S-8204B Series

BATTERY PROTECTION IC FOR 3-SERIES OR 4-SERIES CELL PACK

www.ablic.com

© ABLIC Inc., 2008-2016

Rev.3.9_01

The S-8204B Series includes high-accuracy voltage detection circuits and delay circuits, in single use, makes it possible for users to monitor the status of 3-series or 4-series cell lithium-ion rechargeable battery. By switching the voltage level which is applied to the SEL pin, users are able to use the S-8204B Series either for 3-series or 4-series cell pack.
By cascade connection using the S-8204B Series, it is also possible to protect 6-series or more cells[*1] lithium-ion rechargeable battery pack.

***1.** Refer to the application note for connection examples of protection circuit for 6-series or more cells.
In case of protecting 5-series cell lithium-ion rechargeable battery pack, contact our sales office.

■ Features

- High-accuracy voltage detection function for each cell

Overcharge detection voltage n (n = 1 to 4)	3.65 V to 4.6 V (50 mV step)	Accuracy ±25 mV
Overcharge release voltage n (n = 1 to 4)	3.5 V to 4.6 V[*1]	Accuracy ±50 mV
Overdischarge detection voltage n (n = 1 to 4)	2.0 V to 3.0 V (100 mV step)	Accuracy ±80 mV
Overdischarge release voltage n (n = 1 to 4)	2.0 V to 3.4 V[*2]	Accuracy ±100 mV

- Discharge overcurrent detection in 3-step

Discharge overcurrent detection voltage 1	0.05 V to 0.30 V (50 mV step)	Accuracy ±15 mV
Discharge overcurrent detection voltage 2	0.5 V (fixed)	Accuracy ±100 mV
Load short-circuit detection voltage	1.0 V (fixed)	Accuracy ±300 mV

- Settable by external capacitor; overcharge detection delay time, overdischarge detection delay time, discharge overcurrent detection delay time 1, discharge overcurrent detection delay time 2
  (Load short-circuit detection delay time is internally fixed.)
- Switchable between 3-series and 4-series cell by using the SEL pin
- Independent charge and discharge control by the control pins
- Power-down function "available" / "unavailable" is selectable
- High-withstand voltage: Absolute maximum rating: 24 V
- Wide operation voltage range: 2 V to 22 V
- Wide operation temperature range: Ta = −40°C to +85°C
- Low current consumption

During operation	33 μA max. (Ta = +25°C)
During power-down	0.1 μA max. (Ta = +25°C)

- Lead-free, Sn 100%, halogen-free[*3]

***1.** Overcharge hysteresis voltage n (n = 1 to 4) is selectable in 0 V, or in 0.1 V to 0.4 V in 50 mV step.
(Overcharge hysteresis voltage = Overcharge detection voltage − Overcharge release voltage)
***2.** Overdischarge hysteresis voltage n (n = 1 to 4) is selectable in 0 V, or in 0.2 V to 0.7 V in 100 mV step.
(Overdischarge hysteresis voltage = Overdischarge release voltage − Overdischarge detection voltage)
***3.** Refer to "■ **Product Name Structure**" for details.

■ Application

- Rechargeable lithium-ion battery pack

■ Package

- 16-Pin TSSOP

■ Block Diagram

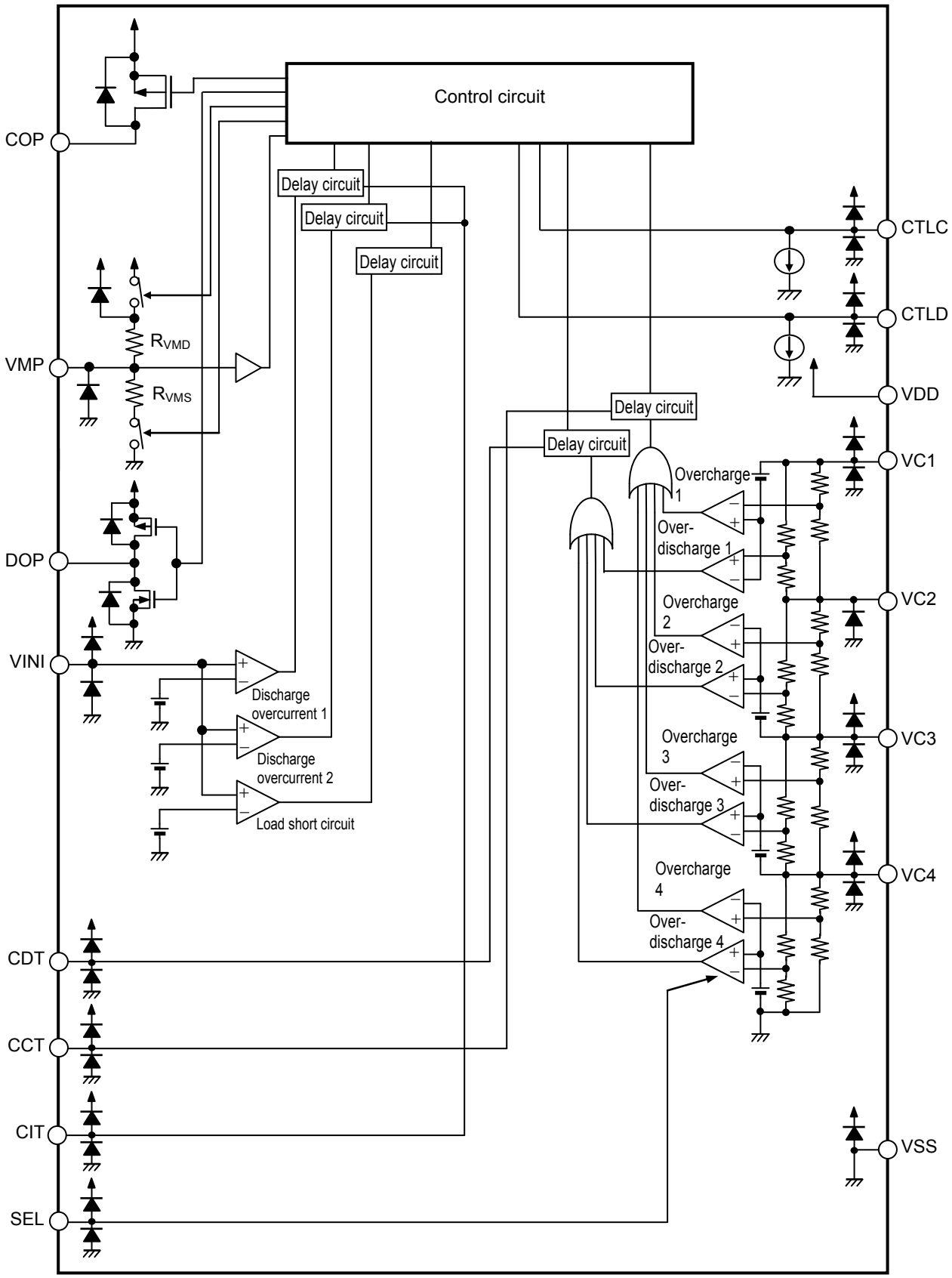

Remark Diodes in the figure are parasitic diodes.

Figure 1

■ Product Name Structure

1. Product name

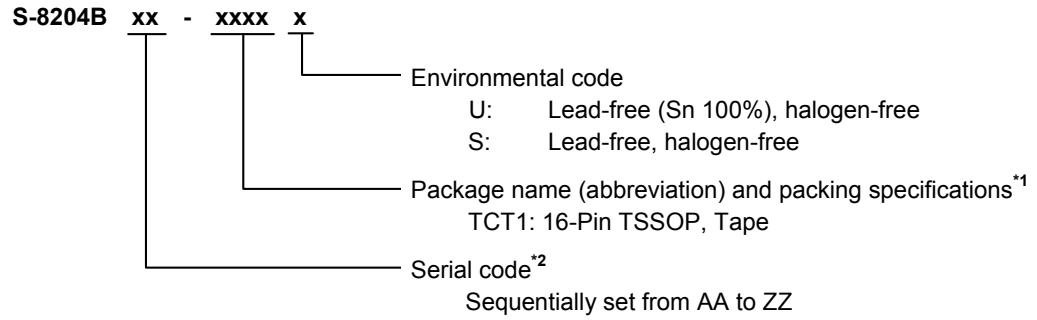

***1.** Refer to the tape drawing.
***2.** Refer to "**3. Product name list**".

2. Package

Table 1 Package Drawing Codes

Package Name		Dimension	Tape	Reel
16-Pin TSSOP	Environmental code = S	FT016-A-P-SD	FT016-A-C-SD	FT016-A-R-SD
	Environmental code = U	FT016-A-P-SD	FT016-A-C-SD	FT016-A-R-S1

3. Product name list

Table 2

Product Name	Overcharge Detection Voltage [V_{CU}]	Overcharge Release Voltage [V_{CL}]	Overdischarge Detection Voltage [V_{DL}]	Overdischarge Release Voltage [V_{DU}]	Discharge Overcurrent Detection Voltage 1 [V_{DIOV1}]	0 V Battery Charge Function	Power-down Function
S-8204BAB-TCT1y	4.350 V	4.150 V	2.00 V	2.70 V	0.250 V	Available	Available
S-8204BAC-TCT1y	4.225 V	4.075 V	2.30 V	3.00 V	0.100 V	Available	Available
S-8204BAD-TCT1y	3.800 V	3.600 V	2.00 V	2.30 V	0.300 V	Available	Available
S-8204BAE-TCT1y	4.350 V	4.150 V	2.50 V	3.00 V	0.250 V	Available	Available
S-8204BAF-TCT1y	4.350 V	4.150 V	2.30 V	3.00 V	0.100 V	Available	Available
S-8204BAG-TCT1y	4.350 V	4.150 V	2.80 V	3.30 V	0.100 V	Available	Available
S-8204BAH-TCT1y	4.200 V	4.000 V	2.60 V	3.00 V	0.100 V	Available	Available
S-8204BAI-TCT1y	3.900 V	3.800 V	2.00 V	2.00 V	0.150 V	Unavailable	Available
S-8204BAJ-TCT1y	4.300 V	4.100 V	2.50 V	2.90 V	0.250 V	Available	Available
S-8204BAK-TCT1y	3.650 V	3.500 V	2.40 V	3.00 V	0.100 V	Available	Available
S-8204BAL-TCT1y	4.200 V	4.100 V	2.70 V	2.90 V	0.250 V	Available	Available
S-8204BAM-TCT1y	4.400 V	4.200 V	2.00 V	2.70 V	0.250 V	Available	Available
S-8204BAN-TCT1y	4.100 V	4.100 V	2.00 V	2.50 V	0.150 V	Unavailable	Available
S-8204BAO-TCT1y	3.900 V	3.600 V	2.50 V	2.70 V	0.100 V	Unavailable	Available
S-8204BAP-TCT1y	4.320 V	4.120 V	2.40 V	3.00 V	0.100 V	Unavailable	Available
S-8204BAQ-TCT1y	3.800 V	3.600 V	2.00 V	2.30 V	0.150 V	Available	Available
S-8204BAR-TCT1y	3.850 V	3.650 V	2.50 V	2.70 V	0.150 V	Available	Available
S-8204BAS-TCT1y	4.250 V	4.150 V	2.80 V	3.00 V	0.150 V	Available	Available
S-8204BAT-TCT1y	3.650 V	3.500 V	2.00 V	2.70 V	0.100 V	Available	Available
S-8204BAU-TCT1y	4.200 V	4.100 V	2.70 V	2.90 V	0.100 V	Available	Available
S-8204BAV-TCT1y	3.900 V	3.600 V	2.00 V	2.70 V	0.100 V	Available	Available
S-8204BAW-TCT1y	3.800 V	3.650 V	2.20 V	2.50 V	0.100 V	Available	Available
S-8204BAX-TCT1y	4.250 V	4.250 V	2.00 V	2.00 V	0.100 V	Unavailable	Available
S-8204BAY-TCT1y	3.900 V	3.600 V	2.30 V	2.50 V	0.100 V	Available	Available
S-8204BAZ-TCT1y	4.250 V	4.100 V	3.00 V	3.30 V	0.100 V	Available	Available
S-8204BBA-TCT1y	4.250 V	4.150 V	2.50 V	3.00 V	0.100 V	Available	Available
S-8204BBB-TCT1y	4.250 V	4.150 V	2.70 V	3.00 V	0.250 V	Unavailable	Available
S-8204BBC-TCT1y	4.250 V	4.100 V	2.80 V	3.20 V	0.250 V	Unavailable	Available
S-8204BBD-TCT1y	4.300 V	4.200 V	2.30 V	3.00 V	0.100 V	Available	Available
S-8204BBE-TCT1y	3.800 V	3.600 V	2.00 V	2.30 V	0.100 V	Available	Available
S-8204BBF-TCT1y	3.800 V	3.600 V	2.00 V	2.30 V	0.050 V	Available	Available
S-8204BBG-TCT1y	4.250 V	4.100 V	2.80 V	3.30 V	0.100 V	Unavailable	Available
S-8204BBH-TCT1y	4.250 V	4.150 V	2.70 V	3.00 V	0.125 V	Unavailable	Available
S-8204BBI-TCT1U	4.250 V	4.150 V	2.70 V	3.00 V	0.125 V	Unavailable	Unavailable
S-8204BBJ-TCT1U	4.250 V	4.150 V	2.70 V	3.00 V	0.150 V	Unavailable	Unavailable
S-8204BBK-TCT1U	4.250 V	4.190 V	2.80 V	3.00 V	0.150 V	Available	Available
S-8204BBL-TCT1U	4.230 V	4.230 V	2.80 V	3.00 V	0.150 V	Available	Available
S-8204BBU-TCT1U	4.350 V	4.150 V	2.30 V	3.00 V	0.100 V	Unavailable	Available
S-8204BBV-TCT1U	4.450 V	4.300 V	2.70 V	3.00 V	0.100 V	Unavailable	Available

Remark 1. Please contact our sales office for products with detection voltage values other than those specified above.
2. y: S or U
3. Please select products of environmental code = U for Sn 100%, halogen-free products.

■ Pin Configuration

1. 16-Pin TSSOP

Top view

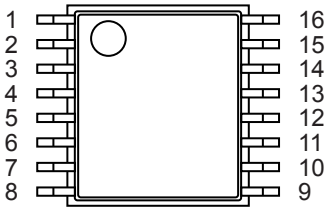

Figure 2

Table 3

Pin No.	Symbol	Description
1	COP	Connection pin of charge control FET gate (Pch open-drain output)
2	VMP	Voltage detection pin between VDD pin and VMP pin
3	DOP	Connection pin of discharge control FET gate (CMOS output)
4	VINI	Voltage detection pin between VSS pin and VINI pin, discharge overcurrent 1 / 2 detection pin, load short-circuit detection pin
5	CDT	Capacitor connection pin for delay for overdischarge detection
6	CCT	Capacitor connection pin for delay for overcharge detection
7	CIT	Capacitor connection pin for delay for discharge overcurrent 1 / 2
8	SEL	Pin for switching 3-series or 4-series cell • V_{SS} level: 3-series cell • V_{DD} level: 4-series cell
9	VSS	Input pin for negative power supply, connection pin for negative voltage of battery 4
10	VC4	Connection pin for negative voltage of battery 3, connection pin for positive voltage of battery 4
11	VC3	Connection pin for negative voltage of battery 2, connection pin for positive voltage of battery 3
12	VC2	Connection pin for negative voltage of battery 1, connection pin for positive voltage of battery 2
13	VC1	Connection pin for positive voltage of battery 1
14	VDD	Input pin for positive power supply, connection pin for positive voltage of battery 1
15	CTLD	Discharge FET control pin
16	CTLC	Charge FET control pin

■ Absolute Maximum Ratings

Table 4

(Ta = +25°C unless otherwise specified)

Item	Symbol	Applied Pin	Absolute Maximum Rating	Unit
Input voltage between VDD pin and VSS pin	V_{DS}	–	V_{SS} – 0.3 to V_{SS} + 24	V
Input pin voltage	V_{IN}	VC1, VC2, VC3, VC4, CTLC, CTLD, SEL, CCT, CDT, CIT, VINI	V_{SS} – 0.3 to V_{DD} + 0.3	V
VMP pin input voltage	V_{VMP}	VMP	V_{SS} – 0.3 to V_{SS} + 24	V
DOP pin output voltage	V_{DOP}	DOP	V_{SS} – 0.3 to V_{DD} + 0.3	V
COP pin output voltage	V_{COP}	COP	V_{DD} – 24 to V_{DD} + 0.3	V
Power dissipation	P_D	–	1100*1	mW
Operation ambient temperature	T_{opr}	–	–40 to +85	°C
Storage temperature	T_{stg}	–	–40 to +125	°C

***1.** When mounted on board
[Mounted board]
(1) Board size: 114.3 mm × 76.2 mm × t1.6 mm
(2) Board name: JEDEC STANDARD51-7

Caution The absolute maximum ratings are rated values exceeding which the product could suffer physical damage. These values must therefore not be exceeded under any conditions.

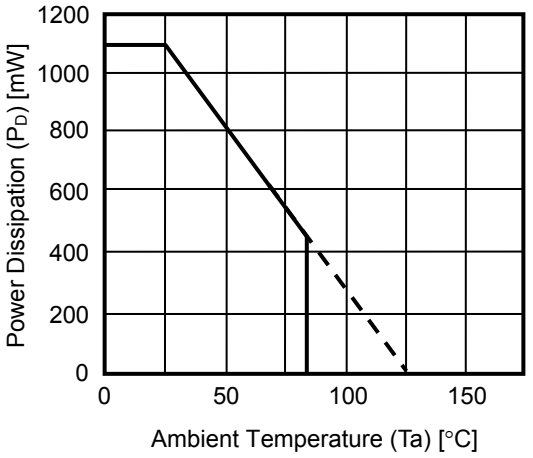

Figure 3 Power Dissipation of Package (When Mounted on Board)

■ Electrical Characteristics

Table 5 (1 / 2)

(Ta = +25°C unless otherwise specified)

Item	Symbol	Condition		Min.	Typ.	Max.	Unit	Test Circuit
Detection Voltage								
Overcharge detection voltage n (n = 1, 2, 3, 4)	V_{CUn}	3.65 V to 4.6 V, adjustable, 50 mV step		V_{CUn} − 0.025	V_{CUn}	V_{CUn} + 0.025	V	2
Overcharge release voltage n (n = 1, 2, 3, 4)	V_{CLn}	3.5 V to 4.6 V, adjustable, 50 mV step	$V_{CL} \neq V_{CU}$	V_{CLn} − 0.05	V_{CLn}	V_{CLn} + 0.05	V	2
			$V_{CL} = V_{CU}$	V_{CLn} − 0.025	V_{CLn}	V_{CLn} + 0.025	V	2
Overdischarge detection voltage n (n = 1, 2, 3, 4)	V_{DLn}	2.0 V to 3.0 V, adjustable, 100 mV step		V_{DLn} − 0.08	V_{DLn}	V_{DLn} + 0.08	V	2
Overdischarge release voltage n (n = 1, 2, 3, 4)	V_{DUn}	2.0 V to 3.4 V, adjustable, 100 mV step	$V_{DL} \neq V_{DU}$	V_{DUn} − 0.10	V_{DUn}	V_{DUn} + 0.10	V	2
			$V_{DL} = V_{DU}$	V_{DUn} − 0.08	V_{DUn}	V_{DUn} + 0.08	V	2
Discharge overcurrent detection voltage 1	V_{DIOV1}	0.05 V to 0.30 V, adjustable		V_{DIOV1} − 0.015	V_{DIOV1}	V_{DIOV1} + 0.015	V	2
Discharge overcurrent detection voltage 2	V_{DIOV2}	−		0.4	0.5	0.6	V	2
Load short-circuit detection voltage	V_{SHORT}	−		0.7	1.0	1.3	V	2
Temperature coefficient 1*1	T_{COE1}	Ta = 0°C to 50°C*3		−1.0	0	1.0	mV/°C	2
Temperature coefficient 2*2	T_{COE2}	Ta = 0°C to 50°C*3		−0.5	0	0.5	mV/°C	2
Delay Time Function*4								
CCT pin internal resistance	R_{INC}	V1 = 4.7 V, V2 = V3 = V4 = 3.5 V		6.15	8.31	10.2	MΩ	3
CDT pin internal resistance	R_{IND}	V1 = 1.5 V, V2 = V3 = V4 = 3.5 V		615	831	1020	kΩ	3
CIT pin internal resistance 1	R_{INI1}	V1 = V2 = V3 = V4 = 3.5 V		123	166	204	kΩ	3
CIT pin internal resistance 2	R_{INI2}	V1 = V2 = V3 = V4 = 3.5 V		12.3	16.6	20.4	kΩ	3
CCT pin detection voltage	V_{CCT}	V_{DS} = 15.2 V, V1 = 4.7 V, V2 = V3 = V4 = 3.5 V		V_{DS} × 0.68	V_{DS} × 0.70	V_{DS} × 0.72	V	3
CDT pin detection voltage	V_{CDT}	V_{DS} = 12.0 V, V1 = 1.5 V, V2 = V3 = V4 = 3.5 V		V_{DS} × 0.68	V_{DS} × 0.70	V_{DS} × 0.72	V	3
CIT pin detection voltage	V_{CIT}	V_{DS} = 14.0 V, V1 = V2 = V3 = V4 = 3.5 V		V_{DS} × 0.68	V_{DS} × 0.70	V_{DS} × 0.72	V	3
Load short-circuit detection delay time	t_{SHORT}	FET gate capacitance = 2000 pF		100	300	600	μs	3
0 V Battery Charge Function								
0 V battery charge starting voltage	V_{0CHA}	0 V battery charge function "available"		−	1.2	2.0	V	2
0 V battery charge inhibition battery voltage	V_{0INH}	0 V battery charge function "unavailable"		0.4	0.7	1.1	V	2
Internal Resistance								
Resistance between VMP pin and VDD pin	R_{VMD}	−		0.5	1	1.5	MΩ	4
Resistance between VMP pin and VSS pin	R_{VMS}	With power-down function		450	900	1800	kΩ	4

Table 5 (2 / 2)

(Ta = +25°C unless otherwise specified)

Item	Symbol	Condition	Min.	Typ.	Max.	Unit	Test Circuit
Input Voltage							
Operation voltage between VDD pin and VSS pin	V_{DSOP}	Fixed output voltage of DOP pin and COP pin	2	–	22	V	2
CTLC pin input voltage "H"	V_{CTLCH}	V1 = V2 = V3 = V4 = 3.5 V	–	–	13.2	V	2
CTLC pin input voltage "L"	V_{CTLCL}	V1 = V2 = V3 = V4 = 3.5 V	10.1	–	–	V	2
CTLD pin input voltage "H"	V_{CTLDH}	V1 = V2 = V3 = V4 = 3.5 V	–	–	13.2	V	2
CTLD pin input voltage "L"	V_{CTLDL}	V1 = V2 = V3 = V4 = 3.5 V	10.1	–	–	V	2
SEL pin input voltage "H"	V_{SELH}	V_{DS} = 14.0 V, V1 = V2 = V3 = V4 = 3.5 V	V_{DS} × 0.8	–	–	V	2
SEL pin input voltage "L"	V_{SELL}	V_{DS} = 14.0 V, V1 = V2 = V3 = V4 = 3.5 V	–	–	V_{DS} × 0.2	V	2
Input Current							
Current consumption during operation	I_{OPE}	V1 = V2 = V3 = V4 = 3.5 V	–	15	33	μA	1
Current consumption during power-down	I_{PDN}	With power-down function, V1 = V2 = V3 = V4 = 1.5 V	–	–	0.1	μA	1
Current consumption during overdischarge	I_{OPED}	Without power-down function, V1 = V2 = V3 = V4 = 1.5 V	–	14	32	μA	1
VC1 pin current	I_{VC1}	V1 = V2 = V3 = V4 = 3.5 V	0.5	1.5	3.0	μA	4
VC2 pin current	I_{VC2}	V1 = V2 = V3 = V4 = 3.5 V	–0.3	0	0.3	μA	4
VC3 pin current	I_{VC3}	V1 = V2 = V3 = V4 = 3.5 V	–0.3	0	0.3	μA	4
VC4 pin current	I_{VC4}	V1 = V2 = V3 = V4 = 3.5 V	–0.3	0	0.3	μA	4
CTLC pin current "H"	I_{CTLCH}	V1 = V2 = V3 = V4 = 3.5 V, V_{CTLC} = V_{DD}	0.4	0.6	0.8	μA	4
CTLC pin current "L"	I_{CTLCL}	V1 = V2 = V3 = V4 = 3.5 V, maximum current flowing from CTLC pin	–20.0	–10.0	–3.0	μA	4
CTLD pin current "H"	I_{CTLDH}	V1 = V2 = V3 = V4 = 3.5 V, V_{CTLD} = V_{DD}	0.4	0.6	0.8	μA	4
CTLD pin current "L"	I_{CTLDL}	V1 = V2 = V3 = V4 = 3.5 V, maximum current flowing from CTLD pin	–20.0	–10.0	–3.0	μA	4
SEL pin current "H"	I_{SELH}	V1 = V2 = V3 = V4 = 3.5 V, V_{SEL} = V_{DD}	–	–	0.1	μA	4
SEL pin current "L"	I_{SELL}	V1 = V2 = V3 = V4 = 3.5 V, V_{SEL} = V_{SS}	–0.1	–	–	μA	4
Output Current							
COP pin source current	I_{COH}	V_{COP} = V_{DD} − 0.5 V	10	–	–	μA	4
COP pin leakage current	I_{COL}	V_{COP} = 0 V	–	–	0.1	μA	4
DOP pin source current	I_{DOH}	V_{DOP} = V_{DD} − 0.5 V	10	–	–	μA	4
DOP pin sink current	I_{DOL}	V_{DOP} = V_{SS} + 0.5 V	10	–	–	μA	4

***1.** Voltage temperature coefficient 1: Overcharge detection voltage

***2.** Voltage temperature coefficient 2: Discharge overcurrent detection voltage 1

***3.** Since products are not screened at high and low temperature, the specification for this temperature range is guaranteed by design, not tested in production.

***4.** Details of delay time function is described in "■ **Operation**".

■ Test Circuit

This chapter describes how to test the S-8204B Series. In case of selecting to use it for 4-series cell battery, set SEL pin = V_{DD}. For 3-series cell battery, set SEL pin = V_{SS} and short between the VC4 pin and the VSS pin.

1. Current consumption during operation and power-down (Test circuit 1)

1. 1 Current consumption during operation (I_{OPE})

The current at the VSS pin when V1 = V2 = V3 = V4 = 3.5 V and V_{VMP} = V_{DD} is the current consumption during operation (I_{OPE}).

1. 2 Current Consumption during power-down (I_{PDN}) (with power-down function)

The current at the VSS pin when V1 = V2 = V3 = V4 = 1.5 V and V_{VMP} = V_{SS} is the current consumption during power-down (I_{PDN}).

1. 3 Current consumption during overdischarge (I_{OPED}) (without power-down function)

The current at the VSS pin when V1 = V2 = V3 = V4 = 1.5 V and V_{VMP} = V_{SS} is the current consumption during overdischarge (I_{OPED}).

2. Overcharge detection voltage, overcharge release voltage, overdischarge detection voltage, overdischarge release voltage, discharge overcurrent detection voltage 1, discharge overcurrent detection voltage 2, load short-circuit detection voltage, CTLC pin input voltage "H", CTLC pin input voltage "L", CTLD pin input voltage "H", CTLD pin input voltage "L", SEL pin input voltage "H", SEL pin input voltage "L" (Test circuit 2)

Confirm both the COP pin and the DOP pin are in "H" (its voltage level is $V_{DS} \times 0.9$ V or more) after setting V_{VMP} = V_{SEL} = V_{CTLC} = V_{CTLD} = V_{DD}, V_{VINI} = V_{SS}, CCT pin = Open, CDT pin = Open, CIT pin = Open, V1 = V2 = V3 = V4 = 3.5 V. (This status is referred to as initial status.)

2. 1 Overcharge detection voltage (V_{CU1}), overcharge release voltage (V_{CL1})

The overcharge detection voltage (V_{CU1}) is a voltage at V1; when the COP pin's voltage is set to "L" (its voltage level is $V_{DD} \times 0.1$ V or less) after increasing a voltage at V1 gradually from the initial status. After that, decreasing a voltage at V1 gradually, a voltage at V1 when the COP pin's voltage is set to "H"; is the overcharge release voltage (V_{CL1}).

2. 2 Overdischarge detection voltage (V_{DL1}), overdischarge release voltage (V_{DU1})

The overdischarge detection voltage (V_{DL1}) is a voltage at V1; when the DOP pin's voltage is set to "L" after decreasing a voltage at V1 gradually from the initial status. After that, increasing a voltage at V1 gradually, a voltage at V1 when the DOP pin's voltage is set to "H"; is the overdischarge release voltage (V_{DU1}).

By changing the voltage at Vn (n = 2 to 4), users can define the overcharge detection voltage (V_{CUn}), the overcharge release voltage (V_{CLn}), the overdischarge detection voltage (V_{DLn}), the overdischarge release voltage (V_{DUn}) as well when n = 1.

2. 3 Discharge overcurrent detection voltage 1 (V_{DIOV1})

The discharge overcurrent detection voltage 1 (V_{DIOV1}) is the VINI pin's voltage; when the DOP pin's voltage is set to "L" after increasing the VINI pin's voltage gradually from the initial status.

2. 4 Discharge overcurrent detection voltage 2 (V_{DIOV2})

The discharge overcurrent detection voltage 2 (V_{DIOV2}) is a voltage at the VINI pin; when a flowing current from the CIT pin reaches 500 μA or more after increasing the VINI pin's voltage gradually from the initial status.

2. 5 Load short-circuit detection voltage (V_{SHORT})

The load short-circuit detection voltage (V_{SHORT}) is the VINI pin's voltage; when the DOP pin's voltage is set to "L" after increasing the VINI pin's voltage gradually after setting the CIT pin's voltage V_{SS} level from the initial status.

2. 6 CTLC pin input voltage "H" (V_{CTLCH}), CTLC pin input voltage "L" (V_{CTLCL})

The CTLC pin input voltage "L" (V_{CTLCL}) is the CTLC pin's voltage; when the COP pin's voltage is set to "L" after decreasing the CTLC pin's voltage gradually from the initial status. After that, increasing the CTLC pin's voltage gradually, the CTLC pin's voltage when the COP pin's voltage is set to "H"; is the CTLC pin input voltage "H" (V_{CTLCH}).

2. 7 CTLD pin input voltage "H" (V_{CTLDH}), CTLD pin input voltage "L" (V_{CTLDL})

The CTLD pin input voltage "L" (V_{CTLDL}) is the CTLD pin's voltage; when the DOP pin's voltage is set to "L" after decreasing the CTLD pin's voltage gradually from the initial status. After that, increasing the CTLD pin's voltage gradually, the CTLD pin's voltage when the DOP pin's voltage is set to "H"; is the CTLD pin input voltage "H" (V_{CTLDH}).

2. 8 SEL pin input voltage "H" (V_{SELH}), SEL pin input voltage "L" (V_{SELL})

Start from the initial status, set V4 = 0 V. Confirm the DOP pin is in "L". After that, decreasing the SEL pin's voltage gradually, the SEL pin's voltage when the DOP pin's voltage is set to "H"; is the SEL pin input voltage "L" (V_{SELL}). After that, increasing the SEL pin's voltage gradually, the SEL pin's voltage when the DOP pin's voltage is set to "L"; is the SEL pin input voltage "H" (V_{SELH}).

3. CCT pin internal resistance, CDT pin internal resistance, CIT pin internal resistance 1, CIT pin internal resistance 2, CCT pin detection voltage, CDT pin detection voltage, CIT pin detection voltage, load short-circuit detection delay time (Test circuit 3)

Confirm both the COP pin and the DOP pin are in "H" (its voltage level is $V_{DS} \times 0.9$ V or more) after setting V_{VMP} = V_{SEL} = V_{CTLC} = V_{CTLD} = V_{DD}, V_{VINI} = CCT = CDT = CIT = V_{SS}, V1 = V2 = V3 = V4 = 3.5 V. (This status is referred to as initial status.)

3. 1 CCT pin internal resistance (R_{INC})

The CCT pin internal resistance (R_{INC}) is $R_{INC} = V_{DS} / I_{CCT}$, I_{CCT} is the current which flows from the CCT pin when setting V1 = 4.7 V from the initial status.

3. 2 CDT pin internal resistance (R_{IND})

The CDT pin internal resistance (R_{IND}) is $R_{IND} = V_{DS} / I_{CDT}$, I_{CDT} is the current which flows from the CDT pin when setting V1 = 1.5 V from the initial status.

3. 3 CIT pin internal resistance 1 (R_{INI1})

The CIT pin internal resistance 1 (R_{INI1}) is $R_{INI1} = V_{DS} / I_{CIT1}$, I_{CIT1} is the current which flows from the CIT pin when setting $V_{VINI} = V_{DIOV1}$ max. + 0.05 V from the initial status.

3. 4 CIT pin internal resistance 2 (R_{INI2})

The CIT pin internal resistance 2 (R_{INI2}) is $R_{INI2} = V_{DS} / I_{CIT2}$, I_{CIT2} is the current which flows from the CIT pin when setting $V_{VINI} = V_{DIOV2}$ max. + 0.05 V from the initial status.

3. 5 CCT pin detection voltage (V_{CCT})

The CCT pin detection voltage (V_{CCT}) is the voltage at the CCT pin when the COP pin's voltage is set to "L" (voltage $V_{DS} \times 0.1$ V or less) after increasing the CCT pin's voltage gradually, after setting V1 = 4.7 V from the initial status.

3. 6 CDT pin detection voltage (V_{CDT})

The CDT pin detection voltage (V_{CDT}) is the voltage at the CDT pin when the DOP pin's voltage is set to "L" (voltage $V_{DS} \times 0.1$ V or less) after increasing the CDT pin's voltage gradually, after setting V1 = 1.5 V from the initial status.

3. 7 CIT pin detection voltage (V_{CIT})

The CIT pin detection voltage (V_{CIT}) is the voltage at the CIT pin when the DOP pin's voltage is set to "L" (voltage $V_{DS} \times 0.1$ V or less) after increasing the CIT pin's voltage gradually, after setting $V_{VINI} = V_{DIOV1}$ max. + 0.05 V from the initial status.

3. 8 Load short-circuit detection delay time (t_{SHORT})

Load short-circuit detection delay time (t_{SHORT}) is a period in which the VINI pin's voltage changes from "H" to "L" by changing the VINI pin's voltage instantaneously from the initial status to V_{SHORT} max. + 0.05 V.

4. 0 V battery charge starting voltage (0 V battery charge function "available"), 0 V battery charge inhibition battery voltage (0 V battery charge function "unavailable") (Test circuit 2)

Confirm both COP pin and DOP pin are in "H" (its voltage level is $V_{DS} \times 0.9$ V or more) after setting $V_{VMP} = V_{SEL} = V_{CTLC} = V_{CTLD} = V_{DD}$, $V_{VINI} = V_{SS}$, CCT pin = Open, CDT pin = Open, CIT pin = Open, V1 = V2 = V3 = V4 = 3.5 V. (This status is referred to as initial status.)

According to user's selection of the function to charge 0 V battery, either function of voltage for start charging 0 V battery or battery voltage for inhibit charging 0 V battery is applied to each product.

4. 1 0 V battery charge starting voltage (V_{0CHA}) (0 V battery charge function "available")

0 V battery charge starting voltage (V_{0CHA}) is a voltage at V1; when a voltage at the COP pin is set to "H" after increasing a voltage at V1 gradually, after setting V1 = V2 = V3 = V4 = 0 V from the initial status.

4. 2 0 V battery charge inhibition battery voltage (V_{0INH}) (0 V battery charge function "unavailable")

0 V battery charge inhibition battery voltage (V_{0INH}) is a voltage at V1; when a voltage at the COP pin is set to "L" after decreasing a voltage at V1 gradually from the initial status.

5. Resistance between VMP pin and VDD pin, resistance between VMP pin and VSS pin, VC1 pin current, VC2 pin current, VC3 pin current, VC4 pin current, CTLC pin current "H", CTLC pin current "L", CTLD pin current "H", CTLD pin current "L", SEL pin current "H", SEL pin current "L", COP pin source current, COP pin leakage current, DOP pin source current, DOP pin sink current (Test circuit 4)

Set $V_{CTLC} = V_{CTLD} = V_{VMP} = V_{SEL} = V_{DD}$, $V_{VINI} = V_{SS}$, V1 = V2 = V3 = V4 = 3.5 V, set other pins open. (This status is referred to as initial status.)

5. 1 Resistance between VMP pin and VDD pin (R_{VMD})

The value of resistance between VMP pin and VDD pin (R_{VMD}) can be defined by $R_{VMD} = V_{DS} / I_{VMD}$ by using the VMP pin's current (I_{VMD}) when $V_{VINI} = 1.5$ V and $V_{VMP} = V_{SS}$ after the initial status.

5. 2 Resistance between VMP pin and VSS pin (R_{VMS})

The value of resistance between VMP pin and VSS pin (R_{VMS}) can be defined by $R_{VMS} = V_{DS} / I_{VMS}$ by using the VMP pin's current (I_{VMS}) when V1 = V2 = V3 = V4 = 1.8 V after the initial status.

5. 3 VC1 pin current (I_{VC1}), VC2 pin current (I_{VC2}), VC3 pin current (I_{VC3}), VC4 pin current (I_{VC4})

In the initial status, each current flows in the VC1 pin, VC2 pin, VC3 pin, VC4 pin is the VC1 pin current (I_{VC1}), the VC2 pin current (I_{VC2}), the VC3 pin current (I_{VC3}), the VC4 pin current (I_{VC4}), respectively.

5. 4 CTLC pin current "H" (I_{CTLCH}), CTLC pin current "L" (I_{CTLCL})

In the initial status, a current which flows in the CTLC pin is the CTLC pin current "H" (I_{CTLCH}). After that, decreasing a voltage at the CTLC pin gradually, the maximum current which flows in the CTLC pin is; the CTLC pin current "L" (I_{CTLCL}).

5. 5 CTLD pin current "H" (I_{CTLDH}), CTLD pin current "L" (I_{CTLDL})

In the initial status, a current which flows in the CTLD pin is the CTLD pin current "H" (I_{CTLDH}). After that, decreasing a voltage at the CTLD pin gradually, the maximum current which flows in the CTLD pin is; the CTLD pin current "L" (I_{CTLDL}).

5. 6 SEL pin current "H" (I_{SELH}), SEL pin current "L" (I_{SELL})

In the initial status, a current which flows in the SEL pin is the SEL pin current "H" (I_{SELH}). After that, a current which flows in the SEL pin when setting $V_{SEL} = V_{SS}$ is; the SEL pin current "L" (I_{SELL}).

5. 7 COP pin source current (I_{COH}), COP pin leakage current (I_{COL})

Start from the initial status, set $V_{COP} = V_{DD} - 0.5$ V, a current which flows in the COP pin is the COP pin source current (I_{COH}). After that, a current which flows in the COP pin when setting V1 = V2 = V3 = V4 = 5.5 V, $V_{COP} = V_{SS}$ is; the COP pin leakage current (I_{COL}).

5. 8 DOP pin source current (I_{DOH}), DOP pin sink current (I_{DOL})

Start from the initial status, set $V_{DOP} = V_{DD} - 0.5$ V, a current which flows in the DOP pin is the DOP pin source current (I_{DOH}). After that, a current which flows in the DOP pin when setting V1 = V2 = V3 = V4 = 1.8 V, $V_{DOP} = V_{SS} + 0.5$ V is; the DOP pin sink current (I_{DOL}).

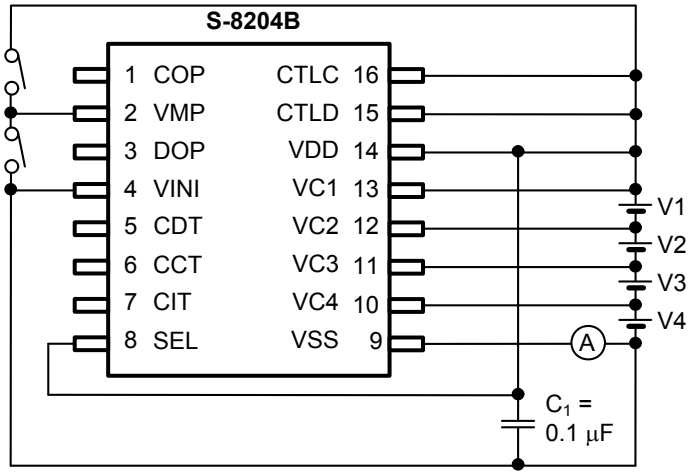

Figure 4 Test Circuit 1

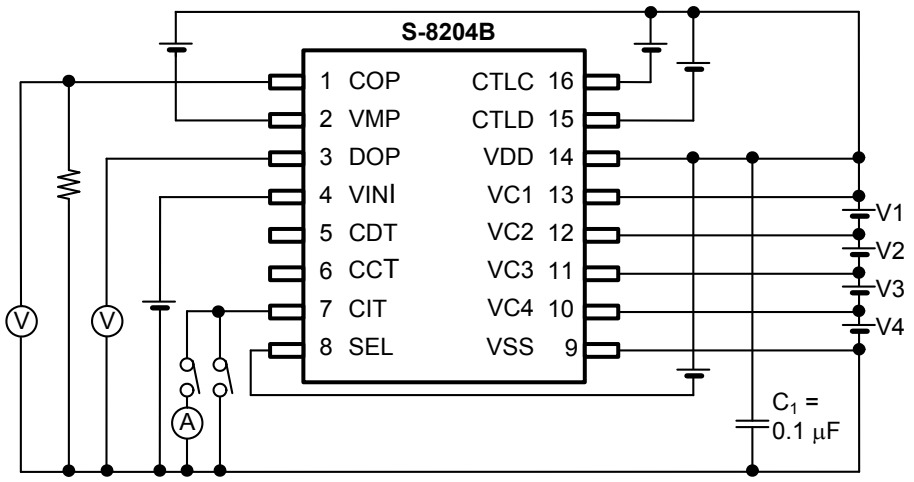

Figure 5 Test Circuit 2

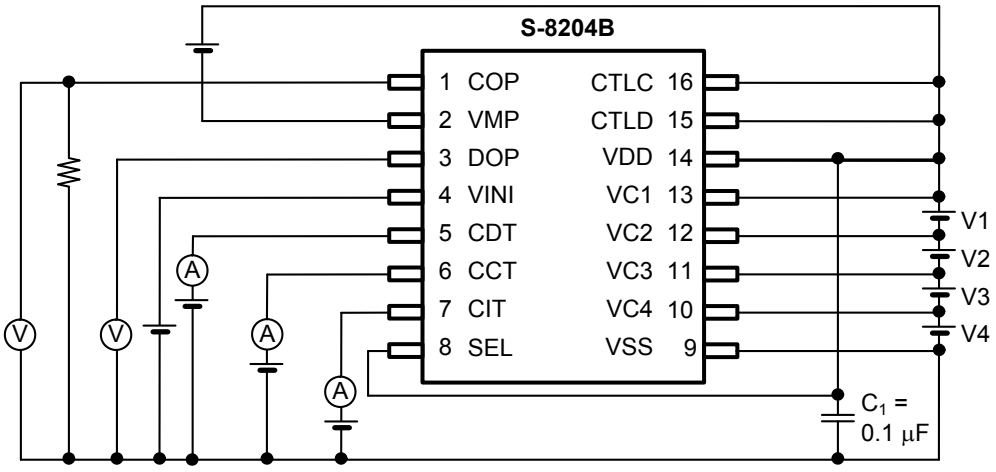

Figure 6 Test Circuit 3

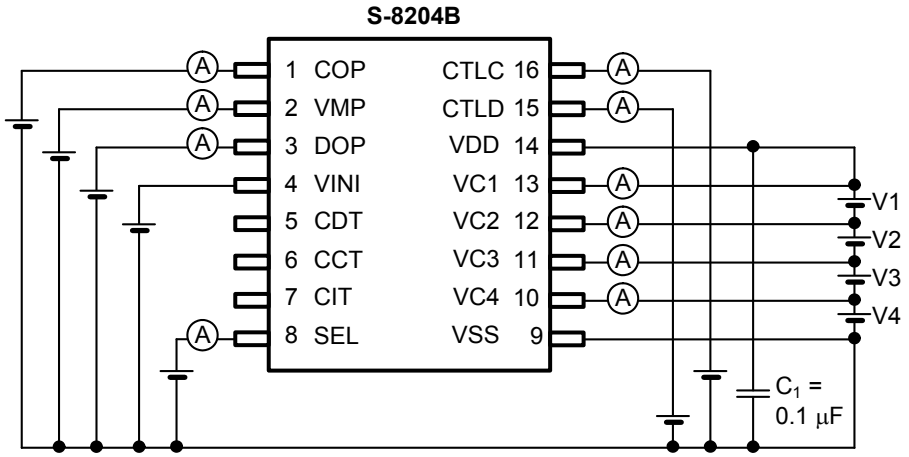

Figure 7 Test Circuit 4

■ Operation

Remark Refer to "■ **Connection Examples of Battery Protection IC**".

1. Normal status

In the S-8204B Series, both of the COP pin and the DOP pin get the V_{DD} level; when the voltage of each of the batteries is in the range of overdischarge detection voltage (V_{DLn}) to overcharge detection voltage (V_{CUn}), and due to the discharge current, the VINI pin's voltage is discharge overcurrent detection voltage (V_{DIOV1}) or less. This is the normal status. At this time, the charge FET and discharge FET are on.

2. Overcharge status

In the S-8204B Series, the voltage of one of the batteries increases to the level of more than V_{CUn}, the COP pin is set in high impedance. This is the overcharge status. The COP pin is pulled down to EB− by an external resistor so that the charge FET is turned off and it stops charging.

This overcharge status is released if either condition mentioned below is satisfied;

(1) In case that the VMP pin voltage is 39 / 40 × V_{DS} or more; the voltage of each of the batteries is in the level of overcharge release voltage (V_{CLn}) or less.
(2) In case that the VMP pin voltage is 39 / 40 × V_{DS} or less; the voltage of each of the batteries is in the level of V_{CUn} or less.

3. Overdischarge status

In the S-8204B Series, when the voltage of one of the batteries decreases to the level of less than V_{DLn}, the DOP pin voltage gets the V_{SS} level. This is the overdischarge status. The discharge FET is turned off and it stops discharging.

This overcharge status is released if either condition mentioned below is satisfied;

(1) To release; the VMP pin voltage is in the level of more than V_{DD}, the voltage of each of the batteries is in the V_{DLn} level or more.
(2) To release; the VMP pin voltage is V_{DS} / 2 or more and the VMP pin voltage is in the level of less than V_{DD}, the voltage of each of the batteries is in the level of overdischarge release voltage (V_{DUn}) or more.

3. 1 Power-down function

In the S-8204B Series, power-down function "available" / "unavailable" is selectable.

3. 1. 1 With power-down function

When the S-8204B Series reaches the overdischarge status, the VMP pin is pulled down to the V_{SS} level by a resistor between the VMP pin and the VSS pin (R_{VMS}). If the VMP pin voltage decreases to the level of V_{DS} / 2 or less, the power-down function starts to operate and almost every circuit in the S-8204B Series stops working.

The power-down function is released if the following condition is satisfied.

(1) The VMP pin voltage gets V_{DS} / 2 or more.

3. 1. 2 Without power-down function

The VMP pin is not pulled down even when the S-8204B Series reaches the overdischarge status. The overdischarge status is maintained even If the VMP pin voltage decreases to the level of V_{DS} / 2 or less, and the current consumption decreases to the level of current consumption during overdischarge (I_{OPED}) or less.

4. Discharge overcurrent status

In the S-8204B Series, in batteries in the normal status, the discharging current increases more than a certain value. As a result, if the status in which the VINI pin voltage increases to the level of V_{DIOV1} or more, the DOP pin gets the V_{SS} level. This is the discharge overcurrent status. At this time, the discharge control FET is turned off and it stops discharging.

The S-8204B Series has three levels for discharge overcurrent detection (V_{DIOV1}, V_{DIOV2}, V_{SHORT}). In the status of discharge overcurrent, the COP pin is set in high impedance. The VMP pin is pulled up to the V_{DD} level by a resistor between the VMP pin and the VDD pin (R_{VMD}).
The S-8204B Series' operations against discharge overcurrent detection voltage 2 (V_{DIOV2}) and load short-circuit detection voltage (V_{SHORT}) are as well in V_{DIOV1}.

The discharge overcurrent status is released if the following condition is satisfied.

(1) The VMP pin voltage gets V_{DS} −1.2 V (typ.) or more.

5. 0 V battery charge function

In the S-8204B Series, regarding how to charge a discharged battery (0 V battery), users are able to select either function mentioned below.

(1) Allow to charge a 0 V battery (enable to charge a 0 V battery)
A 0 V battery is charged when the voltage between the VDD pin and the VSS pin (V_{DS}) is 0 V battery charge starting voltage (V_{0CHA}) or more.

(2) Inhibit charging a 0 V battery (unable to charge a 0 V battery)
A 0 V battery is not charged when the battery voltage is 0 V battery charge inhibition battery voltage (V_{0INH}) or less.

Caution When the VDD pin voltage is less than the minimum value of operation voltage between the VDD pin and the VSS pin (V_{DSOP}), the operation of the S-8204B Series is not assured.

6. Delay time setting

In the S-8204B Series, users are able to set delay time for the period; from detecting the voltage of one of the batteries or detecting changes in the voltage at the VINI pin, to the output to the COP pin and the DOP pin. Each delay time is determined by a resistor in the S-8204B Series and an external capacitor.

In the overchage detection, when the voltage of one of the batteries gets V_{CUn} or more, the S-8204B Series starts charging to the CCT pin's capacitor (C_{CCT}) via the CCT pin's internal resistor (R_{INC}). After a certain period, the COP pin is set in high impedance if the voltage at the CCT pin reaches the CCT pin detection voltage (V_{CCT}). This period is overcharge detection delay time (t_{CU}).

t_{CU} is calculated using the following equation ($V_{DS} = V1 + V2 + V3 + V4$).

$$t_{CU}\ [s] = -\ln (1 - V_{CCT} / V_{DS}) \times C_{CCT}\ [\mu F] \times R_{INC}\ [M\Omega]$$
$$= -\ln (1 - 0.7\ (typ.)) \times C_{CCT}\ [\mu F] \times 8.31\ [M\Omega]\ (typ.)$$
$$= 10.0\ [M\Omega]\ (typ.) \times C_{CCT}\ [\mu F]$$

Overdischarge detection delay time (t_{DL}), discharge overcurrent detection delay time 1 (t_{DIOV1}), discharge overcurrent detection delay time 2 (t_{DIOV2}) are calculated using the following equations as well.

$$t_{DL}\ [ms] = -\ln (1 - V_{CDT} / V_{DS}) \times C_{CDT}\ [\mu F] \times R_{IND}\ [k\Omega]$$
$$t_{DIOV1}\ [ms] = -\ln (1 - V_{CIT} / V_{DS}) \times C_{CIT}\ [\mu F] \times R_{INI1}\ [k\Omega]$$
$$t_{DIOV2}\ [ms] = -\ln (1 - V_{CIT} / V_{DS}) \times C_{CIT}\ [\mu F] \times R_{INI2}\ [k\Omega]$$

In case $C_{CCT} = C_{CDT} = C_{CIT} = 0.1\ [\mu F]$, each delay time t_{CU}, t_{DL}, t_{DIOV1}, t_{DIOV2} is calculated as follows.

$$t_{CU}\ [s] = 10.0\ [M\Omega]\ (typ.) \times 0.1\ [\mu F] = 1.0\ [s]\ (typ.)$$
$$t_{DL}\ [ms] = 1000\ [k\Omega]\ (typ.) \times 0.1\ [\mu F] = 100\ [ms]\ (typ.)$$
$$t_{DIOV1}\ [ms] = 200\ [k\Omega]\ (typ.) \times 0.1\ [\mu F] = 20\ [ms]\ (typ.)$$
$$t_{DIOV2}\ [ms] = 20\ [k\Omega]\ (typ.) \times 0.1\ [\mu F] = 2.0\ [ms]\ (typ.)$$

Load short-circuit detection delay time (t_{SHORT}) is fixed internally.

7. CTLC pin and CTLD pin

The S-8204B Series has two pins to control.
The CTLC pin controls the output voltage from the COP pin, the CTLD pin controls the output voltage from the DOP pin. Thus it is possible for users to control the output voltages from the COP pin and DOP pin independently. These controls precede the battery protection circuit.

Table 6 Conditions Set by CTLC Pin

CTLC Pin	COP Pin
"H"*1	Normal status*4
Open*2	"High-Z"
"L"*3	"High-Z"

***1.** "H"; CTLC ≥ V_{CTLCH}
***2.** Pulled down by I_{CTLCH}
***3.** "L"; CTLC ≤ V_{CTLCL}
***4.** The status is controlled by the voltage detection circuit.

Table 7 Conditions Set by CTLD Pin

CTLD Pin	DOP Pin
"H"*1	Normal status*4
Open*2	V_{SS} level
"L"*3	V_{SS} level

***1.** "H"; CTLD ≥ V_{CTLDH}
***2.** Pulled down by I_{CTLDH}
***3.** "L"; CTLD ≤ V_{CTLDL}
***4.** The status is controlled by the voltage detection circuit.

Caution Note that when the power supply fluctuates, unexpected behavior might occur if an electrical potential is generated between the potentials of "H" level input to the CTLC pin / the CTLD pin and IC's V_{DD} by external filters R_{VDD1} and C_{VDD1}.

8. SEL pin

The S-8204B Series has a pin to switch-control the protection for 3-cell or 4-cell battery.
The overdischarge detection for V4-cell is inhibited by setting the SEL pin "L", so that short-circuiting the V4 cell does not allow the overdischarge detection. This setting makes it possible to use the S-8204B Series for 3-cell protection. The control by this SEL pin precedes the battery protection circuit. Be sure to use the SEL pin in "H" or "L".

Table 8 Conditions Set by SEL Pin

SEL Pin	Condition
"H"*1	4-cell protection
Open	Indefinite
"L"*2	3-cell protection

***1.** "H"; SEL ≥ V_{SELH}
***2.** "L"; SEL ≤ V_{SELL}

In cascade connection, it is possible to use the S-8204B Series for protecting 6-cell, 7-cell or 8-cell battery by combining the electrical level of the SEL pin.

Table 9 Conditions Set by SEL Pin in Cascade Connection

SEL pin in S-8204B (1)	SEL pin in S-8204B (2)	Condition
"L"*1	"L"*1	6-series cell protection
"L"*1	"H"*2	7-series cell protection
"H"*2	"H"*2	8-series cell protection

***1.** "L"; SEL ≤ V_{SELL}
***2.** "H"; SEL ≥ V_{SELH}

■ Timing Chart (Circuit in Figure 11)

1. Overcharge detection and overdischarge detection (with power-down function)

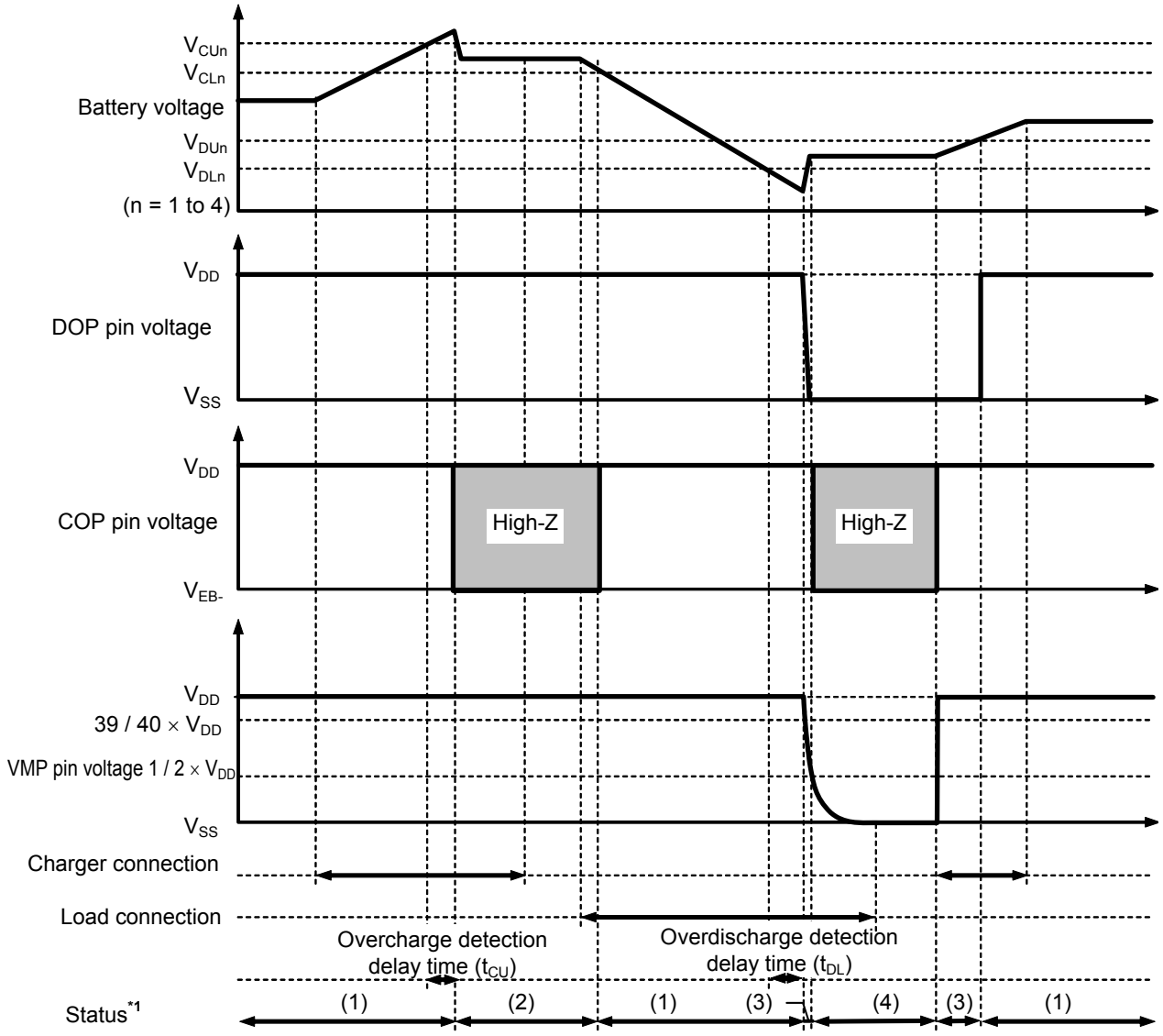

***1.** (1): Normal status
(2): Overcharge status
(3): Overdischarge status
(4): Power-down status

Remark The charger is assumed to charge with a constant current. V_{EB-} indicates the open voltage of the charger.

Figure 8

2. Overcharge detection and overdischarge detection (without power-down function)

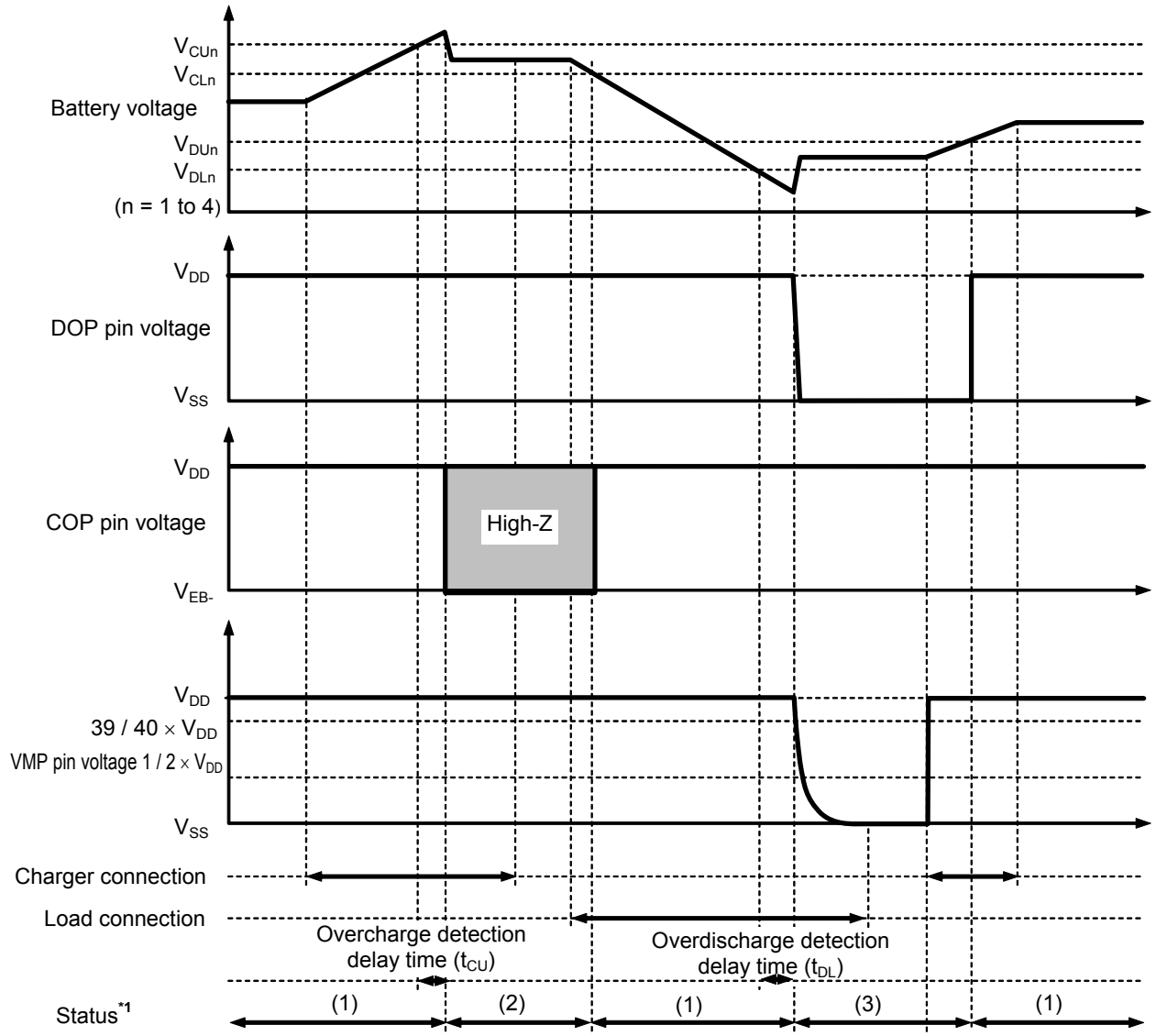

***1.** (1): Normal status
(2): Overcharge status
(3): Overdischarge status

Remark The charger is assumed to charge with a constant current. V_{EB-} indicates the open voltage of the charger.

Figure 9

3. Discharge overcurrent detection

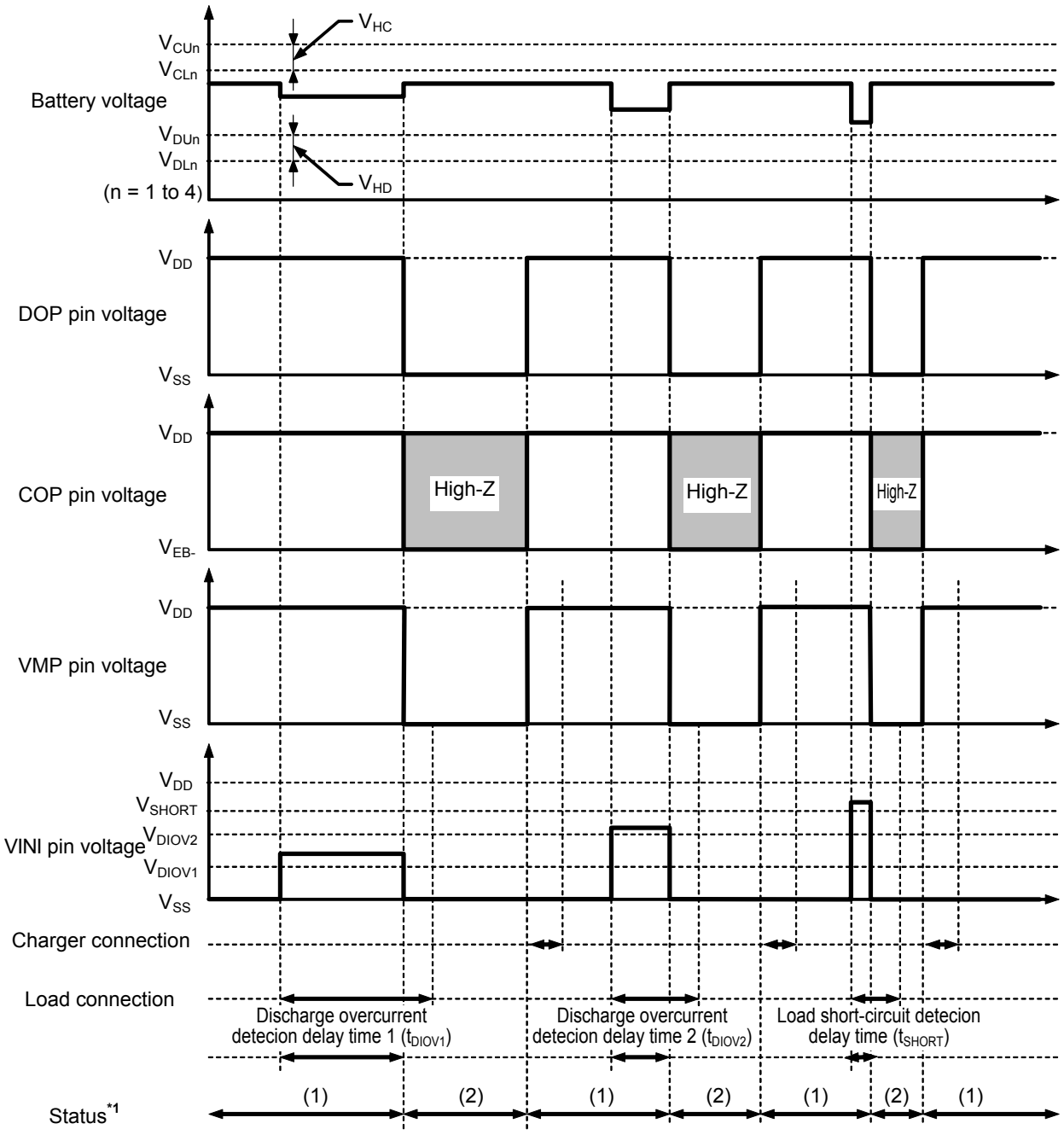

***1.** (1): Normal status
(2): Discharge overcurrent status

Remark The charger is assumed to charge with a constant current. V_{EB-} indicates the open voltage of the charger.

Figure 10

■ Connection Examples of Battery Protection IC

1. 4-series cell (with overcurrent protection function)

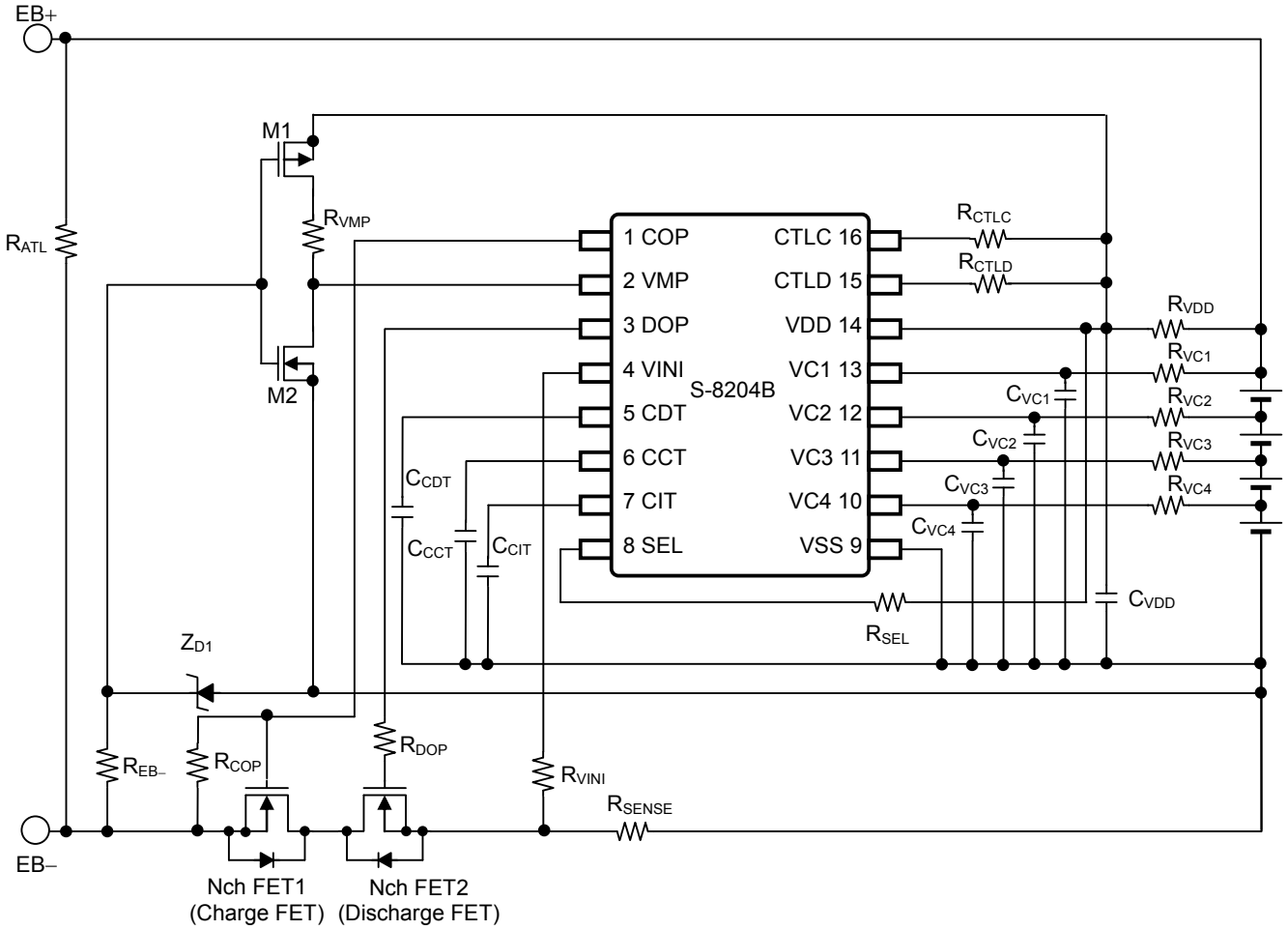

Figure 11

Table 10 Constants for External Components (Circuit in Figure 11)

Symbol	Min.	Typ.	Max.	Unit
R_{VC1} *1	0.51	1	1	kΩ
R_{VC2} *1	0.51	1	1	kΩ
R_{VC3} *1	0.51	1	1	kΩ
R_{VC4} *1	0.51	1	1	kΩ
R_{DOP}	2	5.1	10	kΩ
R_{COP}	0.1	1	1	MΩ
R_{VMP}	1	5.1	10	kΩ
R_{CTLC}	1	1	10	kΩ
R_{CTLD}	1	1	10	kΩ
R_{VINI}	1	1	10	kΩ
R_{SEL}	1	1	100	kΩ
R_{VDD} *1	22	47	100	Ω
C_{VC1} *1	0	47	100	nF
C_{VC2} *1	0	47	100	nF
C_{VC3} *1	0	47	100	nF
C_{VC4} *1	0	47	100	nF
C_{CCT}	0.01	0.1	–	μF
C_{CDT}	0.01	0.1	–	μF
C_{VDD} *1	0	1	2.2	μF
C_{CIT}	–	0.1	–	μF
R_{SENSE}	–	–	–	–
M1	–	–	–	–
M2	–	–	–	–
Z_{D1}	–	–	–	–
R_{EB-}	–	1	–	MΩ
R_{ATL}	–	20	–	MΩ
Nch FET1	–	–	–	–
Nch FET2	–	–	–	–

***1.** Set up a filter constant to be $R_{VDD} \times C_{VDD}$ = 47 μF • Ω or more, and to be $R_{VC1} \times C_{VC1} = R_{VC2} \times C_{VC2} = R_{VC3} \times C_{VC3} = R_{VC4} \times C_{VC4} = R_{VDD} \times C_{VDD}$.

Caution 1. The above constants may be changed without notice.

2. It is recommended that filter constants between the VDD pin and the VSS pin should be set to approximately 47 μF • Ω.

e.g., $C_{VDD} \times R_{VDD}$ = 1.0 μF × 47 Ω = 47 μF • Ω

Sufficient evaluation of transient power supply fluctuation and overcurrent protection function with the actual application is needed to determine the proper constants. Contact our sales office in case the constants should be set to other than 47 μF • Ω.

3. It has not been confirmed whether the operation is normal in circuits other than the above example of connection. In addition, the example of connection shown above and the constants do not guarantee proper operation. Perform thorough evaluation using an actual application to set the constant.

2. 7-series cell (cascade connection without overcurrent protection function)

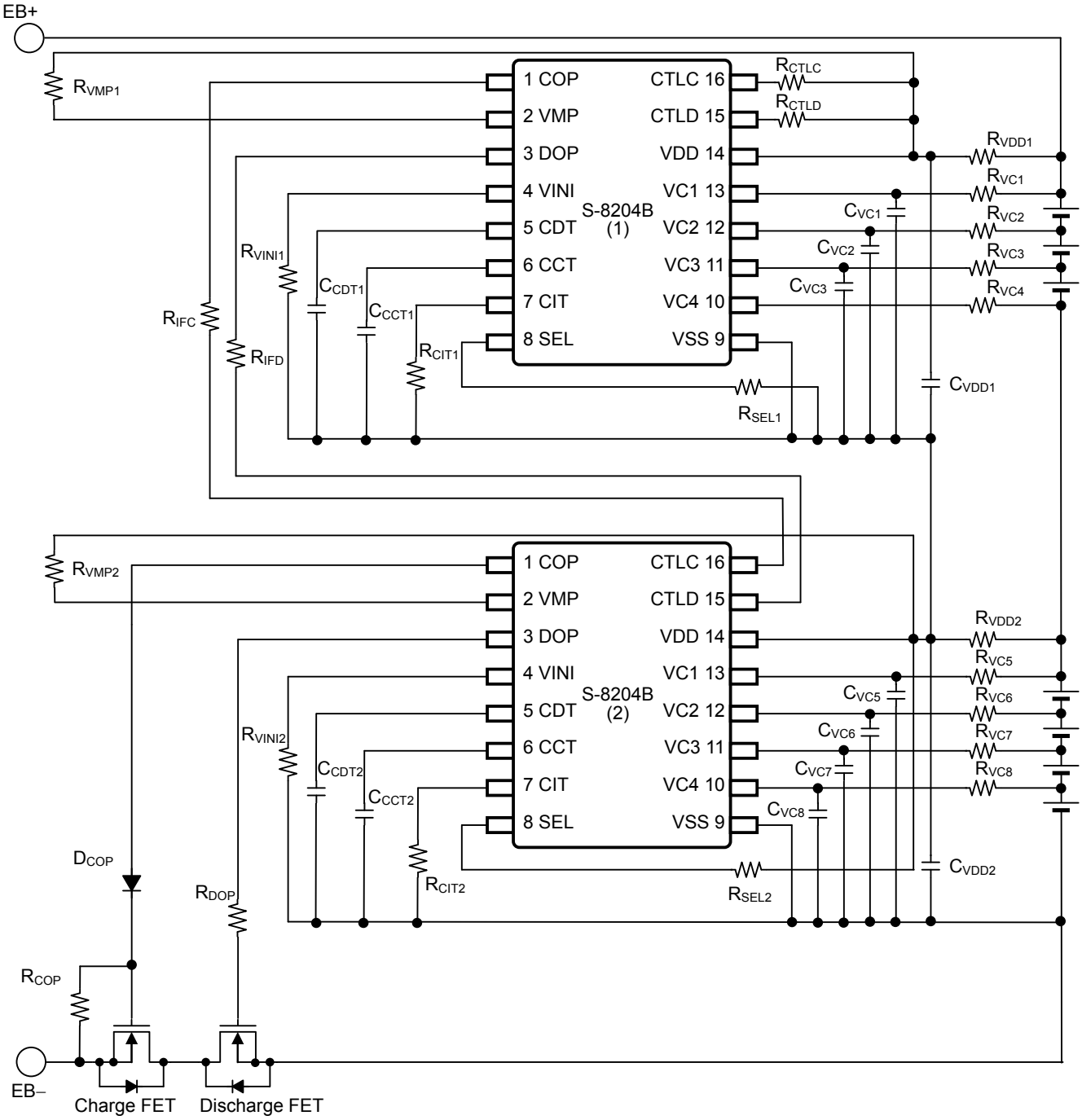

Figure 12

Caution 1. It is recommended that filter constants between the VDD pin and the VSS pin should be set to approximately 47 μF • Ω.

e.g., $C_{VDD} \times R_{VDD}$ = 1.0 μF × 47 Ω = 47 μF • Ω

Sufficient evaluation of transient power supply fluctuation and overcurrent protection function with the actual application is needed to determine the proper constants. Contact our sales office in case the constants should be set to other than 47 μF • Ω.

2. It has not been confirmed whether the operation is normal in circuits other than the above example of connection. In addition, the example of connection shown above and the constants do not guarantee proper operation. Perform thorough evaluation using an actual application to set the constant.

Remark Refer to the application note for constants of each external component.

3. 8-series cell (cascade connection with overcurrent protection function)

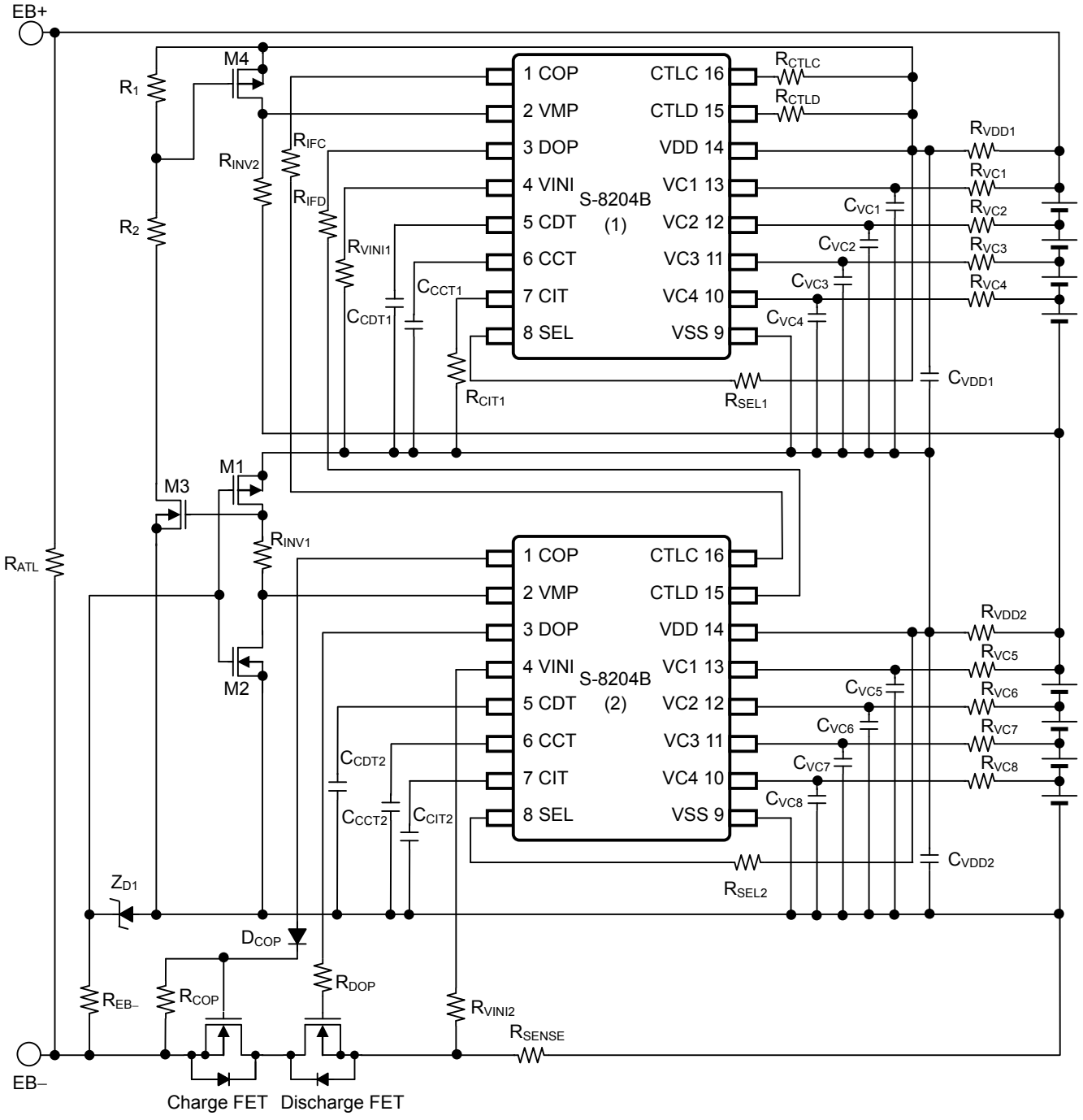

Figure 13

Caution 1. It is recommended that filter constants between the VDD pin and the VSS pin should be set to approximately 47 μF • Ω.

e.g., $C_{VDD} \times R_{VDD}$ = 1.0 μF × 47 Ω = 47 μF • Ω

Sufficient evaluation of transient power supply fluctuation and overcurrent protection function with the actual application is needed to determine the proper constants. Contact our sales office in case the constants should be set to other than 47 μF • Ω.

2. It has not been confirmed whether the operation is normal in circuits other than the above example of connection. In addition, the example of connection shown above and the constants do not guarantee proper operation. Perform thorough evaluation using an actual application to set the constant.

Remark Refer to the application note for constants of each external component.

■ Precautions

- The application conditions for the input voltage, output voltage, and load current should not exceed the package power dissipation.
- Batteries can be connected in any order; however, there may be cases when discharging cannot be performed when a battery is connected. In such a case, short the VMP pin and the VDD pin to return the IC to the normal mode.
- If both an overcharge battery and an overdischarge battery are included among the whole batteries, the condition is set in overcharge status and overdischarge status. Therefore either charging or discharging is impossible.
- Do not apply an electrostatic discharge to this IC that exceeds the performance ratings of the built-in electrostatic protection circuit.
- ABLIC Inc. claims no responsibility for any disputes arising out of or in connection with any infringement by products including this IC of patents owned by a third party.

■ Characteristics (Typical Data)

1. Current consumption

1. 1 I_{OPE} vs. V_{DS}

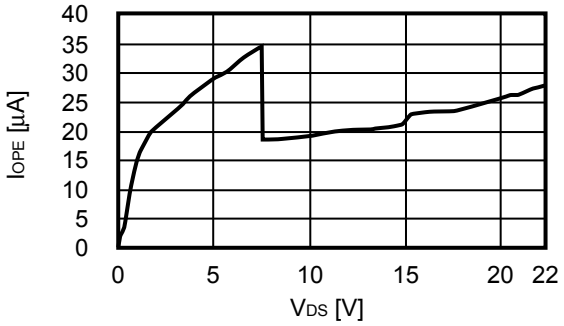

1. 2 I_{OPE} vs. Ta

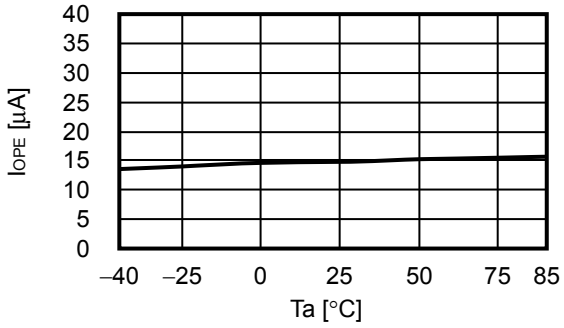

1. 3 I_{PDN} vs. V_{DS}

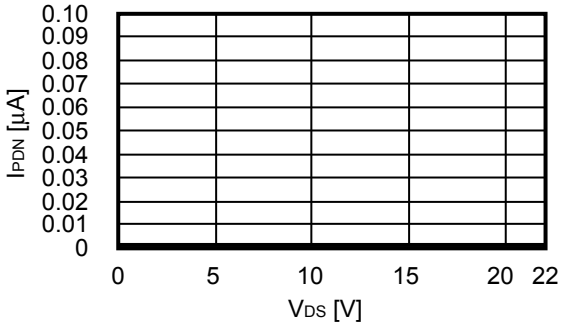

1. 4 I_{PDN} vs. Ta

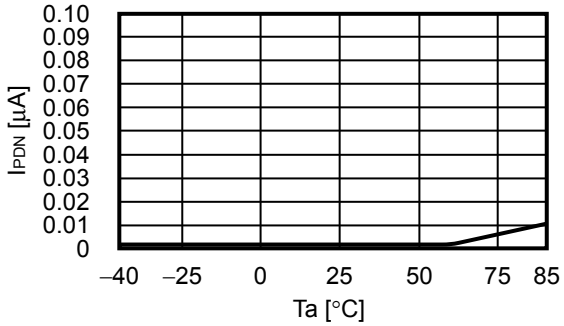

2. Overcharge detection / release voltage, overdischarge detection / release voltage, overcurrent detection voltage

2. 1 V_{CU} vs. Ta

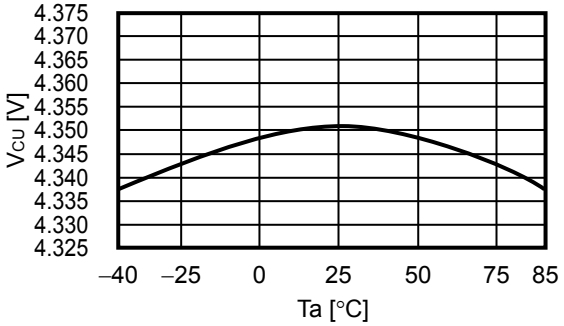

2. 2 V_{CL} vs. Ta

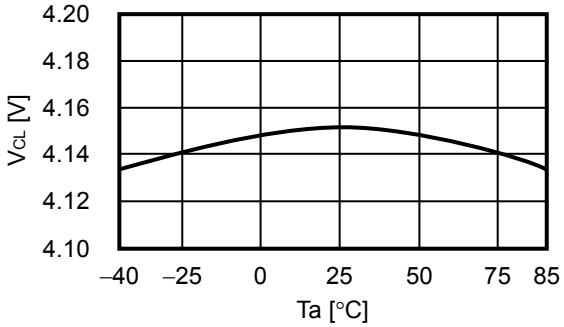

2. 3 V_{DU} vs. Ta

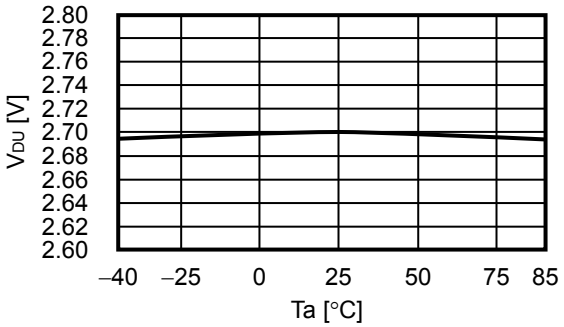

2. 4 V_{DL} vs. Ta

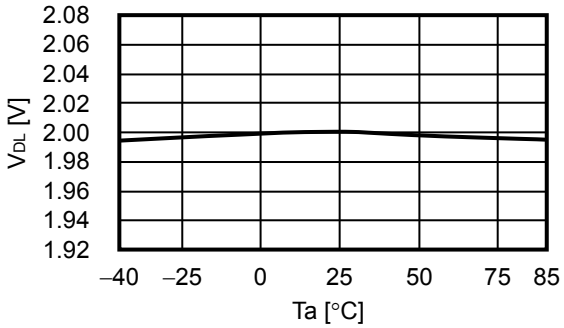

2. 5 V_{DIOV1} vs. V_{DS}

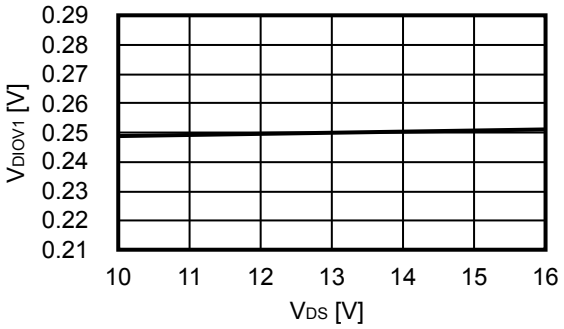

2. 6 V_{DIOV1} vs. Ta

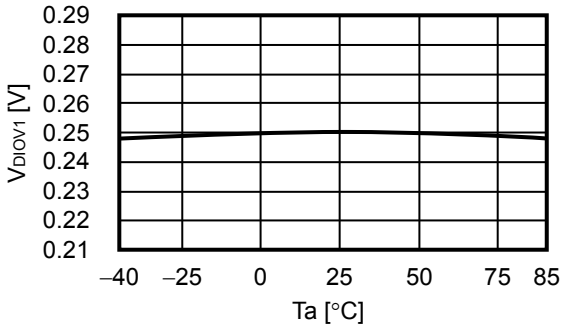

2. 7 V_{DIOV2} vs. V_{DS}

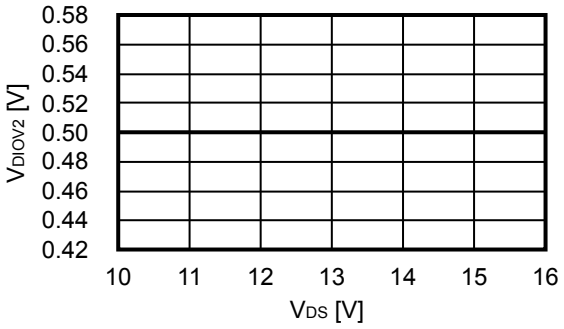

2. 8 V_{DIOV2} vs. Ta

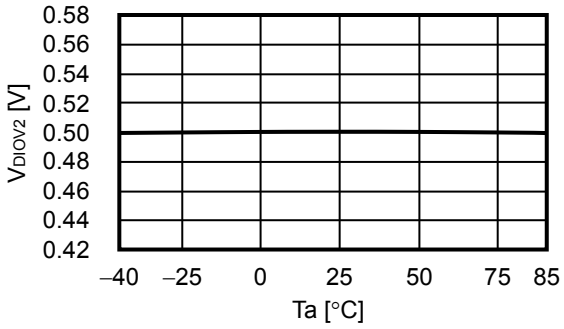

2. 9 V_{SHORT} vs. V_{DS}

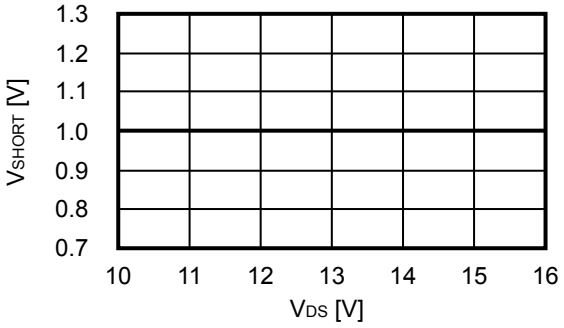

2. 10 V_{SHORT} vs. Ta

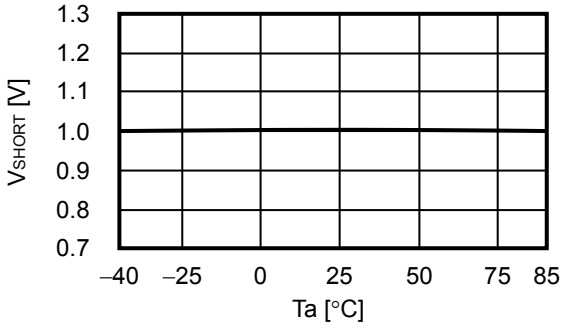

3. CCT pin internal resistance / detection voltage, CDT pin internal resistance / detection voltage, CIT pin internal resistance / detection voltage and load short-circuit detection delay time

3. 1 R_{INC} vs. Ta

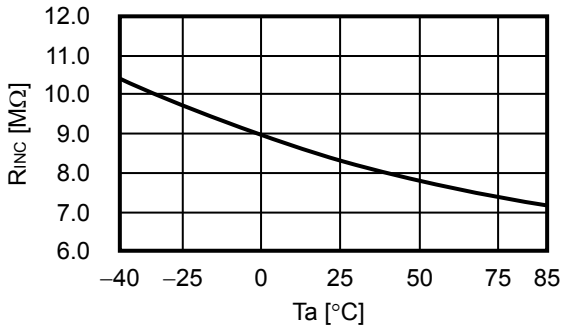

3. 2 V_{CCT} vs. Ta (V_{DS} = 15.2 V)

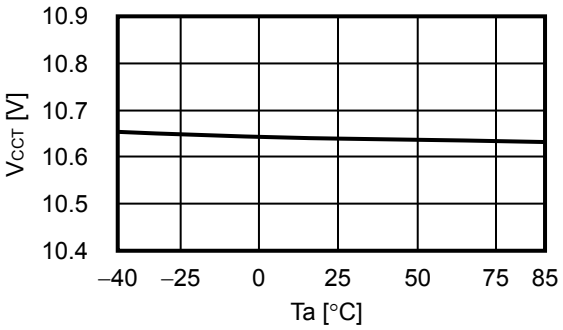

3. 3 R_{IND} vs. Ta

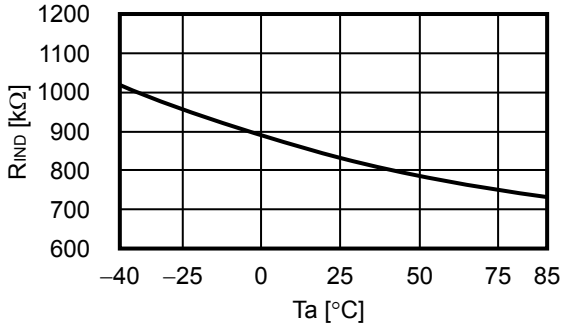

3. 4 V_{CDT} vs. Ta (V_{DS} = 12.0 V)

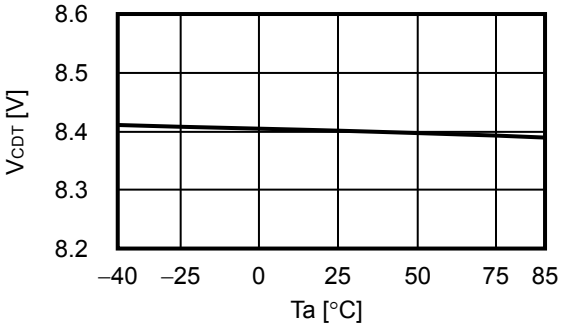

3. 5 R_{INI1} vs. Ta

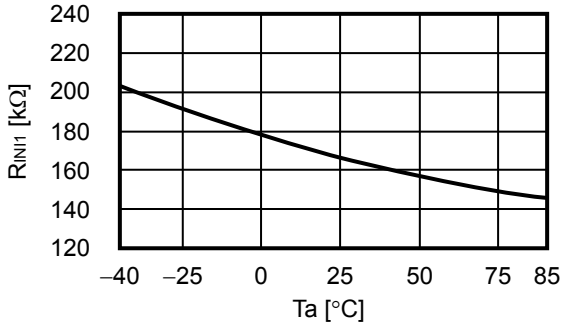

3. 6 V_{CIT} vs. Ta (V_{DS} = 14.0 V)

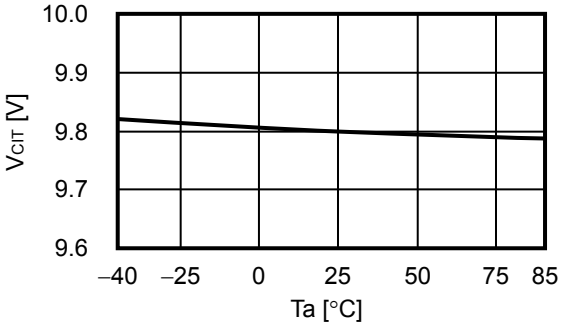

3. 7 R_{INI2} vs. Ta

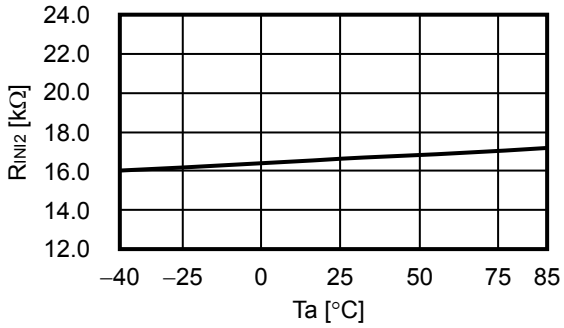

3. 8 t_{SHORT} vs. Ta

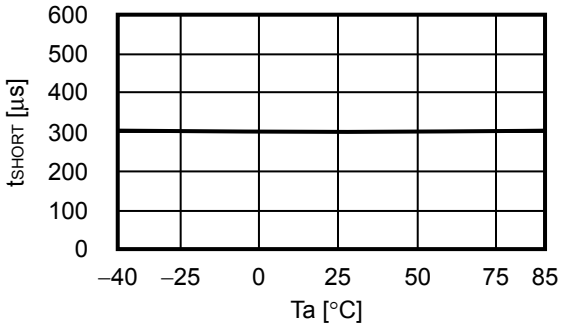

4. COP pin / DOP pin

4. 1 I_{COH} vs. V_{COP}

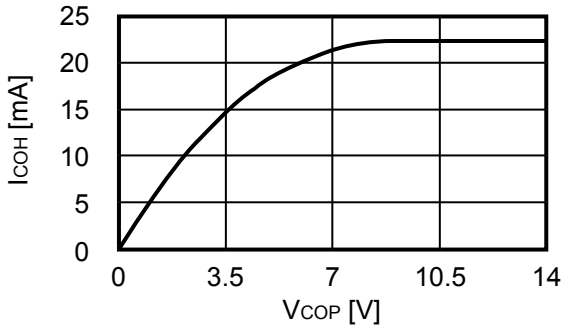

4. 2 I_{COL} vs. V_{COP}

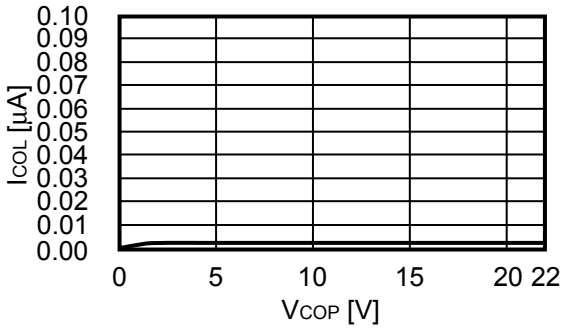

4. 3 I_{DOH} vs. V_{DOP}

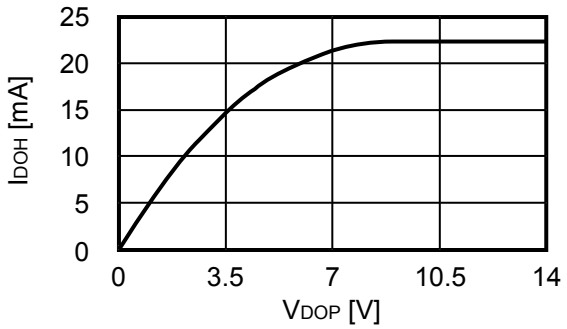

4. 4 I_{DOL} vs. V_{DOP}

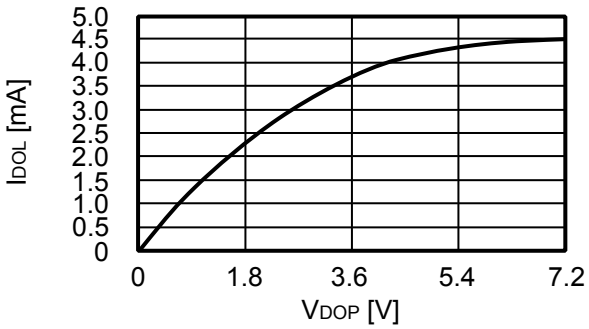

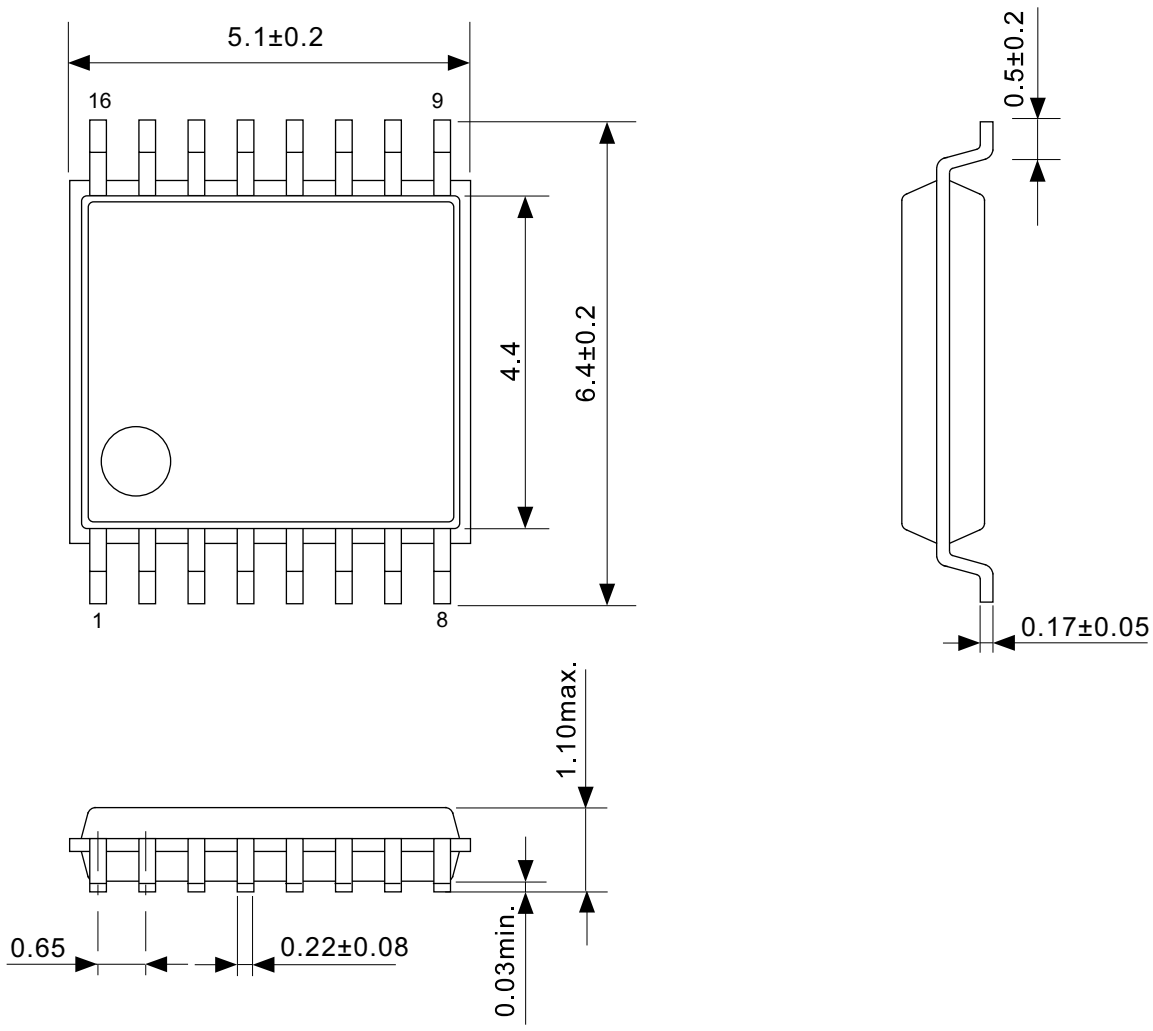

No. FT016-A-P-SD-1.2

TITLE	TSSOP16-A-PKG Dimensions
No.	FT016-A-P-SD-1.2
ANGLE	
UNIT	mm

ABLIC Inc.

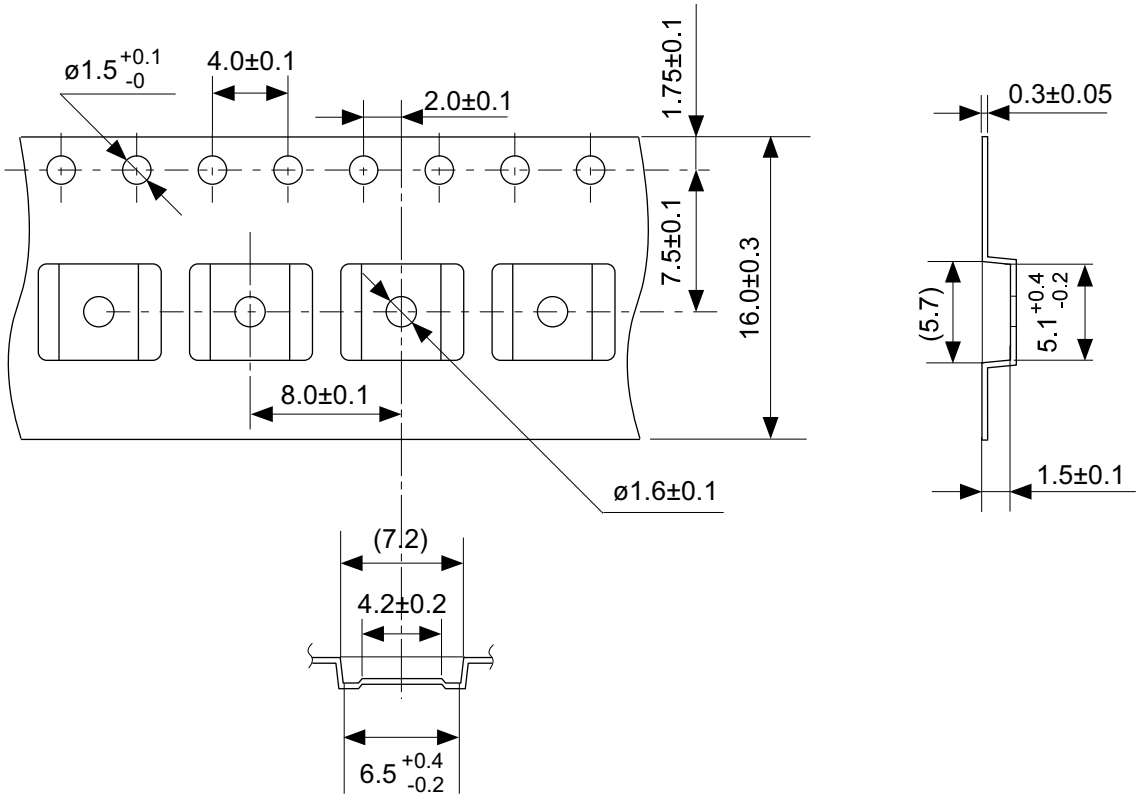

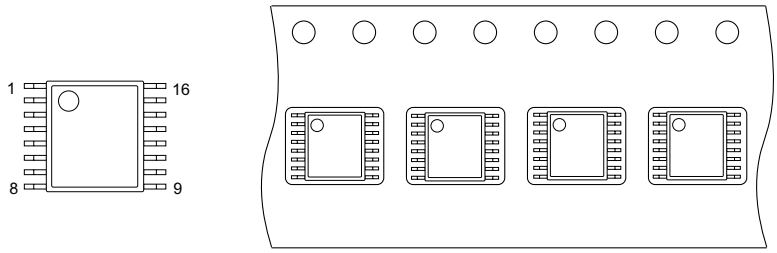

Feed direction

No. FT016-A-C-SD-1.1

TITLE	TSSOP16-A-Carrier Tape
No.	FT016-A-C-SD-1.1
ANGLE	
UNIT	mm

ABLIC Inc.

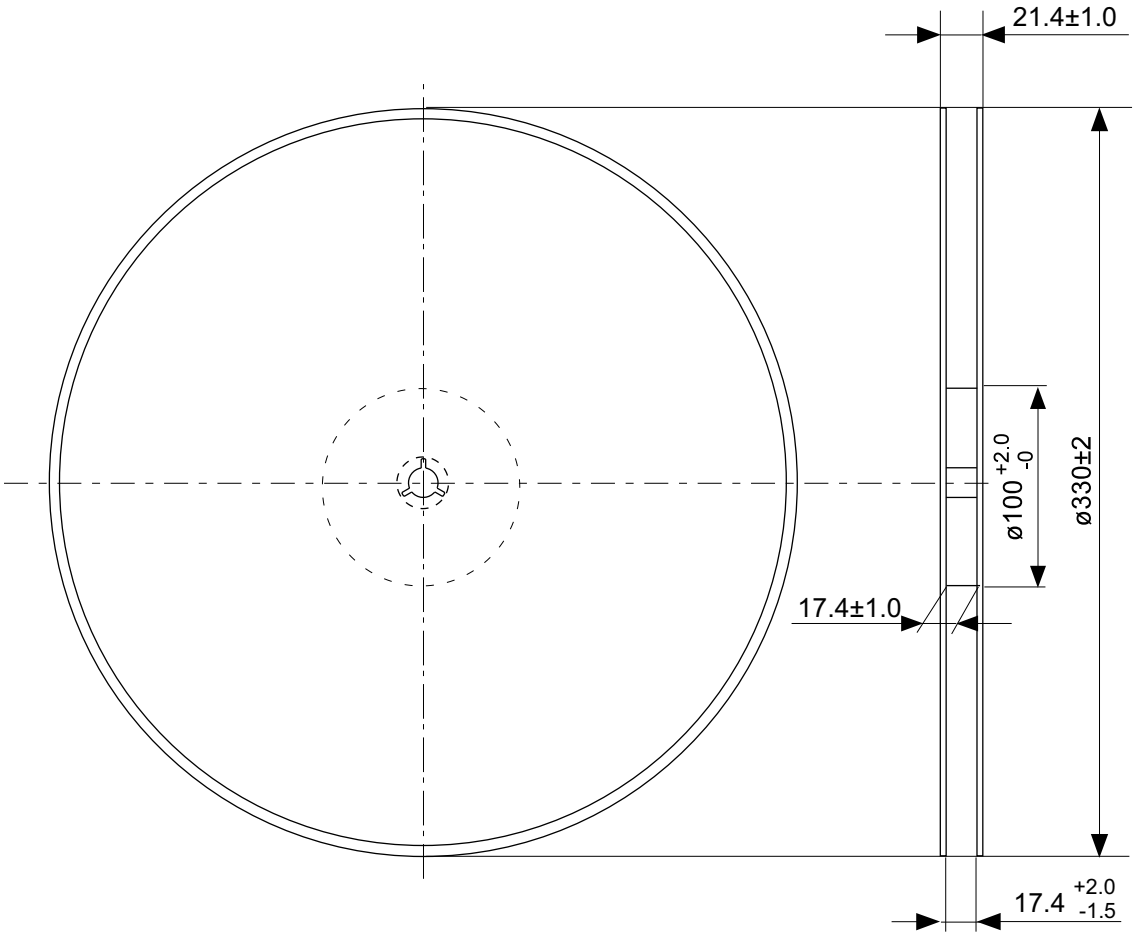

Enlarged drawing in the central part

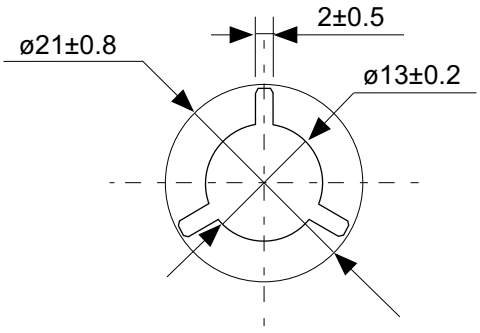

No. FT016-A-R-SD-2.0

TITLE	TSSOP16-A- Reel		
No.	FT016-A-R-SD-2.0		
ANGLE		QTY.	2,000
UNIT	mm		
	ABLIC Inc.		

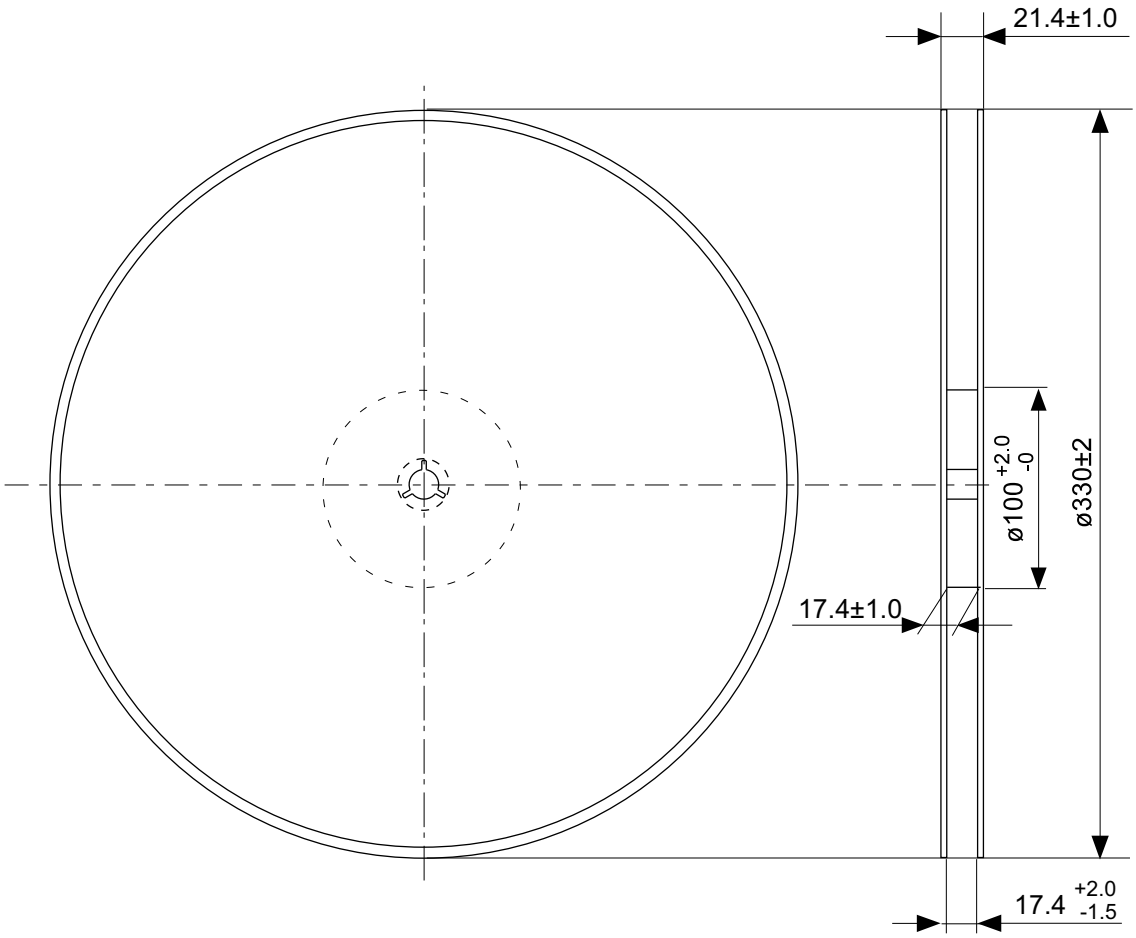

Enlarged drawing in the central part

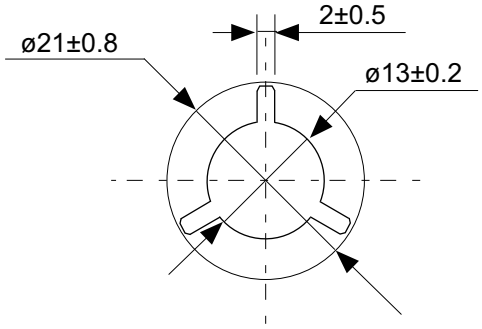

No. FT016-A-R-S1-1.0

TITLE	TSSOP16-A- Reel		
No.	FT016-A-R-S1-1.0		
ANGLE		QTY.	4,000
UNIT	mm		
	ABLIC Inc.		

Disclaimers (Handling Precautions)

1. All the information described herein (product data, specifications, figures, tables, programs, algorithms and application circuit examples, etc.) is current as of publishing date of this document and is subject to change without notice.
2. The circuit examples and the usages described herein are for reference only, and do not guarantee the success of any specific mass-production design.
   ABLIC Inc. is not liable for any losses, damages, claims or demands caused by the reasons other than the products described herein (hereinafter "the products") or infringement of third-party intellectual property right and any other right due to the use of the information described herein.
3. ABLIC Inc. is not liable for any losses, damages, claims or demands caused by the incorrect information described herein.
4. Be careful to use the products within their ranges described herein. Pay special attention for use to the absolute maximum ratings, operation voltage range and electrical characteristics, etc.
   ABLIC Inc. is not liable for any losses, damages, claims or demands caused by failures and / or accidents, etc. due to the use of the products outside their specified ranges.
5. Before using the products, confirm their applications, and the laws and regulations of the region or country where they are used and verify suitability, safety and other factors for the intended use.
6. When exporting the products, comply with the Foreign Exchange and Foreign Trade Act and all other export-related laws, and follow the required procedures.
7. The products are strictly prohibited from using, providing or exporting for the purposes of the development of weapons of mass destruction or military use. ABLIC Inc. is not liable for any losses, damages, claims or demands caused by any provision or export to the person or entity who intends to develop, manufacture, use or store nuclear, biological or chemical weapons or missiles, or use any other military purposes.
8. The products are not designed to be used as part of any device or equipment that may affect the human body, human life, or assets (such as medical equipment, disaster prevention systems, security systems, combustion control systems, infrastructure control systems, vehicle equipment, traffic systems, in-vehicle equipment, aviation equipment, aerospace equipment, and nuclear-related equipment), excluding when specified for in-vehicle use or other uses by ABLIC, Inc. Do not apply the products to the above listed devices and equipments.
   ABLIC Inc. is not liable for any losses, damages, claims or demands caused by unauthorized or unspecified use of the products.
9. In general, semiconductor products may fail or malfunction with some probability. The user of the products should therefore take responsibility to give thorough consideration to safety design including redundancy, fire spread prevention measures, and malfunction prevention to prevent accidents causing injury or death, fires and social damage, etc. that may ensue from the products' failure or malfunction.
   The entire system in which the products are used must be sufficiently evaluated and judged whether the products are allowed to apply for the system on customer's own responsibility.
10. The products are not designed to be radiation-proof. The necessary radiation measures should be taken in the product design by the customer depending on the intended use.
11. The products do not affect human health under normal use. However, they contain chemical substances and heavy metals and should therefore not be put in the mouth. The fracture surfaces of wafers and chips may be sharp. Be careful when handling these with the bare hands to prevent injuries, etc.
12. When disposing of the products, comply with the laws and ordinances of the country or region where they are used.
13. The information described herein contains copyright information and know-how of ABLIC Inc. The information described herein does not convey any license under any intellectual property rights or any other rights belonging to ABLIC Inc. or a third party. Reproduction or copying of the information from this document or any part of this document described herein for the purpose of disclosing it to a third-party is strictly prohibited without the express permission of ABLIC Inc.
14. For more details on the information described herein or any other questions, please contact ABLIC Inc.'s sales representative.
15. This Disclaimers have been delivered in a text using the Japanese language, which text, despite any translations into the English language and the Chinese language, shall be controlling.

2.4-2019.07

ENTEGRECİ

Bu belge www.entegreci.com üzerinden sunulmaktadır.

Elektronik komponent tedarikinde Entegreci

Entegreci, Eskişehir merkezli, Türkiye geneline satış yapan bir elektronik komponent mağazasıdır. Entegreler (IC), mikrodenetleyiciler, transistörler, diyotlar, pasif elemanlar, konnektörler, modüller ve geliştirme kartları tek adetten seri üretim adetlerine kadar satılır. Ürün sayfalarında güncel stok durumunu, fiyatı ve datasheet bağlantısını bulabilirsiniz.

Parça koduyla arama

Üretici parça numarasını yazın; stok ve fiyatı hemen görün.

www.entegreci.com

Ürün kategorileri

Entegreden kapasitöre tüm elektronik komponent kategorileri.

Kategorilere göz atın

Üreticiler

Aradığınız üreticinin ürünlerini tek sayfada inceleyin.

Üreticileri görün

Toplu alım ve teklif

Listede olmayan ya da yüksek adetli parçalar için teklif isteyin.

Teklif isteyin

www.entegreci.com | **destek@entegreci.com** | **0850 305 90 34**

Entegreci is an online electronic components store based in Türkiye. Search by manufacturer part number to see stock, prices and datasheets for integrated circuits, microcontrollers, transistors, passive components and connectors, or request a quote for parts that are not listed.

Bu sayfa Entegreci tarafından eklenmiştir. Belgenin önceki sayfaları asıl yayıncısına aittir ve içeriği değiştirilmemiştir; en güncel sürüm için belgenin yayıncısına başvurun.