V_{DSS} 40 V
I_D 79 A
$R_{DS(ON)}$ 4.2 mΩ

Features

Uses advanced SGT technology
Extremely low on-resistance RDS(on)
Excellent gate charge x RDS(on) product(FOM)

Application

Motor control and drive
Battery management
DC/DC

GK xxx
S004N04

LOGO GK xxx CODE

S004N04

RDS(ON) VDSS

PDFN5X6-8L top&bottom view

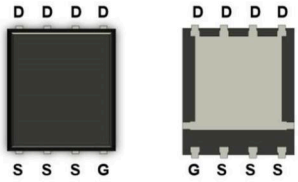

Equivalent Circuit

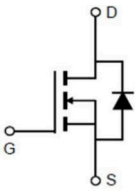

MAXIMUM RATINGS AND ELECTRICAL CHARACTERISTICS

Absolute Maximum Ratings (T_C=25℃ unless otherwise noted)

Parameter	Symbol	Value	Unit
Drain-source voltage	V_{DS}	40	V
Gate-Source Voltage	V_{GS}	±20	V
Continuous drain current T_c=25℃（Silicon limit） T_c=100℃（Silicon limit）	I_D	 79 50	A
Pulsed Drain Current	I_{DM}	300	A
Maximum Power Dissipation	P_d	45	W
Single pulse avalanche energy	E_{AS}	182	mJ
Operating Junction and Storage Temperature Range	T_J,T_{STG}	-55 To 150	℃

Thermal Characteristic

Thermal Resistance,Junction-to-Case	R_{thJC}	2.3	℃/W
Thermal Resistance,Junction-to-Ambient	R_{thJA}	50	

Electrical Characteristics (T_J=25℃unless otherwise noted)

Parameter	Symbol	Condition	min	typ	max	Unit
Static Characteristic						
Drain-source breakdown voltage	$V_{(BR)DSS}$	V_{GS}=0V, I_D=250uA	40	-	-	V
Gate threshold voltage	$V_{GS(th)}$	V_{DS}=VGS, I_D=250uA	1.2	1.7	2.5	
Zero gate voltage drain current	I_{DSS}	V_{DS}=40V,V_{GS}=0V	-	-	1.0	μA
Gate-source leakage current	I_{GSS}	V_{GS}=±20V,V_{DS}=0V	-	-	±100	nA
Drain-source on-state resistance	$R_{DS(on)}$	I_D=40A,V_{GS}=10V	-	4.2	5.2	mΩ
Dynamic Characteristic						
Input Capacitance	C_{iss}	V_{DS}=20V,V_{GS}=0V, f=1MHz	-	868	-	pF
Output Capacitance	C_{oss}		-	473	-	
Reverse Transfer Capacitance	C_{rss}		-	9	-	
Gate resistance	Rg	f=1MHz	-	5	-	Ω
Gate Total Charge	Q_G	V_{DS}=20V,I_D=20A, V_{GS}=10V	-	18	-	nC
Gate-Source charge	Q_{gs}		-	3	-	
Gate-Drain charge	Q_{gd}		-	4	-	
Turn-on delay time	$t_{d(on)}$	V_{GS}=10V, V_{DS}=20V, I_D=20A, R_{REN}=6Ω	-	5	-	ns
Rise time	t_r		-	9	-	
Turn-off delay time	$t_{d(off)}$		-	23	-	
Fall time	t_f		-	15	-	
Body Diode Characteristic						
Diode Forward Voltage	V_{SD}	VGS=0V,IS=65A	-	-	1.2	v
Reverse Recovery Time	t_{rr}	I_F =65A di/dt = 100A/μs	-	-	23	ns
Reverse Recovery Charge	Q_{rr}		-	-	62	nC

RATING AND CHARACTERISTIC CURVES

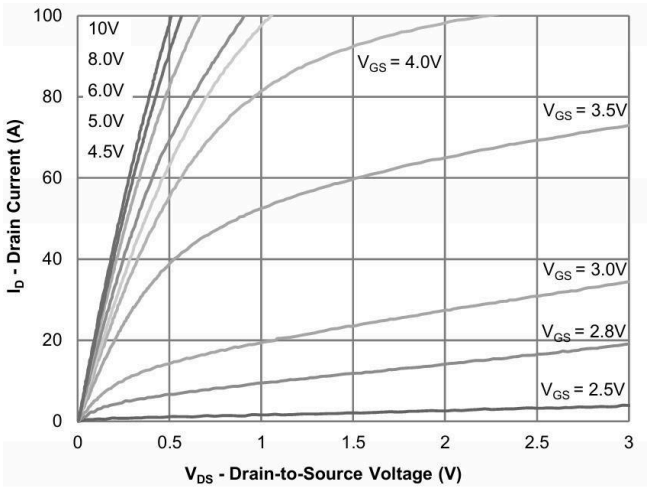

Figure 1: Output Characteristics

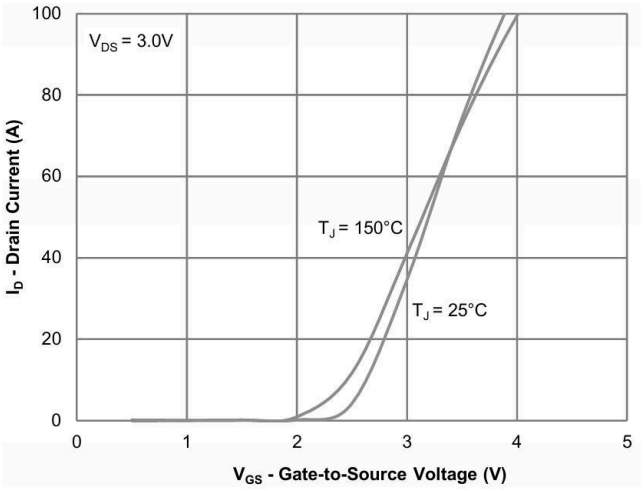

Figure 2: Transfer Characteristics

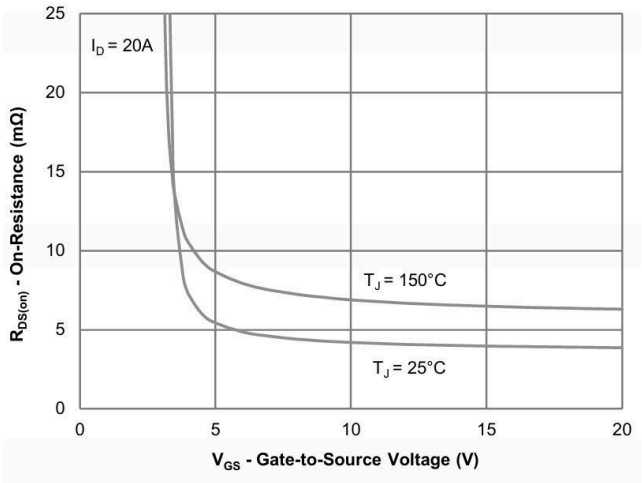

Figure 3: On-Resistance vs. Gate-Source Voltage

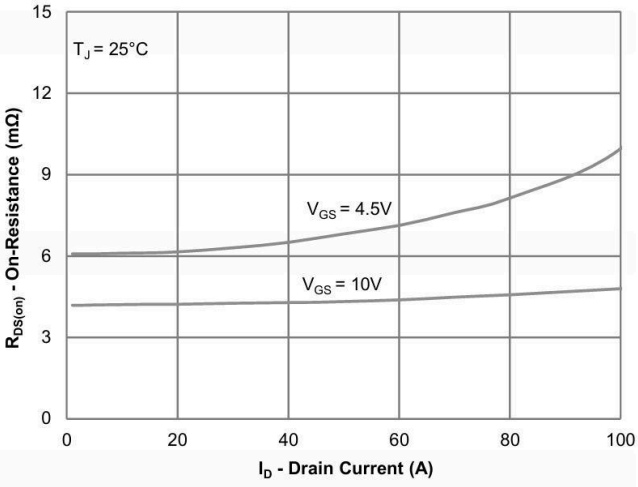

Figure 4: On-Resistance vs. Drain Current and Gate Voltage

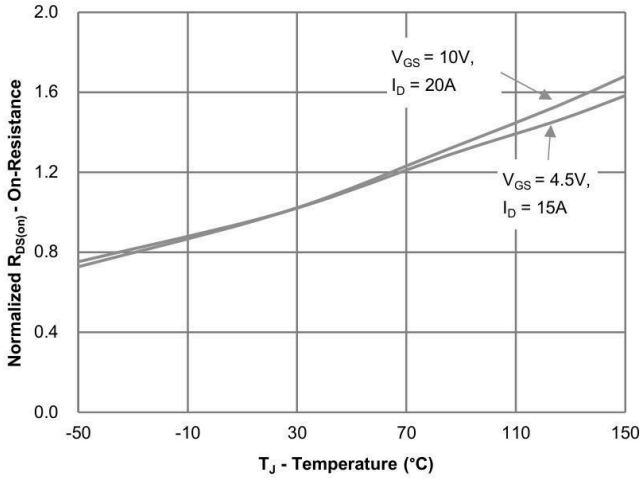

Figure 5: On-Resistance vs. Junction Temperature

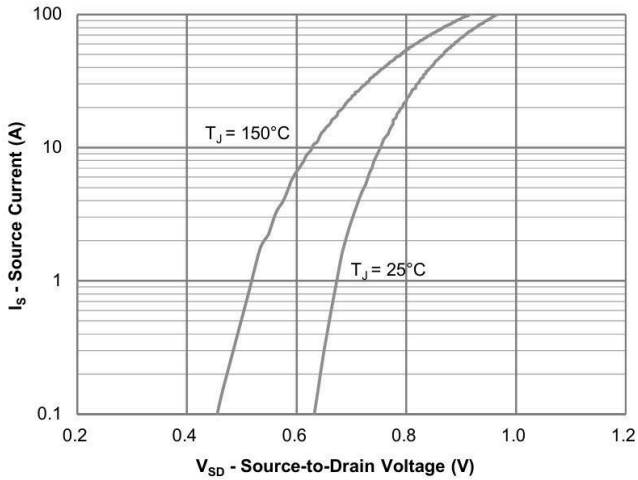

Figure 6: Source-Drain Diode Forward Voltage

RATING AND CHARACTERISTIC CURVES

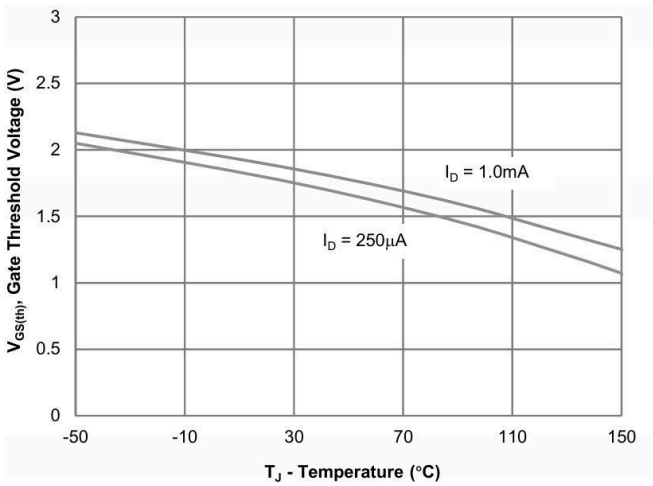

Figure 7: Gate Threshold Variation vs. Junction Temperature

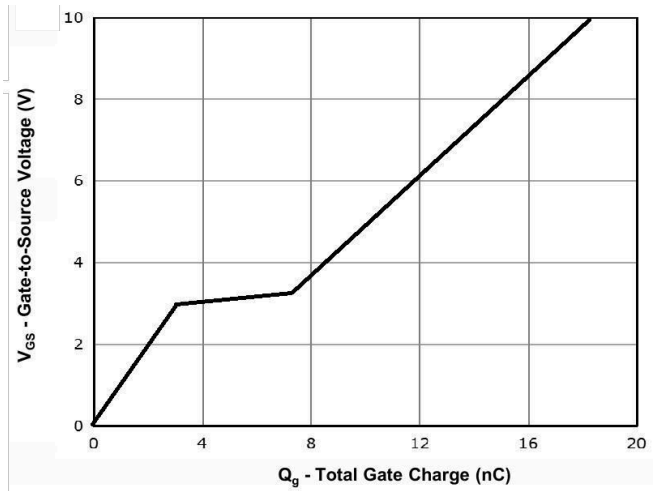

Figure 8: Gate Charge Characteristics

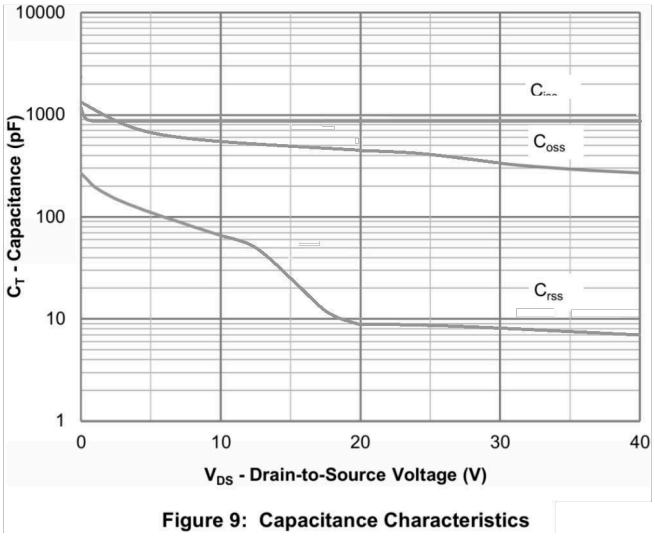

Figure 9: Capacitance Characteristics

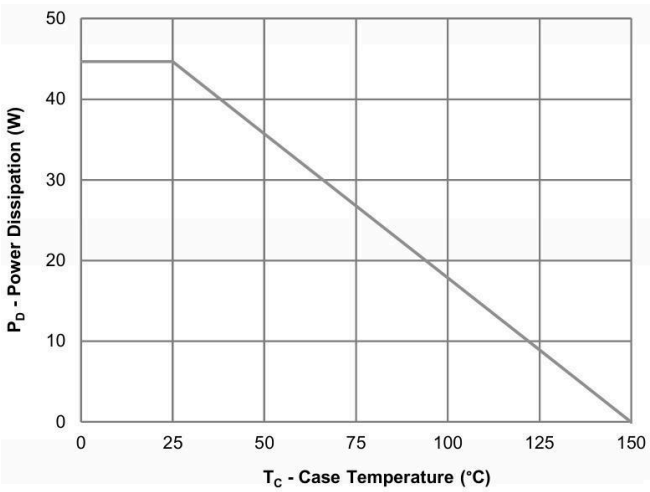

Figure 10: Power Derating

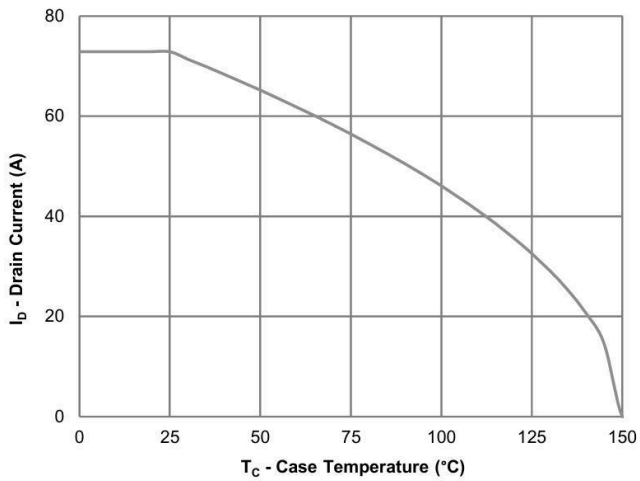

Figure 11: Current Derating

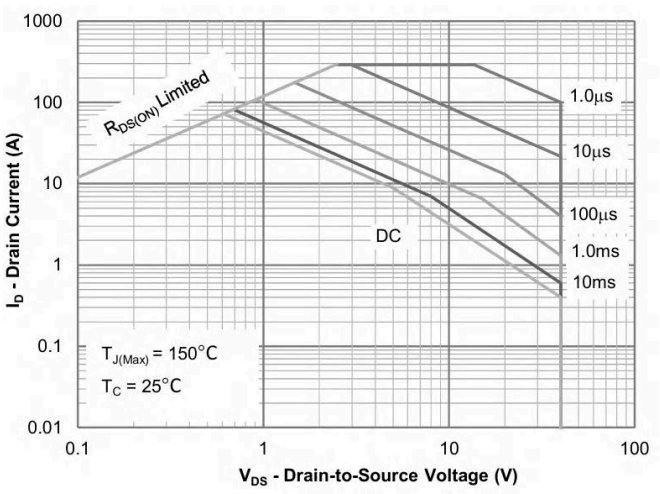

Figure 12: Safe Operating Area

RATING AND CHARACTERISTIC CURVES

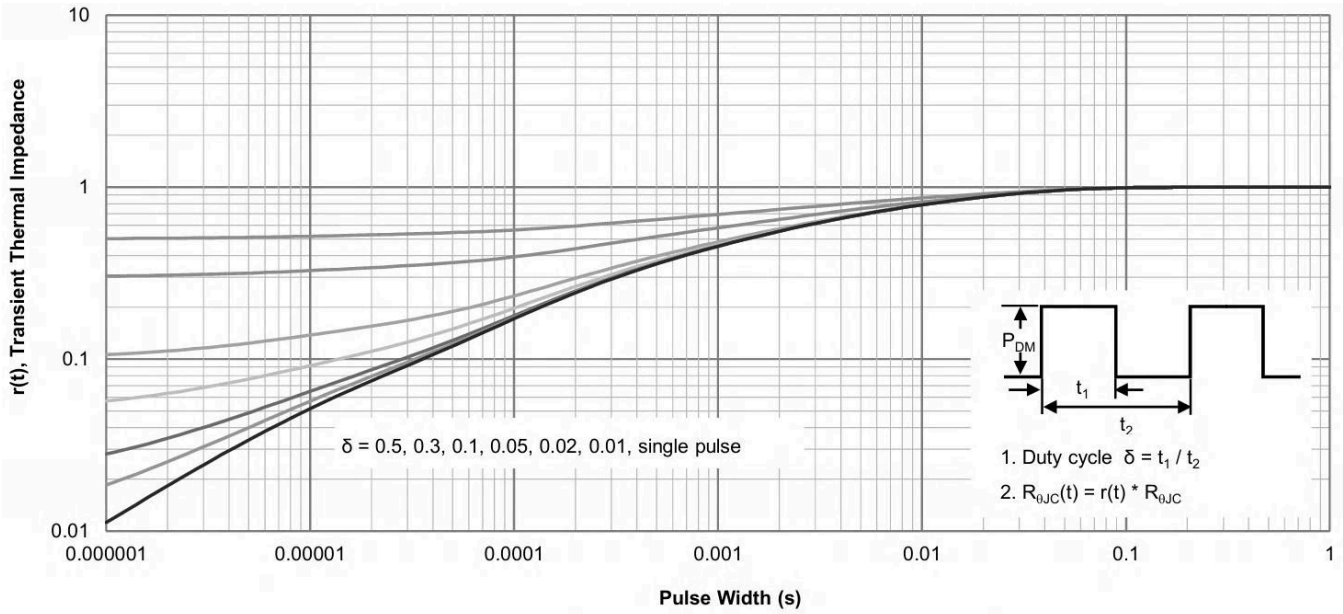

Figure 13: Normalized Maximum Transient Thermal Impedance

Test Circuit & Waveform

Gate Charge Test Circuit & Waveform

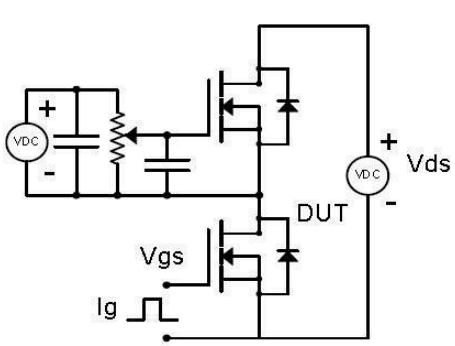

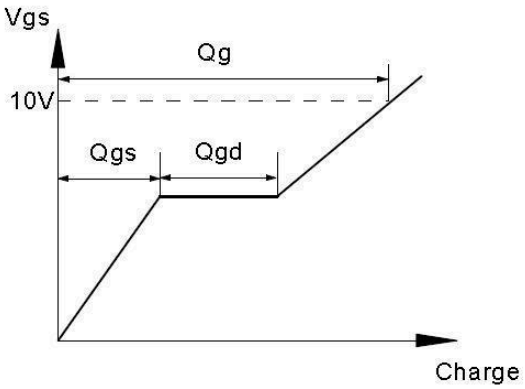

Resistive Switching Test Circuit & Waveforms

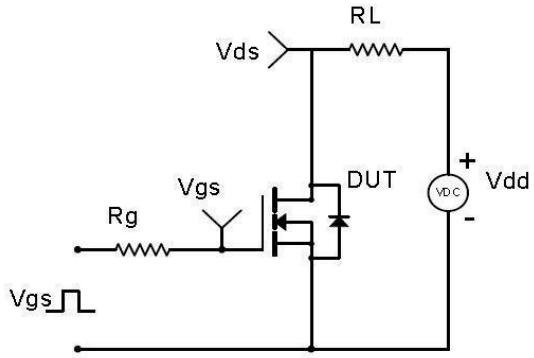

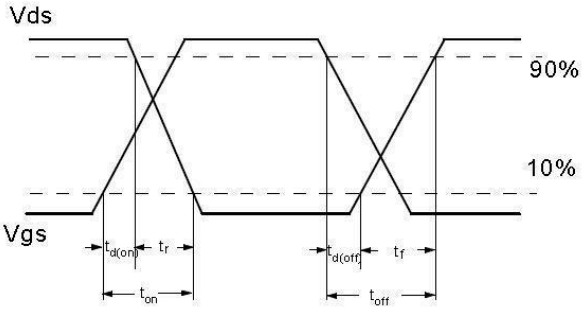

Unclamped Inductive Switching (UIS) Test Circuit & Waveforms

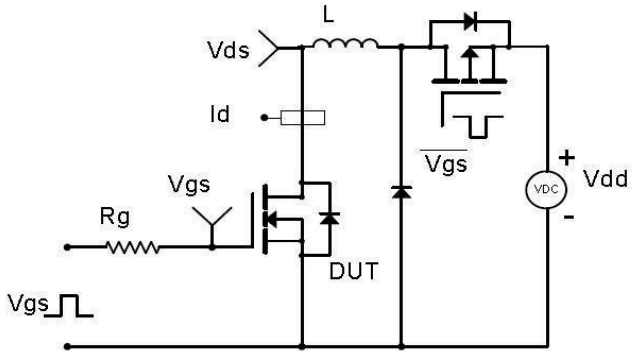

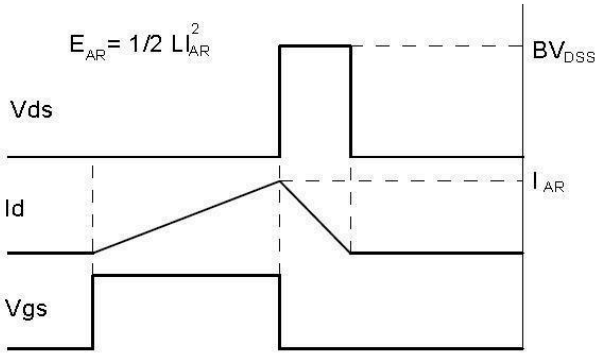

Diode Recovery Test Circuit & Waveforms

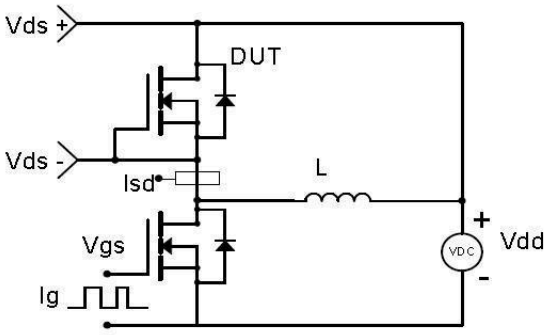

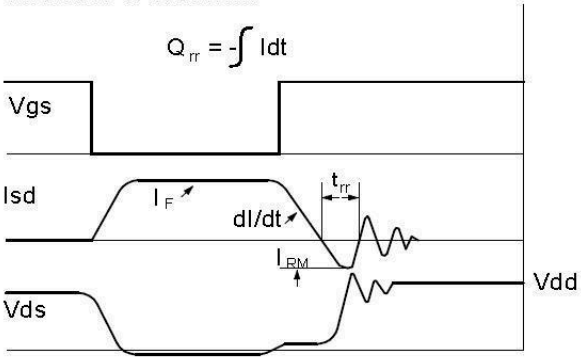

Soldering parameters

Reflow Condition		Pb-Free assembly (see as bellow)
Pre Heat	-Temperature Min ($T_{s(min)}$)	+150℃
	-Temperature Max($T_{s(max)}$)	+200℃
	-Time (Min to Max) (ts)	60-180 secs.
Average ramp up rate (Liquid us Temp (T_L) to peak)		3℃/sec. Max
$T_{s(max)}$ to T_L - Ramp-up Rate		3℃/sec. Max
Reflow	-Temperature(T_L)(Liquid us)	+217℃
	-Temperature(t_L)	60-150 secs.
Peak Temp (T_p)		+260(+0/-5)℃
Time within 5℃ of actual Peak Temp (t_p)		30 secs. Max
Ramp-down Rate		6℃/sec. Max
Time 25℃ to Peak Temp (T_P)		8 min. Max
Do not exceed		+260℃

FIG5: Reflow condition

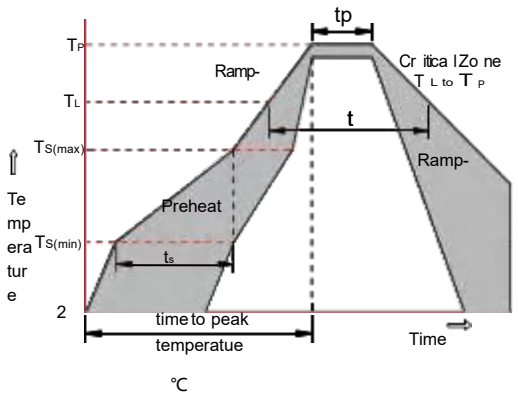

Package Dimensions & Suggested Pad Layout

PDFN5*6

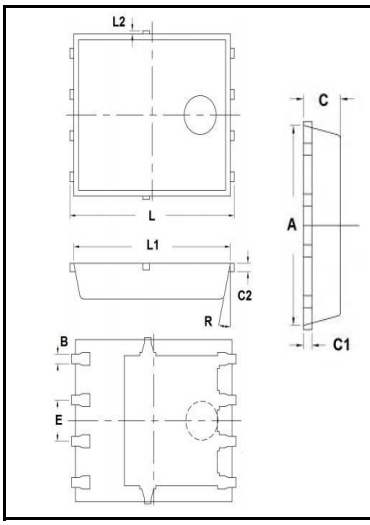

Dim.	Min.	Max.
A	4.8	5.2
B	0.25	0.35
C	1	1.2
C1	Typ0.254	
C2	Typ0.254	
E	Typ1.27	
L	6	6.3
L1	5.7	6
L2	Max0.2	
R	Typ13°	

All Dimensions in millimeter

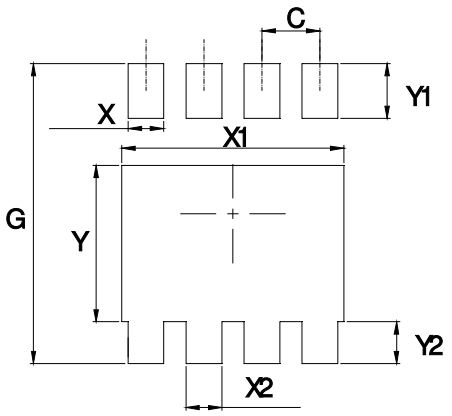

Dimensions	Value (in mm)
C	1.27
G	6.45
X	0.62
X1	4.50
X2	0.62
Y	3.70
Y1	1.05
Y2	0.80

Tape & rell specification

Tape

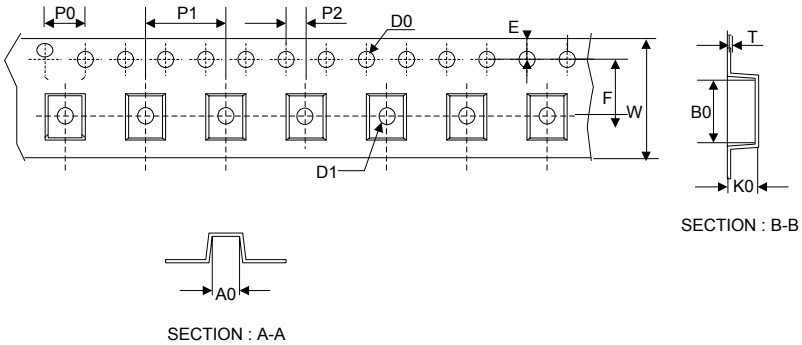

Symbol	Dimension (mm)
P0	4.00±0.20
P1	8.00±0.20
P2	2.00±0.20
D0	1.55±0.20
D1	1.55±0.20
E	1.75±0.20
F	5.50±0.20
W	12.00±0.20
A0	6.60±0.20
B0	5.70±0.20
K0	1.30±0.20
T	0.20±0.20

13” Reel

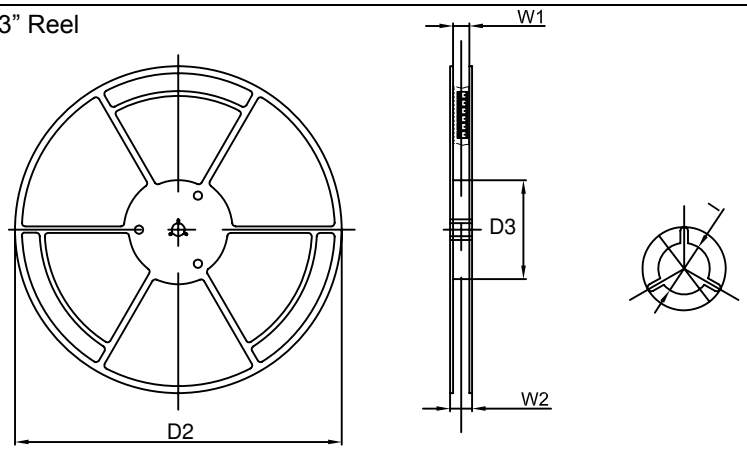

D2	330.0±5.0
D3	100.0±4.0
W1	12.0±5.0
W2	14.0±5.0
I	13.0±2.0

Quantity: 5000PCS

ENTEGRECİ

Bu belge www.entegreci.com üzerinden sunulmaktadır.

Elektronik komponent tedarikinde Entegreci

Entegreci, Eskişehir merkezli, Türkiye geneline satış yapan bir elektronik komponent mağazasıdır. Entegreler (IC), mikrodenetleyiciler, transistörler, diyotlar, pasif elemanlar, konnektörler, modüller ve geliştirme kartları tek adetten seri üretim adetlerine kadar satılır. Ürün sayfalarında güncel stok durumunu, fiyatı ve datasheet bağlantısını bulabilirsiniz.

Parça koduyla arama

Üretici parça numarasını yazın; stok ve fiyatı hemen görün.

www.entegreci.com

Ürün kategorileri

Entegreden kapasitöre tüm elektronik komponent kategorileri.

Kategorilere göz atın

Üreticiler

Aradığınız üreticinin ürünlerini tek sayfada inceleyin.

Üreticileri görün

Toplu alım ve teklif

Listede olmayan ya da yüksek adetli parçalar için teklif isteyin.

Teklif isteyin

www.entegreci.com | **destek@entegreci.com** | **0850 305 90 34**

Entegreci is an online electronic components store based in Türkiye. Search by manufacturer part number to see stock, prices and datasheets for integrated circuits, microcontrollers, transistors, passive components and connectors, or request a quote for parts that are not listed.

Bu sayfa Entegreci tarafından eklenmiştir. Belgenin önceki sayfaları asıl yayıncısına aittir ve içeriği değiştirilmemiştir; en güncel sürüm için belgenin yayıncısına başvurun.