PAC1951/2/3/4

Single/Multi-Channel Power Monitor with Accumulator, 32V Full-Scale Range

Features

- High-Side/Low-Side Current Monitor with One, Two, Three or Four Channels:
  - Simultaneous Sampling of V_{BUS} and V_{SENSE} with Two Independent 16-bit ADC
  - 100 mV Full-Scale Range (FSR) for Current Sense Voltage
  - Programmable FSR: -50 mV to +50 mV
  - 16-bit Resolution for Current Measurements
  - External Sense Resistor Sets the Full-Scale Current Range
  - Very Low Input Current Simplifies Routing
- Voltage Monitor with Wide V_{BUS} Range:
  - 0V to 32V FSR
  - 16V Programmable V_{BUS} Option
  - 16-bit RESOLUTION for Voltage Measurements
- V_{SOURCE} Can Be Applied Before V_{DD} Is Applied
- Real-Time Auto-Calibration of Offset Error for Voltage and Current
- 1% Power Measurement Accuracy over a Wide Dynamic Range
- On-Chip Accumulation of 30-bit Power Results for Energy Measurement:
  - User Programmable Sampling Rates of 8, 64, 256 and 1,024 sps
  - 5,120 sps for a Single Channel in Burst Mode
- 2.7V to 5.5V Supply Operation:
  - 1.62 to 5.5V capable I^2C/SMBus and digital I/O
  - SMBus 3.1 and I^2C Fast Mode Plus, 1 Mbps
  - High-Speed Mode (3.4 Mbps)
- SMBus Address – 16 Options, Set with Resistor
- ALERT on Conversion Complete
- ALERT on Over/Undervoltage and Current or Overpower Conditions
- Coulomb Counting: When Selected, Accumulator Gathers V_{SENSE} Values
- 8X Averaging Mode for Single-Shot Measurements to Reduce Noise and Offset
- Two Independent $\overline{ALERT}$/GPIO Pins
- AEC-Q100 Qualified (VQFN)
- Available Packages:
  - 3 x 3 x 0.9 mm 16-Lead VQFN with wettable flanks
  - 2.215 x 2.16 x 0.641 mm 16-Ball WLCSP
  - 2.215 x 2.16 x 0.319 mm 16-Ball WLCSP (PAC1954 only)

Applications

- Embedded Computing
- Networking
- FPGA Systems
- Low-Voltage/High-Power – AI, GPU
- Industrial
- Linux® Applications
- Notebook and Tablet Computing
- Cloud, Linux and Server Computing
- Optical Networking Modules
- Automotive

Computing Platform Support

- Windows® 10 Driver
- Arduino Library
- Python™ Script
- MCC Library

Description

The PAC1951/2/3/4 family of products are comprised of one, two, three and four-channel energy monitors with bus voltage monitors and current sense amplifiers that feed high-resolution ADCs. There are two versions of PAC195X: PAC195X-1 devices for high-side current sensing and PAC195X-2 devices for high-side or low-side current sensing or floating V_{BUS} applications.

Digital circuitry performs power calculations and energy accumulation. This enables energy monitoring with integration periods up to one year or longer. Bus voltage, sense resistor voltage and accumulated proportional power are stored in registers for retrieval by the system host or embedded controller. PAC1951/2/3/4 has a set of digital comparators that allow the user to detect over/undervoltage, over/undercurrent and overpower against user programmed limits for each channel and generate an ALERT when the threshold is exceeded.

The sampling rate and energy integration period can be controlled over SMBus or I^2C. Active channel selection, single-shot measurements and other controls are also configurable by the SMBus or I^2C. PAC1951/2/3/4 uses real-time calibration to minimize the offset error. No input filters are required for this device.

© 2021-2025 Microchip Technology Inc. and its subsidiaries

Package Types

PAC195X-1
3 x 3 mm VQFN[1]

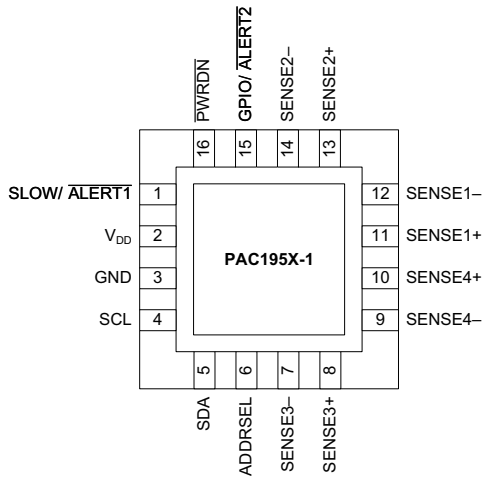

PAC195X-1
2.215 x 2.16 x 0.641 mm WLCSP
2.215 x 2.16 x 0.319 mm WLCSP (only PAC1954)[2]

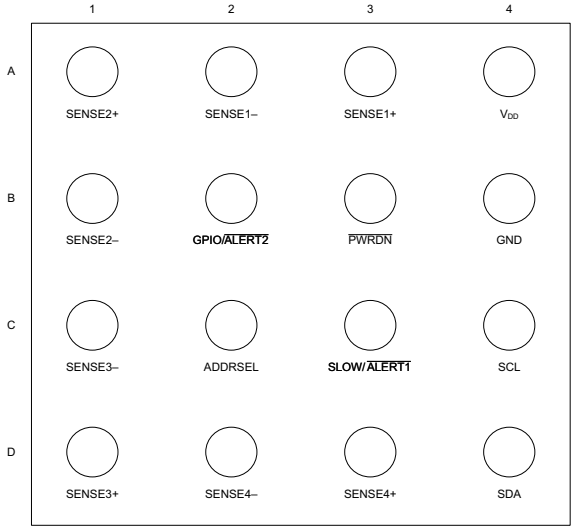

PAC195X-2
3 x 3 mm VQFN[1]

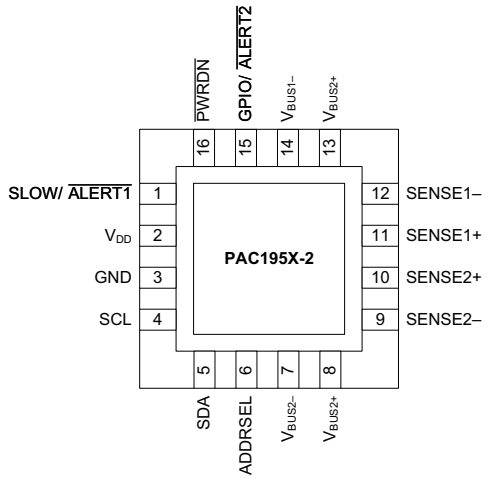

PAC195X-2
2.215 x 2.16 x 0.641 mm WLCSP

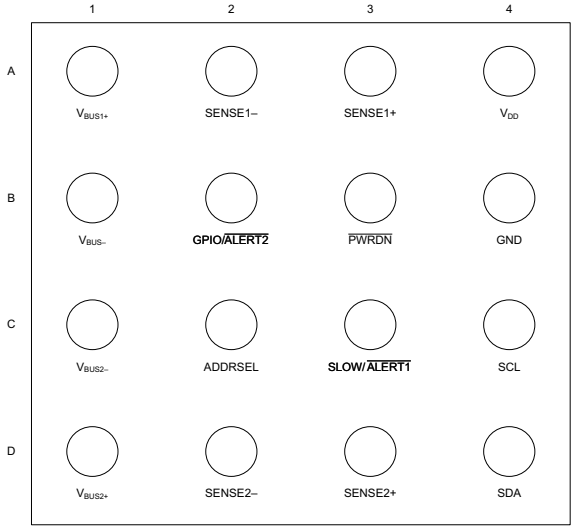

Note 1: Includes Exposed Thermal Pad; see Table 3-1 and Table 3-2.

2: Ball spacing of 0.5 mm for all devices. Ball spacing of 0.4 mm available only for PAC1954. For more details about the WLCSP packaging, see **Packaging Information**.

© 2021-2025 Microchip Technology Inc. and its subsidiaries

PAC195X-1 Functional Block Diagram

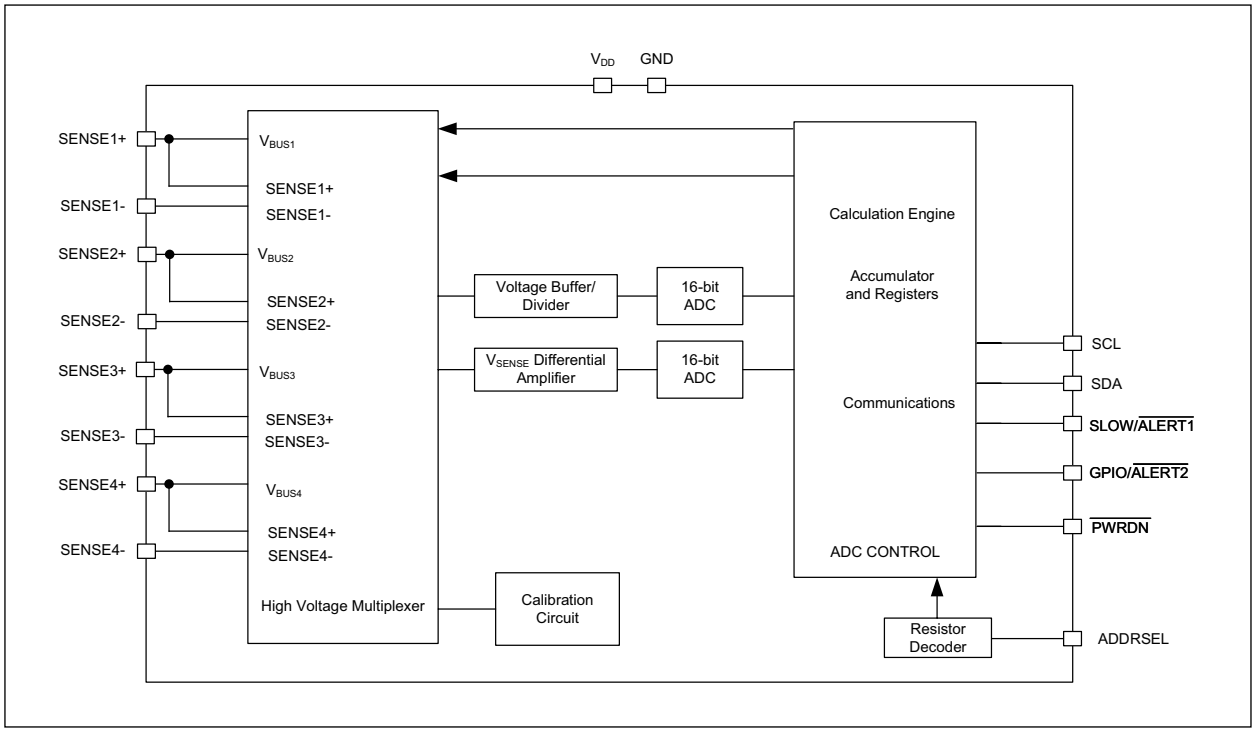

PAC195X-2 Functional Block Diagram

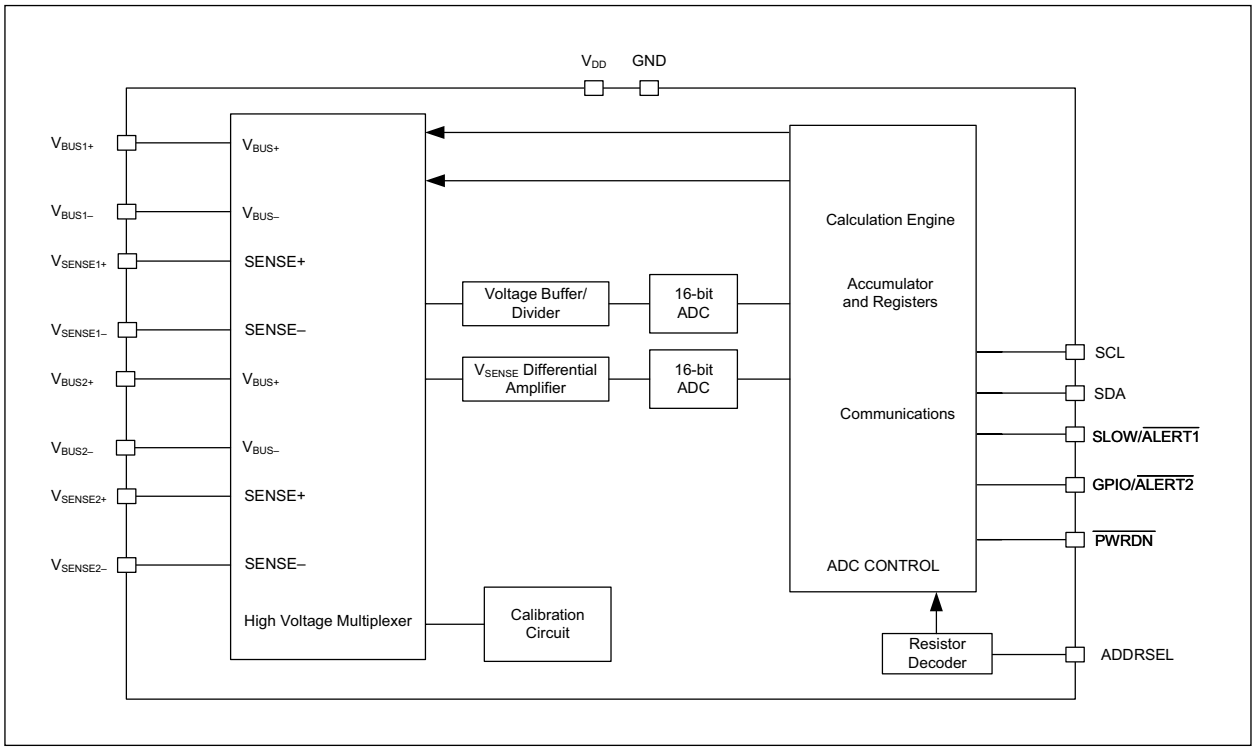

1.0 ELECTRICAL CHARACTERISTICS

1.1 Electrical Specifications

Absolute Maximum Ratings†

V_{DD} Pin..... -0.3 to 6.0V
Voltage on SENSE– and SENSE+ Pins..... -0.3 to 40V
Voltage on Any Other Pin to GND..... -0.3 to 6.0V
Voltage between Sense Pins (|(SENSE+ – SENSE–)|).....500 mV
Input Current to Any Pin Except V_{DD}.....±100 mA
Output Short-Circuit Current.....Continuous
Operating Ambient Temperature Range.....-40°C to +125°C
Storage Temperature Range.....-55°C to +150°C
ESD Rating – All Pins – HBM.....7500V
ESD Rating – All Pins – CDM.....2000V

† Stresses above those listed under “Absolute Maximum Ratings” may cause permanent damage to the device. This is a stress rating only and functional operation of the device at those or any other conditions above those indicated in the operation listings of this specification is not implied. Exposure above maximum rating conditions for extended periods may affect device reliability.

ESD Protection Diagram

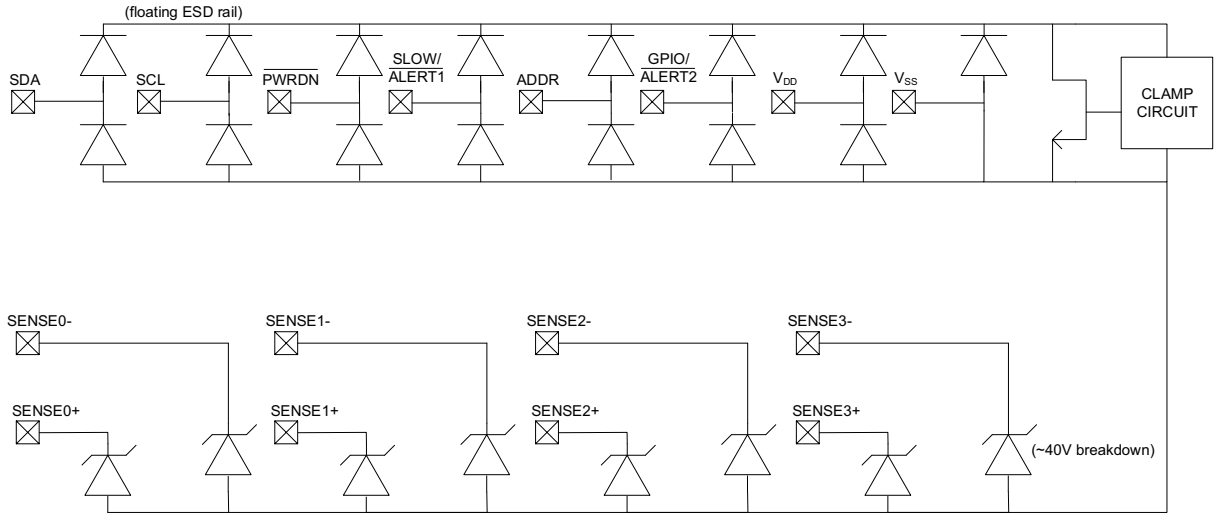

Note: The SENSE+ and SENSE– pins may be at 32V (40V absolute maximum) when V_{DD} is at zero.

© 2021-2025 Microchip Technology Inc. and its subsidiaries

DC ELECTRICAL CHARACTERISTICS

Electrical Characteristics: Unless otherwise specified, T_A = -40°C to +125°C, V_{DD} = 2.7V to 5.5V, V_{BUS} = 0V to 32V, V_{SENSE} = (V_{SENSE+} – $V_{SENSE–}$) = 0V. Typical values are at T_A = +25°C, V_{DD} = 3.3V.

Parameters	Symbol	Min.	Typical	Max.	Units	Conditions
Power Supply						
V_{DD} Range	V_{DD}	2.7	—	5.5	V	—
V_{DD} Active Current	I_{DD}	—	395	535	µA	1024 sps, 4 channels enabled
		—	12	130		8 sps, 4 channels enabled
V_{DD} Sleep Current	I_{DD_SLEEP}	—	5	—	µA	—
V_{DD} Power-Down Current	I_{DD_PWRDN}	0	—	8	µA	V_{DD} = 3.3V
Minimum V_{DD} Rise Rate	$V_{DD_RISE_MIN}$	—	0.05	—	V/ms	0V to 5V in 100 ms
Maximum V_{DD} Rise Rate	$V_{DD_RISE_MAX}$	—	1000	—	V/ms	0V to 5V in 5 µs
POR Level	V_{POR}	—	1.35	—	V	—
Analog Input Characteristics						
Bus Voltage Range	V_{BUS}	-0.2V	—	32	V	Common-mode voltage on SENSE pins, referenced to ground
V_{SENSE} Differential Input Voltage Range	V_{SENSE_DIF}	-100	—	100	mV	—
SENSE+, SENSE– Pin Input Current	I_{SENSE+}, $I_{SENSE–}$	-6	0.6	6	µA	V_{SENSE+} = $V_{SENSE–}$ = Full scale All states include leakage current and average value of the capacitively coupled switching current.
		-1	0.4	1		V_{SENSE+} = 6V, $V_{SENSE–}$ = 5.9V All states include leakage current and average value of the capacitively coupled switching current.
V_{BUS}, V_{SENSE} Input Trace Resistance (allowable trace resistance without measurement error)	R_{TRACE}	—	1	—	kΩ	—
Measurement Accuracy						
V_{SENSE} ADC Data Resolution	V_{SENSE_RES}	—	—	16	Bits	—
V_{SENSE} LSB Step Size	V_{SENSE_LSB}	—	1.50	—	µV	FSR = 100 mV
		—	3.05	—		FSR = ±100 mV
V_{BUS} LSB Step Size	V_{BUS_LSB}	—	488	—	µV	FSR = 32V, 16-bit resolution
		—	976	—		FSR = ±32V, 16V resolution
V_{BUS} ADC Data Resolution	V_{BUS_RES}	—	—	16	Bits	14 bits are used for power calculations, 16 bits are reported when the V_{BUS} measurement result is read
V_{SENSE} Gain Accuracy	$V_{SENSE_GAIN_ERR}$	—	±0.1 ±0.3	±0.5	%	At +25°C Typical, -40°C to +125°C

© 2021-2025 Microchip Technology Inc. and its subsidiaries

DC ELECTRICAL CHARACTERISTICS (CONTINUED)

Electrical Characteristics: Unless otherwise specified, T_A = -40°C to +125°C, V_{DD} = 2.7V to 5.5V, V_{BUS} = 0V to 32V, V_{SENSE} = (V_{SENSE+} – $V_{SENSE–}$) = 0V. Typical values are at T_A = +25°C, V_{DD} = 3.3V.

Parameters	Symbol	Min.	Typical	Max.	Units	Conditions
Measurement Accuracy (continued)						
V_{SENSE} Offset Accuracy, Referenced to Input	$V_{SENSE_OFFSET_ERR}$	—	±25	±100	µV	16-bit resolution
V_{BUS} Gain Accuracy	$V_{BUS_GAIN_ERR}$	—	±0.02 ±0.2	±0.25	%	At +25°C Typical, -40°C to +125°C
Power Accumulator Accuracy (1 Sigma Error Range with > 1000 Accumulations)						
Accumulator Error	ACC_Err	—	0.1	—	%	V_{SENSE} = 97 mV
		—	0.1	—		V_{SENSE} = 10 mV
		—	1	—		V_{SENSE} = 1 mV
		—	2	—		V_{SENSE} = 100 µV
		—	4	—		V_{SENSE} = 50 µV
Active Mode Timing						
Time to First Communications	t_{INT_T}	—	—	50	ms	Time after V_{DD} is applied before it is ready to begin communication and measurement.
Transition from Sleep State to Start of Conversion Cycle	$t_{SLEEP_TO_ACTIVE}$	—	—	5	ms	Time from Sleep state exit commanded by register write to the beginning of the conversion cycle.
Digital I/O Pins (SLOW/$\overline{\text{ALERT}}$, SM_CLK, SM_DATA Pins)						
Input High Voltage	V_{IH}	1.35	—	—	V	—
Input Low Voltage	V_{IL}	—	—	0.8	V	—
Output Low Voltage	V_{OL}	—	—	0.4	V	Sinking 8 mA for the $\overline{\text{ALERT}}$ pins and 20 mA for the CLK pin in all modes. 4 mA for the SDA pin in 3.4 MHz mode.
Leakage Current	I_{LEAK}	-0.5	—	+0.5	µA	Powered or unpowered
Digital I/O Pin ($\overline{\text{PWRDN}}$)						
Input High Voltage	V_{IH}	1.3	—	—	V	—
Input Low Voltage	V_{IL}	—	—	0.6	V	—

© 2021-2025 Microchip Technology Inc. and its subsidiaries

AC ELECTRICAL CHARACTERISTICS – I²C/SMBUS TIMING

Electrical Characteristics: Unless otherwise specified, maximum values are at T_A = -40°C to +125°C, V_{DD} = 2.7V to 5.5V, $V_{I/O}$ = 1.62V to 5.5V, V_{BUS} = 0V to 32V; Typical values are at T_A = +25°C, V_{DD} = 3.3V, $V_{I/O}$ = 3.3V, V_{BUS} = 32V, V_{SENSE} = (V_{SENSE+} – $V_{SENSE–}$) = 0V.

Parameters	Symbol	Min.	Typical	Max.	Units	Conditions
Clock Frequency	f_{SMB}	0.01	—	1	MHz	Fast Mode Plus. No minimum if Time-out is not enabled.
		0.01	—	3.4		High-Speed mode. No minimum if Time-out is not enabled.
Spike Suppression	t_{SP}	0	—	50	ns	Fast Mode Plus
		0	—	10		High-Speed mode
Bus Free Time Stop to Start	t_{BUF}	0.5	—	—	µs	Per SMBus 3.1
Hold Time after Repeated Start Condition	$t_{HD:STA}$	0.26	—	—	µs	Per SMBus 3.1, Fast Mode Plus
		0.16	—	—		Per SMBus 3.1, High-Speed mode
Repeated Start Condition Setup Time	$t_{SU:STA}$	0.26	—	—	µs	Per SMBus 3.1, Fast Mode Plus
		0.16	—	—		Per SMBus 3.1, High-Speed mode
Setup Time: Stop	$t_{SU:STO}$	0.26	—	—	µs	Per SMBus 3.1, Fast Mode Plus
		0.16	—	—		Per SMBus 3.1, High-Speed mode
Setup Time: Start	$t_{SU:STA}$	0.26	—	—	µs	Per SMBus 3.1, Fast Mode Plus
		0.16	—	—		Per SMBus 3.1, High-Speed mode
Data Hold Time	$t_{HD:DAT}$	0	—	—	ns	Per SMBus 3.1, Fast Mode Plus
		0	—	70		Per SMBus 3.1, High-Speed mode
Data Setup Time	$t_{SU:DAT}$	50	—	—	ns	Per SMBus 3.1, Fast Mode Plus
		10	—	—		Per SMBus 3.1, High-Speed mode
Clock Low Period	t_{LOW}	0.5	—	—	µs	Per SMBus 3.1, Fast Mode Plus
		0.16	—	—		Per SMBus 3.1, High-Speed mode
Clock High Period	t_{HIGH}	0.26	—	50	µs	Fast Mode Plus
		0.06	—	50		High-Speed mode
Clock/Data Fall Time	t_{FALL}	12	—	120	ns	Fast Mode Plus
Clock/Data Rise Time	t_{RISE}	—	—	120	ns	Fast Mode Plus
Clock Fall Time	t_{fCL}	10	—	40	ns	High-Speed mode
Clock Rise Time	t_{rCL}	10	—	40	ns	High-Speed mode
Data Fall Time	t_{fDA}	10	—	80	ns	High-Speed mode
Data Rise Time	t_{rDA}	10	—	80	ns	High-Speed mode
Capacitive Load	C_{LOAD}	—	—	550	pF	Per bus line, Fast Mode Plus
		—	—	100		Per bus line, High-Speed mode
SLOW Pin Pulse Width	SLOWpw	150	—	—	µs	Pulses narrower than 150 µs may not be detected

TEMPERATURE SPECIFICATIONS

Electrical Specifications: Unless otherwise specified, all parameters apply for T_A = -40°C to +125°C, V_{DD} = 2.7V to 5.5V, V_{BUS} = 0V to 32V, $V_{SENSE+} - V_{SENSE-}$ = 0

Parameters	Sym.	Min.	Typ.	Max.	Units	Conditions
Temperature Ranges						
Specified Temperature Range	T_A	-40	—	+125	°C	—
Operating Temperature Range	T_A	-40	—	+125	°C	—
Storage Temperature Range	T_{STG}	-55	—	+150	°C	—
Thermal Package Resistance						
Thermal Resistance, 16-Lead VQFN	θ_{JA}	—	56.4	—	°C/W	—
	θ_{JB}	—	23.7	—	°C/W	—
	θ_{JC}	—	37.8	—	°C/W	—
Thermal Resistance, 16-Ball WLCSP	θ_{JA}	—	51.16	—	°C/W	—
	θ_{JC}	—	4.85	—	°C/W	—

© 2021-2025 Microchip Technology Inc. and its subsidiaries

2.0 TYPICAL PERFORMANCE CURVES

Note: The graphs and tables provided following this note are a statistical summary based on a limited number of samples and are provided for informational purposes only. The performance characteristics listed herein are not tested or guaranteed. In some graphs or tables, the data presented may be outside the specified operating range (e.g., outside specified power supply range) and therefore outside the warranted range.

Note: Unless otherwise indicated, maximum values are at T_A = -40°C to +125°C, V_{DD} = 2.7V to 5.5V, V_{BUS} = 0V to 32V. Typical values are at T_A = +25°C, V_{SENSE} = (V_{SENSE+} – $V_{SENSE–}$) = 0V, V_{DD} = 3.3V, V_{BUS} = 3.3V.

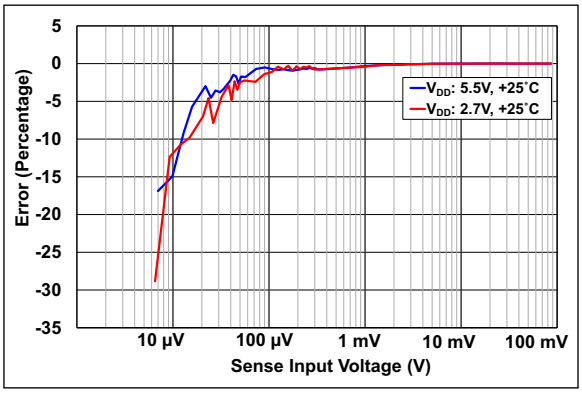

FIGURE 2-1: *V_{SENSE} Error vs. V_{SENSE} Input Voltage.*

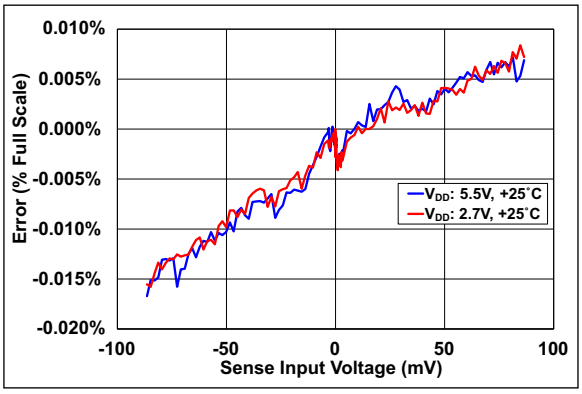

FIGURE 2-4: *V_{SENSE} Error vs. V_{SENSE} Input Voltage, Bidirectional Mode.*

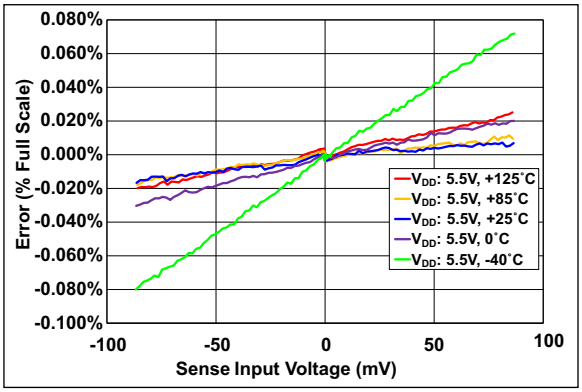

FIGURE 2-2: *V_{SENSE} Error vs. V_{SENSE} Input Voltage, Bidirectional Mode.*

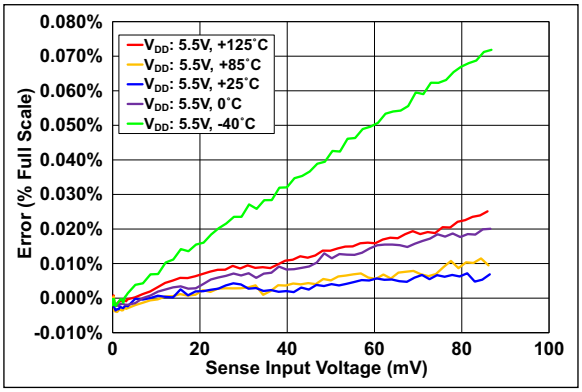

FIGURE 2-5: *V_{SENSE} Error vs. V_{SENSE} Input Voltage at Multiple Temperatures.*

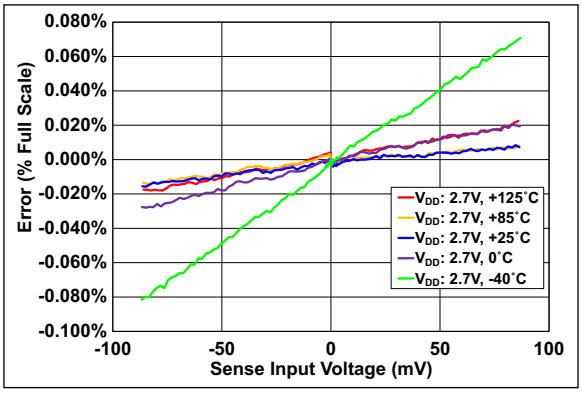

FIGURE 2-3: *V_{SENSE} Error vs. V_{SENSE} Input Voltage, Bidirectional Mode.*

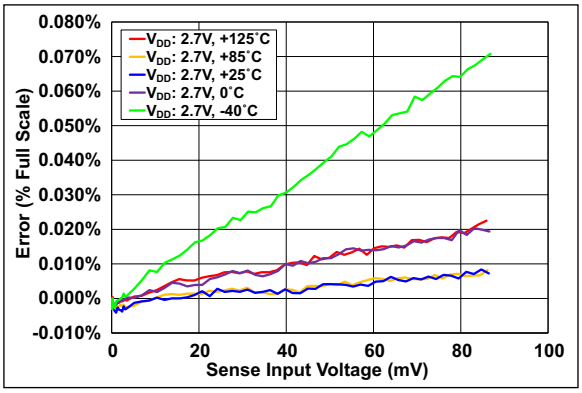

FIGURE 2-6: *V_{SENSE} Error vs. V_{SENSE} Input Voltage at Multiple Temperatures.*

© 2021-2025 Microchip Technology Inc. and its subsidiaries

Note: Unless otherwise indicated, maximum values are at T_A = -40°C to +125°C, V_{DD} = 2.7V to 5.5V, V_{BUS} = 0V to 32V. Typical values are at T_A = +25°C, V_{SENSE} = (V_{SENSE+} – $V_{SENSE–}$) = 0V, V_{DD} = 3.3V, V_{BUS} = 3.3V.

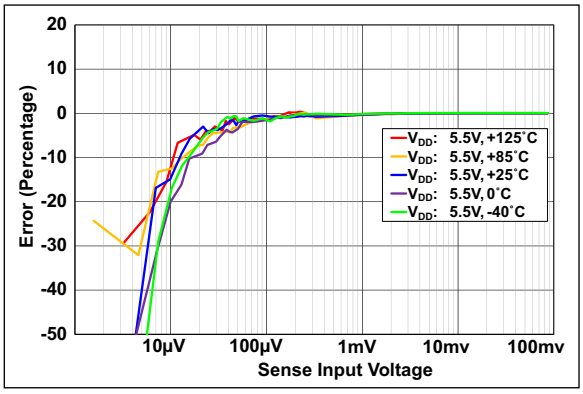

FIGURE 2-7: *V_{SENSE} Error vs. V_{SENSE} Input Voltage at Multiple Temperatures.*

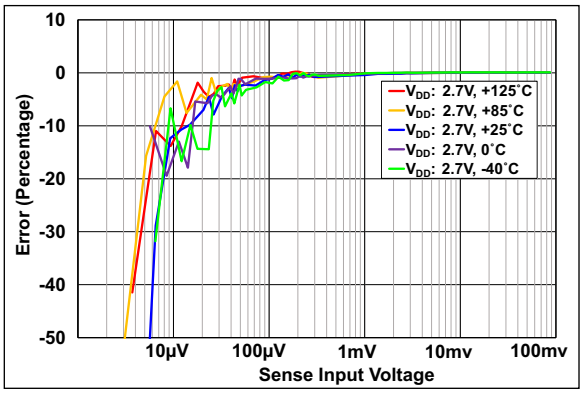

FIGURE 2-8: *V_{SENSE} Error vs. V_{SENSE} Input Voltage at Multiple Temperatures.*

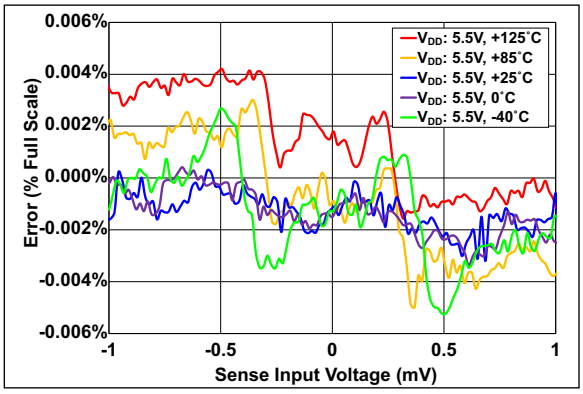

FIGURE 2-9: *V_{SENSE} Error vs. V_{SENSE} Input Voltage, Bidirectional Mode (Zoom View).*

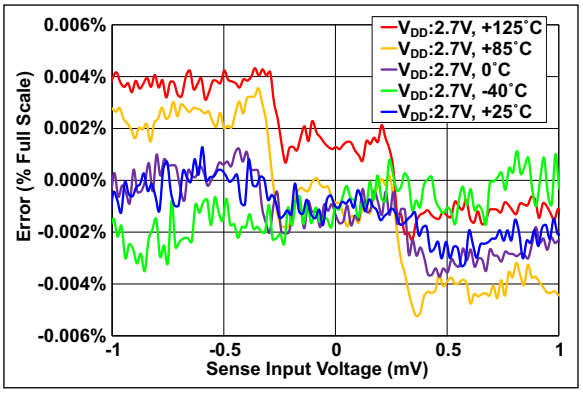

FIGURE 2-10: *V_{SENSE} Error vs. V_{SENSE} Input Voltage, Bidirectional Mode (Zoom View).*

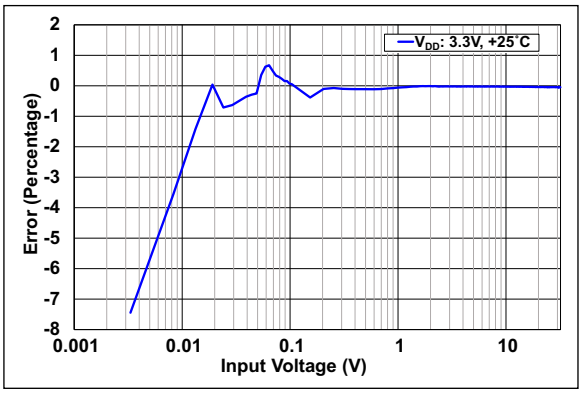

FIGURE 2-11: *V_{BUS} Error vs. V_{BUS} Input Voltage.*

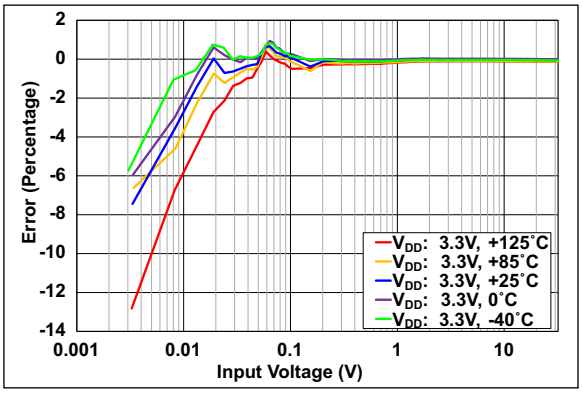

FIGURE 2-12: *V_{BUS} Error vs. V_{BUS} Input Voltage at Multiple Temperatures.*

© 2021-2025 Microchip Technology Inc. and its subsidiaries

Note: Unless otherwise indicated, maximum values are at T_A = -40°C to +125°C, V_{DD} = 2.7V to 5.5V, V_{BUS} = 0V to 32V. Typical values are at T_A = +25°C, V_{SENSE} = (V_{SENSE+} – $V_{SENSE–}$) = 0V, V_{DD} = 3.3V, V_{BUS} = 3.3V.

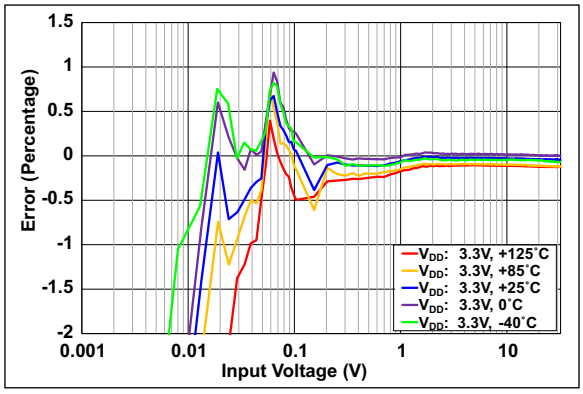

FIGURE 2-13: *V_{BUS} Error vs. V_{BUS} Input Voltage at Multiple Temperatures (Zoom View).*

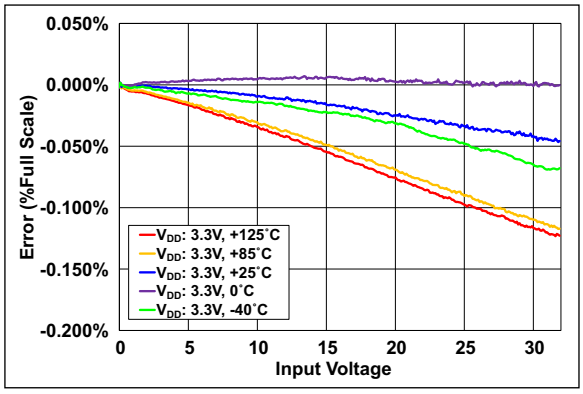

FIGURE 2-16: *V_{BUS} Error vs. V_{BUS} Input Voltage at Multiple Temperatures.*

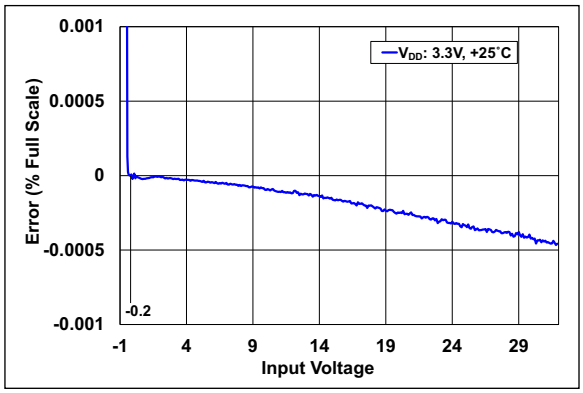

FIGURE 2-14: *V_{BUS} Error vs. V_{BUS} Input Voltage (Bipolar Mode).*

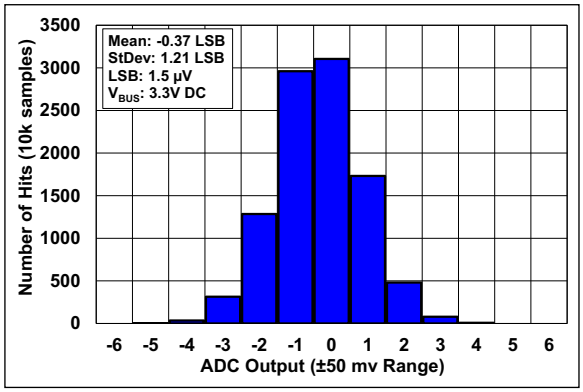

FIGURE 2-17: *Zero Input Histogram for V_{SENSE} (LSBs, 8X Average Results, Total Measurements 10,000).*

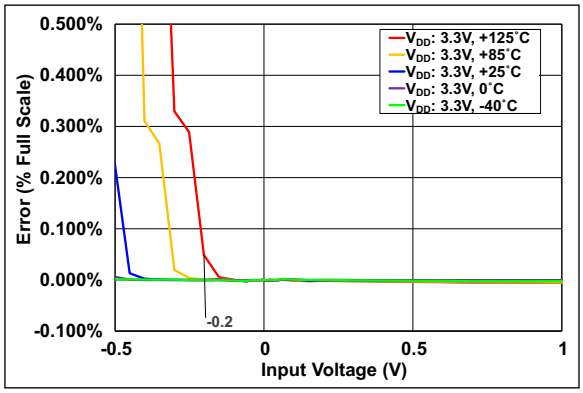

FIGURE 2-15: *V_{BUS} Error vs. V_{BUS} Input Voltage at Multiple Temperatures (Bipolar Mode).*

Note: Unless otherwise indicated, maximum values are at T_A = -40°C to +125°C, V_{DD} = 2.7V to 5.5V, V_{BUS} = 0V to 32V. Typical values are at T_A = +25°C, V_{SENSE} = (SENSE+ – SENSE–) = 0V, V_{DD} = 3.3V, V_{BUS} = 3.3V.

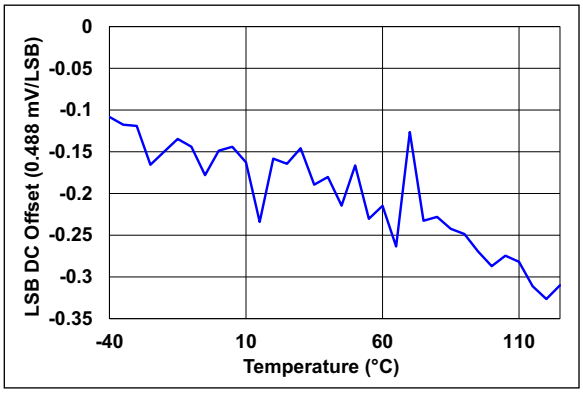

FIGURE 2-18: *Input Offset for V_{BUS} Measurements vs. Temperature.*

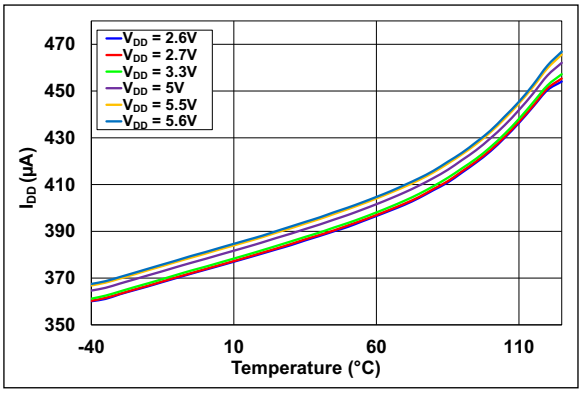

FIGURE 2-21: *I_{DD} vs. Temperature and Supply at 1,024 sps.*

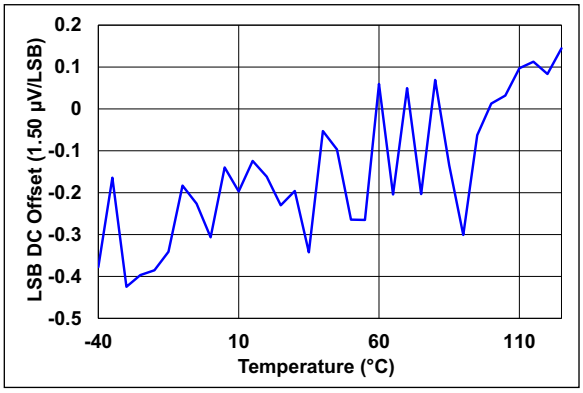

FIGURE 2-19: *Input Offset for V_{SENSE} Measurements vs. Temperature.*

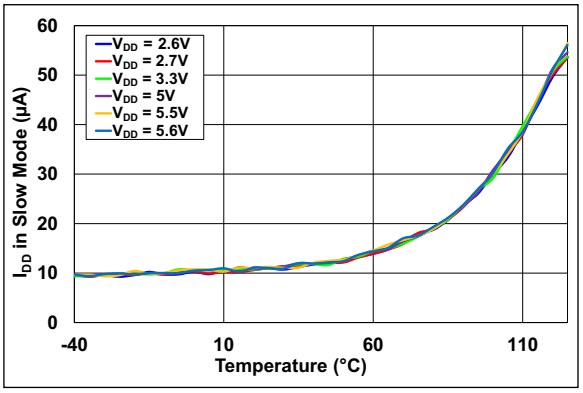

FIGURE 2-22: *I_{DD} in Slow Mode vs. Temperature and Supply.*

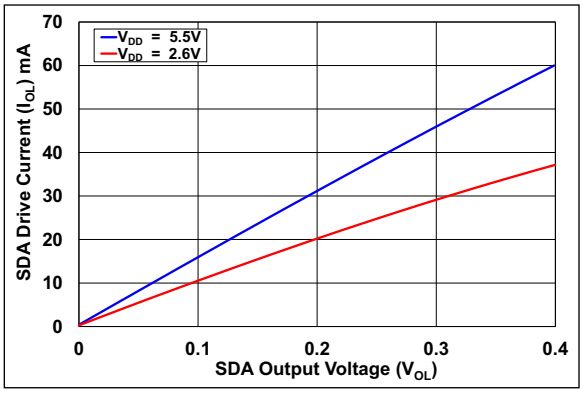

FIGURE 2-20: *SDA Drive Current vs. V_{OL} at +25°C.*

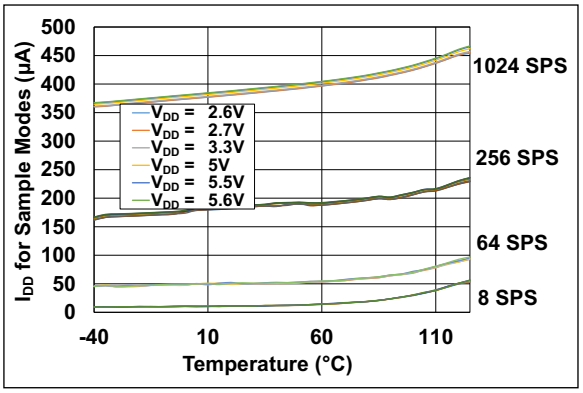

FIGURE 2-23: *I_{DD} vs. Temperature, Supply and Sample Rate.*

© 2021-2025 Microchip Technology Inc. and its subsidiaries

Note: Unless otherwise indicated, maximum values are at T_A = -40°C to +125°C, V_{DD} = 2.7V to 5.5V, V_{BUS} = 0V to 32V. Typical values are at T_A = +25°C, V_{SENSE} = (V_{SENSE+} – V_{SENSE-}) = 0V, V_{DD} = 3.3V, V_{BUS} = 3.3V.

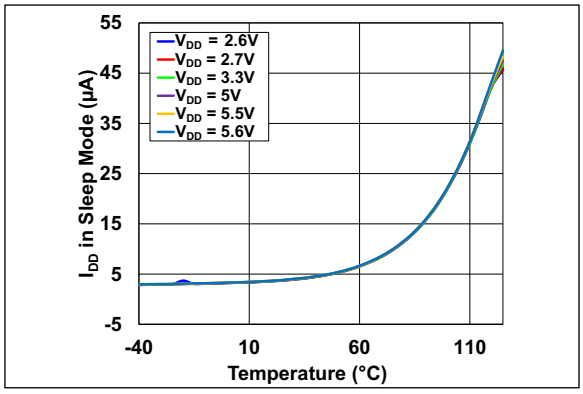

FIGURE 2-24: *Sleep Mode Current vs. Temperature and Supply.*

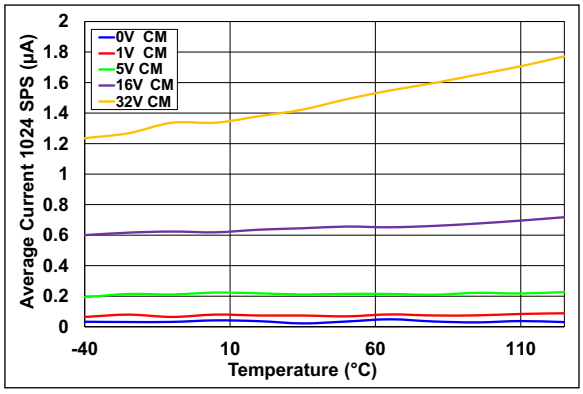

FIGURE 2-27: *Average V_{SENSE} Input Current – Active Mode, 1,024 sps vs. Temperature and Common-Mode.*

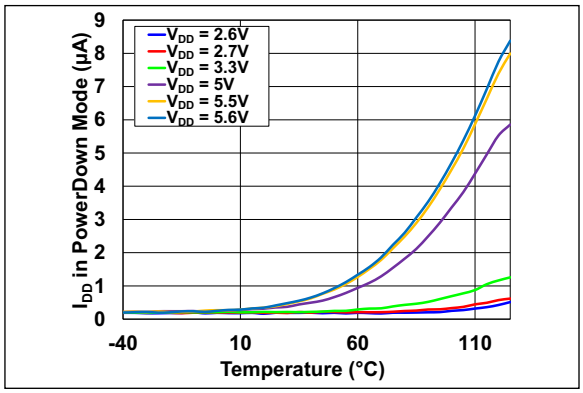

FIGURE 2-25: *Power-Down Mode Current vs. Temperature and Supply.*

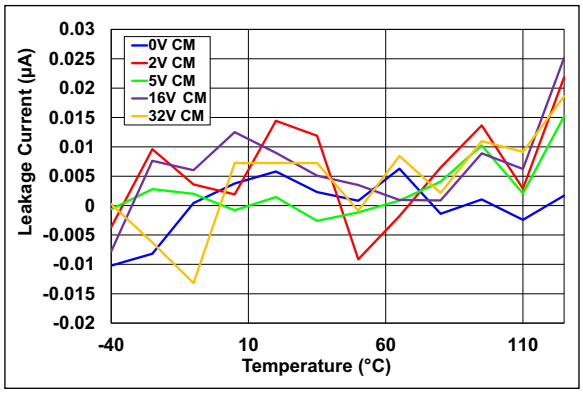

FIGURE 2-28: *V_{BUS} Input Leakage Current vs. Temperature and Common-Mode.*

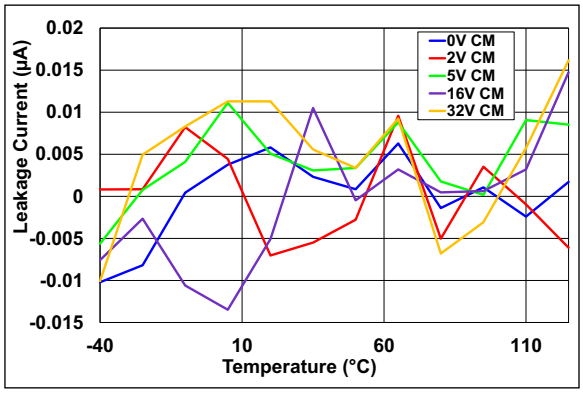

FIGURE 2-26: *V_{SENSE} Input Leakage Current vs. Temperature and Common-Mode.*

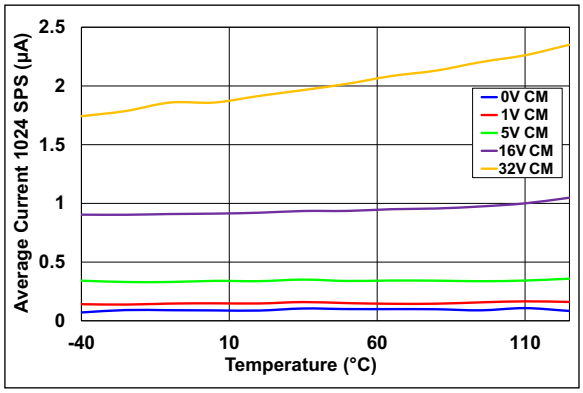

FIGURE 2-29: *V_{BUS} Input Current – Active Mode, 1,024 sps vs. Temperature and Common-Mode.*

Note: Unless otherwise indicated, maximum values are at T_A = -40°C to +125°C, V_{DD} = 2.7V to 5.5V, V_{BUS} = 0V to 32V. Typical values are at T_A = +25°C, V_{SENSE} = (V_{SENSE+} – $V_{SENSE–}$) = 0V, V_{DD} = 3.3V, V_{BUS} = 3.3V.

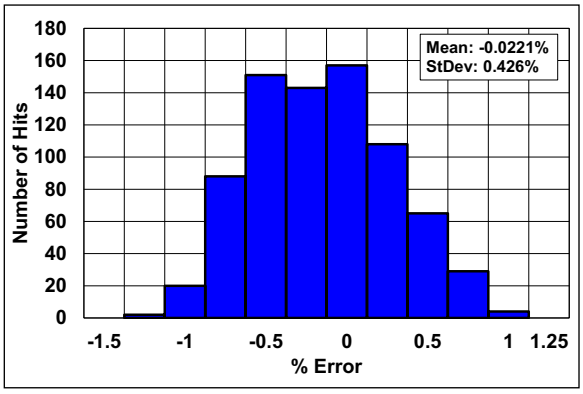

FIGURE 2-30: *Clock Frequency Error -40°C to +125°C. Total Population 768 Devices.*

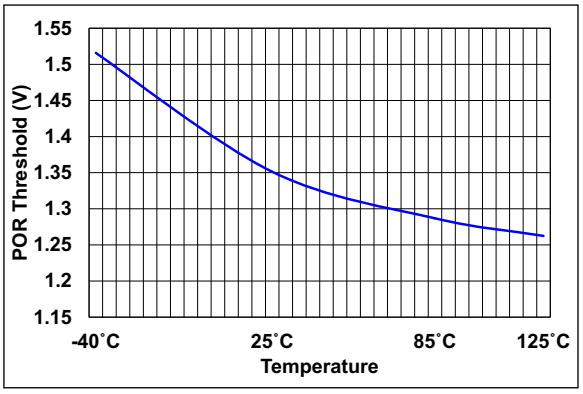

FIGURE 2-32: *POR vs. Temperature.*

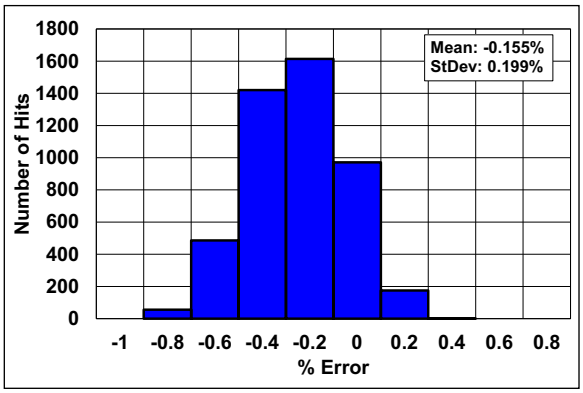

FIGURE 2-31: *Clock Frequency Error at +30°C. Total Population 4,723 Devices.*

© 2021-2025 Microchip Technology Inc. and its subsidiaries

3.0 PIN DESCRIPTIONS

The descriptions of the pins are listed in the two tables below.

TABLE 3-1: PAC195X-1 PIN FUNCTION TABLE

VQFN	WLCSP	Symbol	Pin Type	Description
1	C3	SLOW/$\overline{\text{ALERT1}}$	Digital I/O Pin	Default: SLOW Input pin. When high, all channels sample at 8 sps. The pin may be programmed to function as the $\overline{\text{ALERT1}}$ pin or GPIO (open-drain).
2	A4	V_{DD}	Power for IC	Positive power supply voltage.
3	B4	GND	Ground Pin	Ground for the IC.
4	C4	SCL	SMBus Clock Input	Clock Input pin.
5	D4	SDA	SMBus Data I/O	Open-drain requires a pull-up resistor to Host V_{DD}.
6	C2	ADDRSEL	Analog I/O Pin	Address selection for the SMBus client address.
7	C1(2)	SENSE3–(1)	Analog Input Pin	0-FSR, connect to the load side of the sense resistor.
8	D1(2)	SENSE3+(1)	Analog Input Pin	0-FSR, connect to the supply side of the sense resistor.
9	D2(2)	SENSE4–(1)	Analog Input Pin	0-FSR, connect to the load side of the sense resistor.
10	D3(2)	SENSE4+(1)	Analog Input Pin	0-FSR, connect to the supply side of the sense resistor.
11	A3	SENSE1+	Analog Input Pin	0-FSR, connect to the supply side of the sense resistor.
12	A2	SENSE1–	Analog Input Pin	0-FSR, connect to the load side of the sense resistor.
13	A1(2)	SENSE2+(1)	Analog Input Pin	0-FSR, connect to the supply side of the sense resistor.
14	B1(2)	SENSE2–(1)	Analog Input Pin	0-FSR, connect to the load side of the sense resistor.
15	B2	GPIO/$\overline{\text{ALERT2}}$	Digital I/O Pin	Default: GPIO, Input mode. May be programmed to be the $\overline{\text{ALERT2}}$ pin indicator (open-drain) or GPIO (open-drain).
16	B3	$\overline{\text{PWRDN}}$	Digital Input Pin	Active-low puts the device in a Power-Down state (all circuitry is powered down, including SMBus).
17	—	EP	N/C	The Exposed Pad is not electrically connected.

Note 1: VQFN Package: for PAC1951-1, pins 7, 8, 9, 10, 13 and 14 are not connected inside and must be grounded. For PAC1952-1, pins 7, 8, 9 and 10 are not connected inside and must be grounded. For PAC1953-1, pins 9 and 10 are not connected inside and must be grounded.

2: WLCSP Package: for PAC1951-1, pins A1, B1, C1, D1, D2 and D3 are inactive and must be grounded. For PAC1952-1, pins C1,D1, D2, D3 are inactive and must be grounded. For PAC1953-1, pins D2 and D3 are inactive and must be grounded.

3: Analog Input pins: for any unused channels, connect the SENSE+ and SENSE– pins to ground. Voltage may be applied to the analog input pins before or after V_{DD} is applied to the device.

4: For the analog input pins, the safe operating voltage range is up to 32V.

© 2021-2025 Microchip Technology Inc. and its subsidiaries

TABLE 3-2: PAC195X-2 PIN FUNCTION TABLE

VQFN	WLCSP	Symbol	Pin Type	Description
1	C3	SLOW/$\overline{\text{ALERT1}}$	Digital I/O Pin	Default: SLOW input pin. When high, all channels sample at 8 sps. The pin may be programmed to function as the $\overline{\text{ALERT1}}$ pin or GPIO (open-drain).
2	A4	V_{DD}	Power for IC	Positive power supply voltage.
3	B4	GND	Ground Pin	Ground for the IC.
4	C4	SCL	SMBus Clock Input	Clock Input pin requires a pull-up resistor V_{DD} voltage for the digital controller.
5	D4	SDA	SMBus Data I/O	Open-drain requires a pull-up resistor V_{DD} voltage for the digital controller.
6	C2	ADDRSEL	Analog I/O Pin	Address selection for the SMBus client address.
7	C1(2)	V_{BUS2-}(1)	Analog Input Pin	0-FSR, connect to the ground sense point for V_{BUS2}.
8	D1(2)	V_{BUS2+}(1)	Analog Input Pin	0-FSR, connect to V_{BUS2+}.
9	D2(2)	SENSE2–(1)	Analog Input Pin	0-FSR, connect to the low side of the sense resistor.
10	D3(2)	SENSE2+(1)	Analog Input Pin	0-FSR, connect to the low side of the sense resistor.
11	A3	SENSE1+	Analog Input Pin	0-FSR, connect to the low side of the sense resistor.
12	A2	SENSE1–	Analog Input Pin	0-FSR, connect to the low side of the sense resistor.
13	A1	V_{BUS1+}	Analog Input Pin	0-FSR, connect to V_{BUS1+}.
14	B1	V_{BUS1-}	Analog Input Pin	0-FSR, connect to the ground sense point for V_{BUS1}.
15	B2	GPIO/$\overline{\text{ALERT2}}$	Digital I/O Pin	Default: GPIO, Input mode. May be programmed to be the $\overline{\text{ALERT2}}$ pin indicator (open-drain) or the GPIO function (open-drain).
16	B3	$\overline{\text{PWRDN}}$	Digital Input Pin	Active-low puts the device in a Power-Down state (all circuitry is powered down, including SMBus).
17	—	EP	N/C	The Exposed Pad is not electrically connected.

Note 1: VQFN Package: for PAC1951-2, pins 7, 8, 9 and 10 are not connected inside and must be grounded.

2: WLCSP: for PAC1951-2, pins C1, D1, D2 and D3 are inactive and must be grounded.

3: Analog Input pins: for any unused channels, connect the SENSE+ and SENSE– pins to ground. Voltage may be applied to the analog input pins before or after V_{DD} is applied to the device. For PAC195X-2 devices, the SENSE+ and SENSE– pins have a Common-mode range from 0V to 32V.

4: For the analog input pins, the safe operating voltage range is up to 32V.

© 2021-2025 Microchip Technology Inc. and its subsidiaries

3.1 SENSE[N]+/– (N = 1, 2, 3, 4)

These two pins form the differential input for measuring voltage across a sense resistor in the application. The positive input (SENSE[N]+) also acts as the input pin for bus voltage.

3.2 Ground (GND)

System ground.

3.3 SMBus Data (SM_DATA)

This is the bidirectional SMBus data pin. This pin is open-drain and requires a pull-up resistor to V_{DD}.

3.4 SMBus Clock (SM_CLK)

This is the SMBus clock input pin and requires an external pull-up resistor, except if used in High-Speed mode, which requires a CMOS driver from the host.

3.5 Positive Power Supply Voltage (V_{DD})

Power supply input pin for the device. 2.7V to 5.5V range, bypass with 100 nF ceramic capacitor to ground near the IC.

3.6 Address Selection (ADDRSEL)

Connect a resistor from this pin to ground to select the SMBus address.

3.7 Enable Pin ($\overline{PWRDN}$)

Power-down input pin for the device, active-low.

3.8 SLOW/$\overline{ALERT1}$

In default mode, if this pin is forced high, the sampling rate is forced to 8 sps. When it is forced low, the sampling rate is 1,024 sps, unless a different sample rate has been programmed. This pin may be programmed to act as the $\overline{ALERT1}$ pin. In ALERT mode, the pin needs a pull-up resistor to V_{DD}. In GPIO mode, the default is an input but it can be configured as an output (open-drain).

3.9 GPIO/$\overline{ALERT2}$

In default mode, this pin is a GPIO input pin. It can be configured to be an output pin, as well as the ALERT2 function. This pin is an open-drain configuration and needs a pull-up resistor to V_{DD}.

3.10 Exposed Thermal Pad Pin (EP)

The Exposed Pad is not electrically connected. It is recommended that you connect it to ground.

© 2021-2025 Microchip Technology Inc. and its subsidiaries

4.0 GENERAL DESCRIPTION

PAC1951/2/3/4 is an up to four-channel, bidirectional, high-side/low-side current-sensing device with precision voltage measurement capabilities, DSP for power calculation and a power accumulator. PAC1951, PAC1952 and PAC1953 devices are one, two and three-channel versions of the PAC1954. These devices measure the voltage developed across an external sense resistor (V_{SENSE}) to represent the current of a battery or voltage regulator.

PAC195X also measures the SENSE+ pin voltages (V_{BUS}). Both V_{BUS} and V_{SENSE} are converted to digital results by a 16-bit ADC and the digital results are multiplied to give V_{POWER}. The V_{POWER} results are accumulated on-chip, which enables energy measurement over the accumulation period.

PAC195X has an I^2C/SMBus interface for digital control and reading results. A system diagram is shown in Figure 4-1 and Figure 4-2.

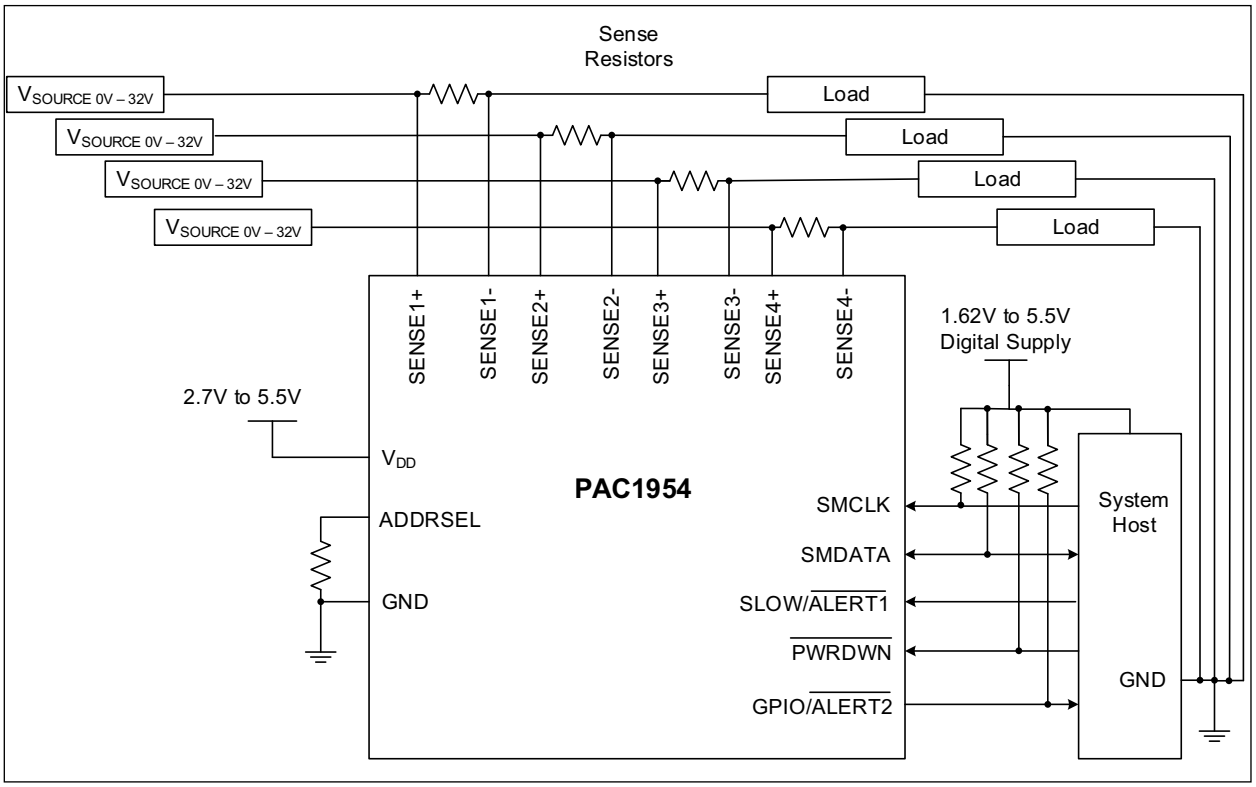

FIGURE 4-1: *PAC1951/2/3/4-1 Typical Application Diagram.*

© 2021-2025 Microchip Technology Inc. and its subsidiaries

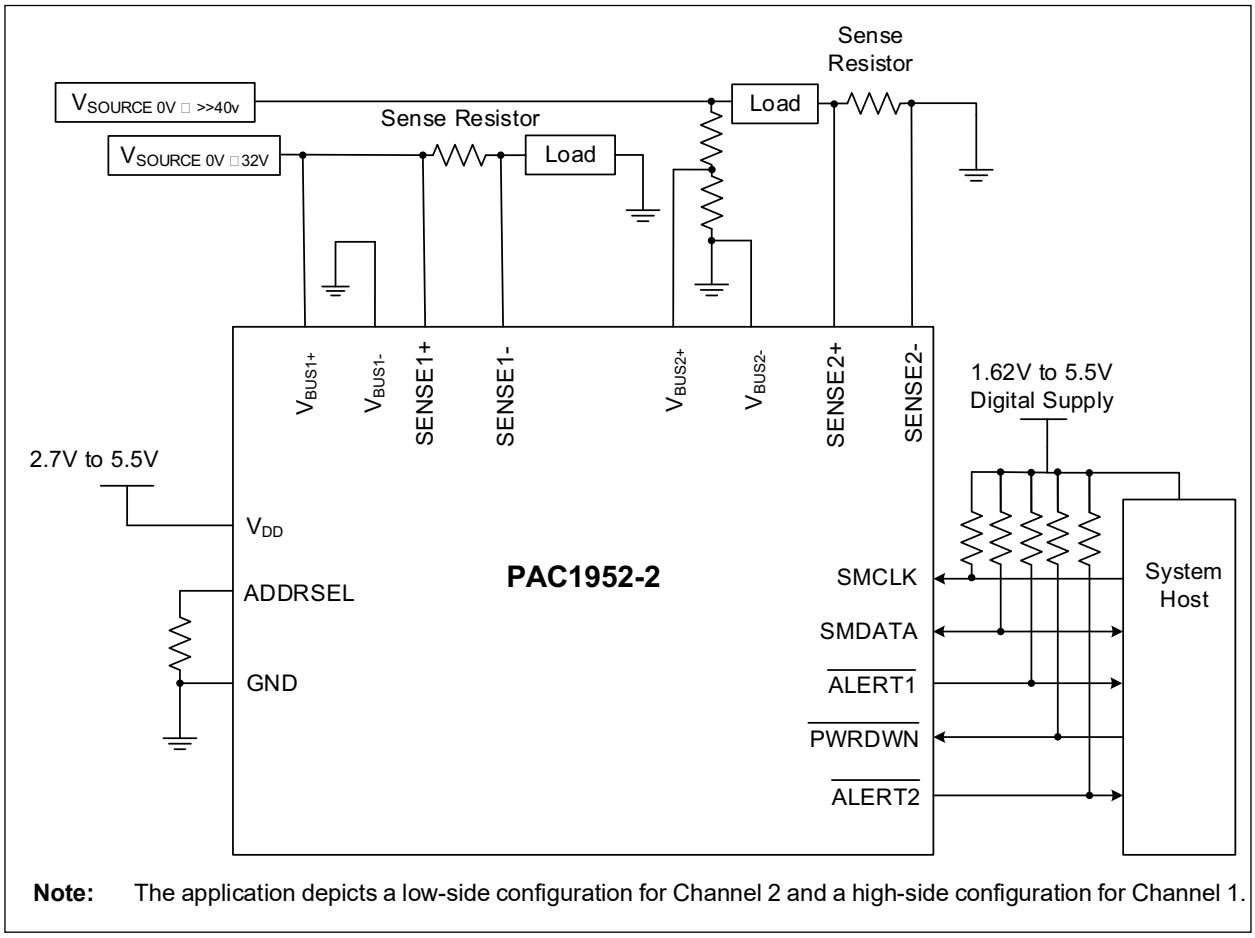

Note: The application depicts a low-side configuration for Channel 2 and a high-side configuration for Channel 1.

FIGURE 4-2: *PAC1951/2/3/4-2 Low-Side Typical Application Diagram.*

4.1 Layout Considerations

It is important to optimize the layout of the R_{SENSE} to ensure the most accurate measurements. When R_{SENSE} values are very low, resistor connections and solder joint variation can play a large role in the accuracy of the system. The figure below shows the recommended PCB pattern for a sense resistor (highlighted in red) with wide metal trace for the high-current path. The drawing shows metal, solder paste openings and the resistor outline. V_{SOURCE} connects to the +terminal of the high-current path and the load connects to the –terminal of the high-current path. SENSE+ and SENSE– have a Kelvin connection to the current sense resistor to ensure that no metal with high current is included in the V_{SENSE} measurement path. SENSE+ and SENSE– must be routed as a differential pair to the SENSE inputs at the chip. The input pins allow for a typical V_{SENSE} trace resistance of 1 kΩ, which allows the routing flexibility far from the chip itself on the board.

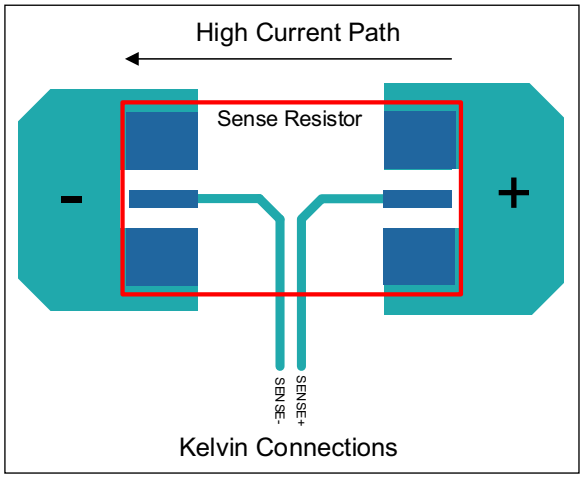

FIGURE 4-3: *PCB Pattern for Sense Resistor.*

5.0 DEVICE OVERVIEW

A high-voltage multiplexer connects the input pins to the V_{BUS} and V_{SENSE} amplifiers. The amplifier outputs are sampled simultaneously for each channel, converted by 16-bit ADCs and processed for gain and offset error correction. After each conversion, V_{BUS} and V_{SENSE} are multiplied together to give V_{POWER}.

An internal oscillator and digital control signals control the two ADCs and the multiplexer. The multiplexer sequentially connects each channel's amplifiers to the ADC inputs.

PAC1951-1, PAC1952-1, PAC1953-1 and PAC1954-1 devices share a pin for the V_{BUS} measurement and the source-side voltage V_{SENSE+} across an external current sense resistor, R_{SENSE}. This enables four input channels with eight pins. For PAC1951-2 and PAC1952-2, the chip allows V_{BUS+} and V_{BUS-} to go to separate pins for two channels, unconnected from the V_{SENSE+} and $V_{SENSE–}$ pins. This enables the low-side current measurement.

5.1 Initial Operation

After Power-on Reset and a start-up sequence, the device is in the Active state and begins sampling the inputs sequentially. Voltage and current are sampled for all active channels and power is calculated and accumulated. All active channels are sampled at 1,024 sps by default. Sample rates of 256, 64 or 8 sps may be programmed over the I^2C or SMBus. If the SLOW pin is asserted, the sample rate is 8 sps. For sampling rates lower than 1,024 sps, the device is in Sleep mode for a portion of the conversion cycle, which results in lower power dissipation. If fewer than four channels are active, power is also reduced.

To read accumulator data and reset the accumulators, the REFRESH command is used. To read the voltage, current, power and accumulator data without resetting the accumulators, the REFRESH_V command is used. Changes to the Control register (01h) are activated by sending any REFRESH command. When a new value is written to the Control register (01h), the new values take effect after the current round-robin cycle (actively sampling) or before the next round-robin sampling cycle following any REFRESH command.

5.2 REFRESH Command

The host sends the REFRESH command after changing the Control register and/or before reading accumulator data from the device. The host controls the accumulation period in this manner.

The readable registers for the V_{BUS}, V_{SENSE}, Power, accumulator outputs and accumulator count are updated by the REFRESH command and the values are static until the next REFRESH command.

These readable registers are stable within 1 ms from sending the REFRESH command and may be read by the host at any time up until the next REFRESH command is sent.

Note:	In Burst/Fast modes with one or more channels disabled, the 1 ms REFRESH delay is 200 µs per channel, with an additional 200 µs delay in Fast mode for the calibration channel. The internal accumulator values and accumulator count are reset by the REFRESH command, but the sampling of the inputs, data conversion and power integration are not interrupted and continue as determined by the settings in the Control register.

Changes written to the Control and Configuration registers take effect within 1 ms after a REFRESH command is sent. Any new commands written within this 1 ms window are ignored and NACKed to indicate that they are ignored.

The values for V_{BUS} and V_{SENSE} measurement results and Power calculation results respond to the REFRESH command in the same fashion as the accumulators and accumulator count. The readable registers are stable within 1 ms from sending the REFRESH command and may be read by the host at any time. The internal values continue to be updated according to the sampling plan determined by the settings in the Control register. The results that are sent to the readable registers for V_{BUS}, V_{SENSE} and Power are the values from the most recent complete conversion cycle. See Register 7-1.

5.3 REFRESH_G Command

The REFRESH_G command is identical in every respect to the REFRESH command, but it is used with the I^2C General Call address (0000 000). This allows the system to issue a REFRESH command to all PAC1951/2/3/4 devices in the system with a single command. After the REFRESH_G command, the data may be read device by device to capture a snapshot of the system power and energy for all devices (see Register 7-12). Note that the REFRESH_G command can also be used with a valid client address, but in this case, only the device with this client address receives the command. In other words, it has the same properties as the REFRESH command with the possibility of being compatible with the I^2C General Call address.

© 2021-2025 Microchip Technology Inc. and its subsidiaries

5.4 REFRESH_V Command

If the user wants to read V_{SENSE} and V_{BUS} results, the most recent Power calculation and/or the accumulator values and count without resetting the accumulators, the REFRESH_V command may be sent. Sending the REFRESH_V command and waiting 1 ms ensure that the V_{SENSE}, V_{BUS}, Power, accumulator output and accumulator count values are stable when read by the host.

Note:	In Burst/Fast modes with one more channels disabled, the 1 ms REFRESH delay is 200 µs per channel, with an additional 200 µs delay in Fast mode for the calibration channel. The internal accumulator values and accumulator count are reset by the REFRESH command, but the sampling of the inputs, data conversion and power integration are not interrupted and continue as determined by the settings in the Control register.

The sampling of the inputs, data conversion and power integration are not interrupted and continue as determined by the settings in the Control register. The data in these readable registers remains stable until the next REFRESH or REFRESH_V/G command. The internal accumulator values and accumulator count are unaffected by the REFRESH_V command.

Note that the REFRESH_V command may also be used to activate changes to the Control register, just like the REFRESH command, except with the REFRESH_V command, changes to the Control register is enacted without resetting the accumulators or accumulator count (see Register 7-13).

5.5 Sleep State

The Sleep state is a lower power state than the Active state. While in this state, the device draws a supply current of I_{SLEEP} from the V_{DD} pin. The device automatically goes to this state between conversion cycles when sampling rates lower than 1,024 sps are selected or if fewer than four channels are active. All digital states and data are retained in Sleep state. The device can be put in Sleep state by writing to Register 7-2, followed by a REFRESH or REFRESH_V command. Sampling resumes when a sampling mode is selected in this register, followed by a REFRESH of REFRESH_V command. The device does not go into Sleep state based on any other condition such as static conditions on the SMBus pins. If the SMBus time-out is enabled, it is supported in Sleep mode or Active mode.

5.6 Power-Down State

The Power-Down state is entered only by pulling the $\overline{\text{PWRDN}}$ pin low. In this state, all circuits on the chip including the SMBus pins are inactive and the device is in a state of minimum power dissipation.

In the Power-Down state, no data are retained in the chip (neither register configuration nor measurement data). When the $\overline{\text{PWRDN}}$ pin is pulled high, integration, measurement and accumulation resume using the default register settings. The first measurement data may be requested by a REFRESH or REFRESH_V command 50 ms after the $\overline{\text{PWRDN}}$ pin is pulled high.

There is a bit called POR in Register 7-10 that is set to '1' on POR. This bit may be used to detect that a POR has occurred as follows:

1. After the initial POR, clear this bit.
2. Poll the register to see if the bit is still cleared.
3. If the bit is set when polled, a POR has occurred and the device needs to be reprogrammed (unless operating it with the default programming for all registers).

5.7 Slow Sampling State and $\overline{\text{ALERT1}}$

If the SLOW/$\overline{\text{ALERT1}}$ pin is pulled high, the device samples at 8 sps. No matter the programmed sample rate, this new SLOW sample rate takes effect on the next conversion cycle (if a round-robin conversion cycle is in process when the SLOW pin goes high, that conversion cycle completes before the SLOW sample rate takes effect).

The SLOW pin can function as the $\overline{\text{ALERT1}}$ pin instead of the conversion rate control described above. See **Section 5.16, "ALERT Functionality"** for a complete discussion on the ALERT functionality, including the $\overline{\text{ALERT2}}$ pin. If this ALERT1 functionality for the SLOW pin is enabled, the pin can no longer be used to control the conversion rate. If a pull-up resistor is attached to the SLOW/$\overline{\text{ALERT1}}$ pin for ALERT1 functionality, the device powers up in Slow mode because of being pulled up at power-up. Once the ALERT1 functionality is assigned to the pin (see Register 7-2), conversion proceeds at the default or programmed rate.

The SLOW pin functionality and the ALERT1 functionality cannot be used at the same time on this pin.

If the SLOW pin is configured to serve as an $\overline{\text{ALERT}}$ pin, the slower sampling rate of 8 sps is available by programming Register 7-2.

If the device is programmed for Single-Shot mode and the SLOW pin is asserted, the first sampling begins approximately 1 ms after the SLOW pin is asserted to allow for the analog circuitry to power up. If the device is in the Sleep state, asserting the SLOW pin does not cause sampling to start.

© 2021-2025 Microchip Technology Inc. and its subsidiaries

Whenever the SLOW pin changes the state, a limited REFRESH or REFRESH_V command may be executed by the chip hardware (default is REFRESH). Like any other REFRESH command, this resets the accumulators and accumulator count for a REFRESH command and updates the readable registers for either REFRESH or REFRESH_V. These are limited REFRESH commands because no programmed changes to the Control or Status registers take effect (Control and Status registers are registers 01h, 1Ch, 1Dh and 20h-26h). The readable registers are stable with the new values within 1 ms of the SLOW pin transition.

The Slow register allows a selection of REFRESH or REFRESH_V commands on the SLOW pin transitions, allows this function to be disabled for either edge and also tracks both the state of the SLOW pin and the transitions on the SLOW pin (see Register 7-14).

5.8 Voltage Measurement

The V_{BUS} voltage for each channel is measured by the SENSE+ pin for each channel. A high-voltage multiplexer is connected to each SENSE+ pin and the multiplexer sequentially connects each SENSE+ pin to an ADC input for conversion. The result is stored in a 16-bit V_{BUS} results register and the 14 MSBs are multiplied by the V_{SENSE} number for the V_{POWER} results value. The V_{POWER} results are accumulated in the accumulator.

For PAC1951/2/3/4, the default FSR is 32V. The device may be programmed for bipolar V_{BUS} measurements. In this Bipolar mode, the mathematical range for V_{BUS} numbers is ±32V, the actual range is limited to about -200 mV due to the impact of the ESD structures. This bipolar capability for V_{BUS} enables accurate offset measurement and correction. For bipolar operation, the 16-bit V_{BUS} result is a two's complement (signed) number.

The measured voltage at SENSE+ can be calculated using the following equation. The FSR value stays the same but the maximum range is divided in half.

EQUATION 5-1: BUS VOLTAGE

$$V_{SOURCE} = 32V \times \frac{V_{BUS}}{Denominator}$$

Where:

V_{SOURCE}	=	The measured voltage on the SENSE+ pin
V_{BUS}	=	The value read from the V_{BUS} results registers
Denominator	=	2^{16} for unipolar measurements
	=	2^{16} for FSR/2 measurements
	=	2^{15} for bipolar measurements

5.9 Current Measurement

PAC1951/2/3/4 includes high-side current sensing circuits. These circuits measure the voltage (V_{SENSE}) induced across a fixed external current sense resistor (R_{SENSE}) and store the voltage as a 16-bit number in the V_{SENSE} results registers.

PAC1951/2/3/4 current sensing operates with a FSR of 100 mV in Unidirectional mode (default).

When sensing unidirectional currents (the default mode), the ADC results are presented in unsigned binary format. For bidirectional current sensing, the ADC results are in two's complement (signed) format. For bipolar current measurements, the range is ±100 mV, but use FSR = 100 mV in the equations that follow. For best accuracy on current values near zero, it is recommended to use the bidirectional current mode and 8X average current results.

5.10 Selecting R_{SENSE} Values

R_{SENSE} can easily be calculated if the maximum current sensed is known, as shown in the following equation. Consider the need to select a value for I_{Max} that includes current peaks well beyond your nominal current.

EQUATION 5-2: CALCULATING R_{SENSE}

$$R_{SENSE} = \frac{FSR}{I_{Max}}$$

Where:

FSR	=	Full-scale V_{SENSE} voltage input
R_{SENSE}	=	External R_{SENSE} resistor value
I_{Max}	=	Maximum current to measure

Full-Scale Current (FSC) can be calculated using Equation 5-3.

EQUATION 5-3: FULL-SCALE CURRENT

$$FSC = \frac{100\ mV}{R_{SENSE}}$$

Where:

FSC	=	Full-Scale Current
R_{SENSE}	=	External sense resistor value

© 2021-2025 Microchip Technology Inc. and its subsidiaries

The actual current through R_{SENSE} can then be calculated using Equation 5-4.

EQUATION 5-4: SENSE CURRENT

$$I_{SENSE} = FSC \times \frac{V_{SENSE}}{Denominator}$$

Where:

I_{SENSE}	=	Actual bus current
FSC	=	Full-Scale Current value (from Equation 5-3)
V_{SENSE}	=	The value read from the V_{SENSE} results registers
Denominator	=	2^{16} for unipolar measurements
	=	2^{16} for FSR/2 measurements
	=	2^{15} for bipolar measurements

5.11 FSR/2 RANGES

The PAC1951/2/3/4 has a new mode called FSR/2. In this mode, the FSR may be reduced by a factor of two for V_{SENSE} and/or V_{BUS}. This mode is programmable on a channel by channel basis, for V_{SENSE} and/or V_{BUS} for each channel. Because of the way the ADC's 17-bit bipolar results are manipulated, in Bipolar/Bidirectional modes, the 16-bit resolution is maintained in FSR/2 and the graphs provided are valid for this mode.

The modes can be enabled for V_{SENSE} and/or V_{BUS} by setting bits in Register 7-19.

TABLE 5-1: FSR/2 RANGES – V_{BUS}

V_{BUS} Range	PAC1951/2/3/4, FSR = 32V, FSR/2 = 16V	Denominator for Equation 5-1
Unipolar 0-FSR	0.48 mV/LSB	2^{16}
Bipolar +/-FSR	0.976 mV/LSB	2^{15}
Bipolar +/- FSR/2	0.48 mV/LSB	2^{16}

TABLE 5-2: FSR/2 RANGES – V_{SENSE}

V_{SENSE} Range	PAC1951/2/3/4, FSR = 100 mV, FSR/2 = 50 mV	Denominator for Equation 5-4
Unipolar 0-FSR	1.5 µV/LSB	2^{16}
Bipolar +/-FSR	3.05 µV/LSB	2^{15}
Bipolar +/- FSR/2	1.5 µV/LSB	2^{16}

© 2021-2025 Microchip Technology Inc. and its subsidiaries

5.12 ADC Measurements, Offset and 8X Averaging

PAC1951/2/3/4 devices are primarily designed for energy measurements where many power readings are accumulated. This is inherently an averaging process. Individual voltage and current measurements can also benefit from averaging to reduce noise and offset. Averaged values are internally calculated for V_{BUS} and V_{SENSE}, with a rolling average of the most recent eight values present in Register 7-7 and Register 7-8. The average is updated internally after every conversion cycle. The readable registers are updated with REFRESH, REFRESH_V or REFRESH_G commands like all the other readable results registers. These averaged results may be used for the most accurate, lowest noise and lowest offset measurements.

The ADC channels use a special offset canceling technique. If users observe the unaveraged results for near-zero values of V_{BUS} and V_{SENSE}, they may observe a cyclical pattern of offset variation. The user may think this is noise, but in fact it is due to internal circuitry switching through different permutations of offset cancellation circuitry. This small variation in unaveraged offset is canceled in the 8X averaged result and minimized in single-sample results via the offset calibration channel. It is also canceled in the Power Accumulator results. The overall effect is offset that is consistently very close to zero LSB over supply and temperature variations.

The offset canceling technique is illustrated in the following figure. It is very difficult to accurately observe, as it is a challenge to read the data from every conversion cycle. The effect of capturing data points at a rate that does not correspond exactly to the internal sampling rate of PAC1951/2/3/4 can make these permutations appear less periodic and deterministic than they are inside the chip. The data conversion uses one of the permute positions 1-4 for each input on each conversion, cycling through all four permutations in four conversions. When averaged, the permute enabled result shown below is realized, evenly distributed around zero.

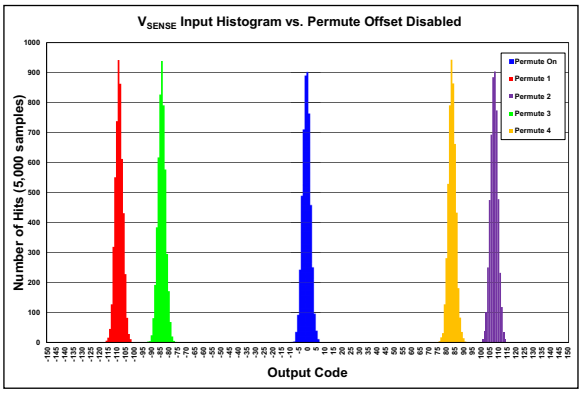

FIGURE 5-1: *Illustration of the Four Permute Combinations that the ADC Cycles through and the Resulting Low Average Offset. Each Bin Represents One Code.*

Results from both the V_{BUS} and the V_{SENSE} ADCs are 17-bit two's complement (signed) internally. There is an additional bit of resolution that is not accessible from the results register. Register 7-11 determines whether the conversion results are reported in the readable registers as unipolar or bipolar numbers. Using bipolar numbers can give more accurate results for very small numbers that may actually be negative for some readings, in addition to measuring bidirectional currents (charging/discharging) and voltages that can dip below ground.

Averaged values are also calculated for V_{BUS} and V_{SENSE}. A rolling average of the most recent eight values is present in Register 7-7 and Register 7-8. These registers require eight conversion cycles after POR before they represent an accurate value, they are updated after every conversion cycle. The readable registers are updated with REFRESH, REFRESH_V or REFRESH_G commands like all the other readable results registers.

© 2021-2025 Microchip Technology Inc. and its subsidiaries

5.13 Power and Energy

PAC1951/2/3/4 has a 56-bit accumulator and a 32-bit accumulator counter:

- 56 bits for accumulator
- 32 bits for accumulator count
- 30 bits for the power realized by multiplication of the 17-bit current number and a 14-bit voltage number

The FSR for power depends on the external sense resistor used, as shown in Equation 5-5.

EQUATION 5-5: POWER FSR CALCULATION

$$PowerFSR = (100\ mV / R_{SENSE}\Omega) \times 32V$$

$$PowerFSR = (3.2V^2) / R_{SENSE}\Omega$$

Where:

$R_{SENSE}\Omega$	=	External R_{SENSE} resistor value
$100\ mV$	=	Full-scale V_{SENSE} voltage input
$32V$	=	Full-scale V_{BUS} voltage input

The device implements power measurements by multiplying V_{BUS} and V_{SENSE} to give a V_{POWER} result. V_{POWER} values are used to calculate the proportional power, as shown in the equation below. The proportional power is the fractional portion of the FSR power measured in one sample.

EQUATION 5-6: PROPORTIONAL POWER CALCULATION

$$P_{PROP} = \frac{V_{POWER}}{Denominator}$$

Where:

Denominator	=	2^{30} (Unipolar mode)
	=	2^{30} (FSR/2 mode)
	=	2^{29} (Bipolar mode)

To calculate the actual power from the proportional power, multiply by the FSR power, as shown in the equation below. This actual power number is the power measured in one sample.

EQUATION 5-7: POWER CALCULATION

$$P_{ACTUAL} = PowerFSR \times P_{PROP}$$

These V_{POWER} results are digitally accumulated on chip and stored in the V_{ACCN} registers.

The energy calculation in Equation 5-8 and **5-9** uses a different denominator term depending on the Unipolar or Bipolar mode. Bipolar mode for energy applies when the Bipolar/Bidirectional mode is used for V_{BUS} and/or V_{SENSE}. Equation 5-8 shows how to realize this using the accumulator results, accumulator count and the accumulation period, t_{ACC}. In Equation 5-8, T must be known from a system clock time stamp or other accurate indicator of the total accumulation period.

EQUATION 5-8: ENERGY CALCULATION

$$Energy = \frac{V_{ACCN}}{Denominator} \times (PwrFSR) \times \frac{t_{ACC}}{AccCount}$$

Where:

Denominator	=	2^{30} (Unipolar mode)
	=	2^{30} (FSR/2 mode)
	=	2^{29} (Bipolar mode)

EQUATION 5-9: ENERGY CALCULATION

$$Energy = \frac{V_{ACCN}}{Denominator} \times \frac{(PwrFSR)}{f_S}$$

Where:

Denominator	=	2^{30} (Unipolar mode)
	=	2^{30} (FSR/2 mode)
	=	2^{29} (Bipolar mode)

Equation 5-9 shows how to calculate energy using the accumulated power and the sampling rate, f_S.

5.13.1 ADAPTIVE ACCUMULATOR

PAC1951/2/3/4 has a feature called Adaptive Accumulator mode. In this mode, sampling is programmed at one of the valid sample rates and samples are accumulated. If the SLOW pin is asserted and the device begins sampling at 8 sps, these samples are shifted by 7 bits to the left and accumulated so as to simulate sampling at the maximum sampling rate, 1,024 sps, and the accumulator count is also incremented by 128 for each sample in Slow mode (when using the Adaptive Accumulator mode) to simulate samples being accumulated at the maximum sampling rate.

This offers a big reduction in host overhead and bus traffic for systems that need to use the SLOW pin for lower power operation during certain times and want to have continuous accurate energy monitoring for both the maximum sampling rate and the SLOW sampling rate.

© 2021-2025 Microchip Technology Inc. and its subsidiaries

As shown in Equation 5-8 and Equation 5-9, it is necessary to know the sampling frequency and sampling period for each interval that we want to accumulate energy over. If the SLOW pin is used and the period changes, the accumulator value and count must be fetched and calculated each time the sampling rate changes. With the adaptive accumulator, the data only need to be fetched before the accumulator and/or accumulator count overflow and an accurate energy calculation can be made, independent of how many times the SLOW pin was asserted and deasserted during the period. The sample rate for these calculations is the programmed sample rate.

Because the Adaptive Accumulator mode is the default mode, the feature of an internal REFRESH being generated on assertion/deassertion of the SLOW pin is defaulted to inactive. The user must manually program a REFRESH on SLOW pin transition, if desired, using Register 7-14.

By programming one of the adaptive accumulator sampling rates in Register 7-2 other than 1,024 sps, the accumulator and accumulator count shift the data and count to mimic accumulation at 1,024 sps.

5.13.2 ADDITIONAL ACCUMULATOR INFORMATION

The math for the power calculation and accumulation inside the chip is always done in two's complement math, no matter what the user sets the output registers to show. V_{BUS} and V_{SENSE} are 17-bit two's complement (signed) numbers internally. V_{POWER} is the product of V_{SENSE} multiplied by the 14 MSBs of V_{BUS} and this is a 30-bit two's complement result (signed) internally. In some cases, this results in a power result that is not identical to the product of the V_{BUS} results register multiplied by the V_{SENSE} register. However, the power result from the V_{POWER} results register is more accurate than the product of the V_{BUS} register multiplied by the V_{SENSE} register in these cases, as explained below.

If V_{SENSE} and V_{BUS} are both programmed to be unsigned (unipolar) in register Register 7-11, 16 bits without sign are exported to the V_{BUS} and V_{SENSE} results registers.

If V_{BUS} is programmed to be signed (bipolar) in Register 7-11, the corresponding data are truncated to 16-bit two's complement (signed) for the readable results register.

If V_{SENSE} is programmed to be signed (bidirectional) in register Register 7-11, the corresponding V_{SENSE} register value is truncated to 16-bit two's complement, but the power calculation uses 17-bit two's complement. Therefore, a mismatch is possible between an externally calculated power value (V_{BUS} times V_{SENSE}) and the actual power value calculated internally to the chip.

The internally calculated (and accumulated) value is more accurate than the externally calculated value in every case.

This is also true for FSR/2 modes, in that the FSR/2 mode uses bit shifting to change the FSR so no accuracy is lost in the power calculation (similar to Unipolar mode).

The continuous power integration periods (also called energy accumulation periods) can range from ~1 ms to many hours, depending on the number of samples per second selected via SMBus. The number of samples is limited by the size of the Accumulator Count register to 4,294,967,296 (2^{32}). This count corresponds to about 1165 hours at 1,024 sps or about 17 years at 8 sps. This accumulator count can overflow and it does not reset when it overflows.

When the accumulation registers reach their maximum value, this is called accumulator overflow. The accumulator outputs remain at their maximum value; they do not rollover. The user can calculate the worst-case time to saturation and read them at or before that time or use the accumulator fullness limits to detect when the accumulators and/or accumulator count are 15/16, 7/8, 3/4 or completely full and read and/or reset them at that time (see Register 7-23).

Worst-case accumulator overflow time can be calculated assuming that every measurement that is accumulated is a full-scale number. Since the power numbers are 30 bits and the accumulator is 56 bits, 2^{26} samples can be accumulated before overflow, if they are all full-scale values. For most applications, they are not all full-scale numbers; this is especially true if V_{BUS} is nominally less than the maximum V_{BUS} for the device. If the maximum V_{BUS} for the system is always lower than FSR for V_{BUS}, the maximum number of full-scale samples that can be accumulated is scaled by FSR/V_{BUS} maximum for the system. If both V_{BUS} and V_{SENSE} values are always near full scale, this can limit the accumulation period before overflow to 1,092 minutes at 1,024 sps or 2,330 hours at 8 sps. If sample values are well below full scale, the user can calculate how many samples can be accumulated before the accumulator overflows. As described above, the accumulator count does not limit the number of samples that can be accumulated and counted.

© 2021-2025 Microchip Technology Inc. and its subsidiaries

5.13.3 ALTERNATIVE USES FOR THE ACCUMULATOR

For PAC1951/2/3/4, the accumulator may be used to accumulate V_{SENSE} or V_{BUS} values instead of V_{POWER} values for any channel. This functionality is invoked by setting bits in Register 7-19.

Setting the accumulator for a channel to accumulate V_{SENSE} values gives a measure of accumulated current, which is equivalent to charge. This allows the accumulator to be used as a coulomb counter.

For either V_{SENSE} or V_{BUS}, many samples may be accumulated on chip and the result collected by the host and divided by the accumulator counter count value to yield an average value with a very long integration time to reduce noise. This feature is also very useful for system calibration, allowing many averages to be accumulated for fast averaging/noise reduction. Calibration time can be further reduced by combining this with the Fast mode.

5.14 Conversion Cycles

A conversion cycle for the device consists of the analog-to-digital conversion being complete for all channels (including the real-time calibration that is part of each conversion cycle). Immediately following the data conversion, the power results are calculated for that channel and the power value is added to the accumulator. Averaged values for V_{SENSE} and V_{BUS} are also updated internally as part of each conversion cycle.

Data conversion and processing are performed for each active channel in sequential fashion until all active channels are converted, completing the conversion cycle for the device. The sequential sampling of each channel, along with the calculation time and any sleep time needed to set the overall sampling rate, is referred to as a round-robin sampling period.

5.15 Conversion Cycle Controls

5.15.1 REDUCING THE NUMBER OF CHANNELS TO BE SAMPLED

Register 7-2 allows the user to reduce the number of channels that are active. The sample rate is unaffected, but power dissipation is reduced if some channels are disabled. Any or all channels may be disabled; if all channels are disabled, the device goes into Sleep mode.

5.15.2 BURST MODE

For PAC1951/2/3/4, Burst mode is added for faster sampling. In this mode, the round-robin sequencer enables each active channel sequentially and restarts the round-robin sequence again without sleeping in between as it normally does. The fifth channel that is used for offset canceling is not sampled in this mode. The previous value for offset canceling is repeatedly used, so sampling is not as accurate if this mode is used for long periods of time, especially if temperature changes, although the 8X average accuracy is not significantly affected.

The effective sampling mode changes with the number of active channels, as shown in Table 5-3. The Burst mode is enabled by setting a bit in Register 7-2.

TABLE 5-3: BURST MODE ENABLED

Active Channels	Sampling Frequency
1	1024*5/1 = 5120 sps
2	1024*5/2 = 2560 sps
3	1024*5/3 = 1706 sps
4	1024*5/4 = 1280 sps

5.15.3 FAST MODE

Fast mode is also a mode for faster sampling. It is similar to Burst mode, only in Fast Mode, the fifth channel is converted and used for continuous offset correction.

The effective sampling mode changes with the number of active channels, as shown in Table 5-4. The Burst mode is enabled by setting a bit in Register 7-2.

TABLE 5-4: FAST MODE ENABLED

Active Channels	Sampling Frequency
1	1024*5/2 = 2560 sps
2	1024*5/3 = 1706.6 sps
3	1024*5/4 = 1280 sps
4	1024*5/5 = 1024 sps

© 2021-2025 Microchip Technology Inc. and its subsidiaries

5.15.4 SINGLE-SHOT MODE

The Control register also allows the device to operate in Single-Shot mode. In this mode, all active channels sample and convert, followed by results being calculated. The accumulator and accumulator count operate the same as for Continuous Conversion mode, accumulating each single-shot power calculation and incrementing the accumulator count. The conversion cycle starts when the REFRESH command (or REFRESH_V/REFRESH_G) is sent.

After the single-shot measurements and calculations are complete, the device goes into Sleep mode. A REFRESH, REFRESH_G or REFRESH_V command may be sent to read the data. The user needs to wait about 2 ms after the REFRESH command before commanding another single-shot conversion, by means of sending one of the REFRESH commands. This is because a 1 ms delay is required between REFRESH commands and coming out of Sleep requires 1 ms (band gap start-up delay). In general, single-shot commands are not this close together in time; instead, one of the lower sampling rates is used.

There is an option to use a single REFRESH command to collect eight samples and average them in Single-Shot 8X mode. This reduces noise and offset in the result (see Register 7-2). In this mode, all eight samples are added to the accumulator and the accumulator count is incremented by eight each time a REFRESH is sent to trigger an additional Single-Shot 8X acquisition and conversion.

In Single-Shot 8X mode, the 8X averaged result is read from the 8X averaged registers (Register 7-7 and Register 7-8) and the unaveraged result registers (Register 7-5 and Register 7-6) hold the last of the 8 samples.

5.16 ALERT Functionality

The ALERT functionality has multiple purposes: to notify the system that a conversion cycle for all active channels is complete, to notify the system that the accumulator or accumulator count has overflowed or that an electrical parameter is outside the programmed limit.

Alerts cause the $\overline{\text{ALERT}}$ pin to be asserted low and latched low. The only exception to this is for the ALERT after COMPLETE CONVERSION, this causes a 5 µs pulse of the $\overline{\text{ALERT}}$ pin. Alerts are set at the end of the round-robin cycle.

5.16.1 ALERT AFTER COMPLETE CONVERSION

Register 7-21 and Register 7-22 have bits ALERT_CC1 and ALERT_CC2 that can be used to enable the $\overline{\text{ALERT}}$_CC function. If this bit is set, the assigned $\overline{\text{ALERT}}$ pin goes low for 5 µs after each round-robin conversion cycle is complete. This function may be used when you want to read data continuously as soon as each round-robin conversion cycle is complete.

Note:	When using the device in single-channel Burst mode, the Conversion Complete ALERT is not assert.

This Conversion Complete ALERT does not set a bit in Register 7-20.

5.16.2 $\overline{\text{ALERT}}$ PIN ASSIGNMENTS

The $\overline{\text{ALERT}}$ function may be assigned to either the SLOW/$\overline{\text{ALERT1}}$ pin or the GPIO/$\overline{\text{ALERT2}}$ pin. Use Register 7-21 and/or Register 7-22 to assign any of the ALERT functions to these pins.

To configure the SLOW/$\overline{\text{ALERT}}$ pin to function as $\overline{\text{ALERT}}$, use Register 7-2.

Note:	SLOW function of the SLOW/$\overline{\text{ALERT}}$ pin cannot be used once the ALERT function is programmed for this pin.

There is a general ALERT signal on bit 5 of the SMBus Settings (1Ch). This register bit can be monitored over the I^2C/SMBus or monitored on the $\overline{\text{ALERT}}$/SLOW, as mentioned above. This register does not require a Refresh signal to update the values, so it is easy to poll if the user desires.

5.16.3 USING THE $\overline{\text{ALERT}}$ PINS AS I/O PINS

The $\overline{\text{ALERT}}$ pins may also be used as I/O pins. This functionality is enabled in Register 7-2. When used as an I/O pin, there are bits for holding input and output data (read or to be written) in Register 7-10. This register does not need a Refresh to update it, so the input data may be read or the output data changed without affecting anything else.

© 2021-2025 Microchip Technology Inc. and its subsidiaries

5.16.4 ALERT FUNCTIONALITY – VOLTAGE, CURRENT AND POWER

The ALERT functionality enables the user to capture voltage and current events that exceed programmable limits, for one or more samples. The ALERT function may be monitored on a digital output pin by configuring one of the $\overline{\text{ALERT}}$ pins to correspond to a specific ALERT or to multiple ALERT signals using Register 7-21 or Register 7-22. The ALERT status may also be monitored over the I^2C/SMBus by reading Register 7-20.

The ALERT can be triggered by a variety of triggers:

- V_{BUS} overvoltage or undervoltage (OV or UV)
- V_{SENSE} overcurrent or undercurrent (OC or UC)
- Overpower (OP)
- Conversion cycle complete
- Accumulator/accumulator count hitting a limit for fullness or overflowing

The OV, UV, OC, UC and/or OP limits must be enabled for any of the channels that are using them, by setting a bit in Register 7-34. These limits are specified with two's complement values independent of whether Unipolar/Bipolar Or Unidirectional/Bidirectional modes are set for V_{BUS} and V_{SENSE} measurements. Only ALERT conditions that are enabled here are capable of triggering any ALERT.

5.16.5 ALERT THRESHOLD LIMITS

Each channel has programmable 16-bit limits for over-current, undercurrent, overvoltage and undervoltage. The overpower limit is a 24-bit number.

The thresholds for these ALERTs are set in Register 7-24, Register 7-25, Register 7-26, Register 7-27 and Register 7-28.

5.16.6 SAMPLES OVER LIMIT TO TRIGGER ALERT

The user can also program how many samples must exceed the threshold to trigger the $\overline{\text{ALERT}}$ pin (over limit samples). The default value for over limit samples is 1 (up to a maximum 16 samples), which means the ALERT is triggered on the first sample that exceeds the threshold. For OC, OP and OV, exceeding the threshold means a sample that is of larger value than the programmed limit. For UC and UV, exceeding the threshold means a sample that is of smaller value than the programmed limit. The OP limit differs slightly from the other limits in that it is always magnitude based. Thus a more positive value or negative value triggers an OP alert.

The user can program how many samples over the threshold are required to trigger the ALERT for each of these parameters in Register 7-28, Register 7-29, Register 7-31, Register 7-32 and Register 7-33.

5.16.7 ACCUMULATOR-BASED ALERTS

The ALERT function can also be programmed to trigger when the accumulator or accumulator count for any channel is filled to a specified amount. This amount can be programmed from 15/16 full through 7/8, 3/4 or completely full. This enables the user to maximize the accumulation time instead of simply planning for the worst case. The limits for each channel are specified in Register 7-23.

When the ALERT is tripped, the user can interrogate Register 7-20 to determine which conditional limit, which channel(s) or if the accumulator/accumulator count condition triggered the ALERT. The ALERT condition is cleared when these ALERT cause registers are read, specifically when the register that caused for the specific ALERT cause is read.

Register 7-20 is updated immediately on an ALERT condition, it does not require a REFRESH command.

When the ALERT function is tripped by accumulator overflow, it remains asserted until a REFRESH command is received. REFRESH_G also clears the ALERT bit and the ALERT function, while REFRESH_V does not.

5.16.8 ALERT CLEARING AND PERSISTENT FAULT CONDITIONS

If the over/undervoltage, over/undercurrent or overpower conditions that tripped the ALERT or accumulator full conditions are still present after the ALERT cause register is read (which clears all the bits in that register and resets the ALERT function), the ALERT function reasserts, if the next converted sample that detects the limit is exceeded.

Register 7-20 is cleared when it is read. If the ALERT condition is still present after the next conversion cycle is complete, the ALERT is reasserted.

© 2021-2025 Microchip Technology Inc. and its subsidiaries

6.0 SMBUS AND I²C COMMUNICATIONS PROTOCOL

PAC1951/2/3/4 communicates over a two-wire bus with a controller, using a SMBus or I²C serial communication protocol. A detailed timing diagram is shown in the Figure 6-1. Stretching of the SMCLK signal is supported. However, PAC1951/2/3/4 does not stretch the clock signal itself.

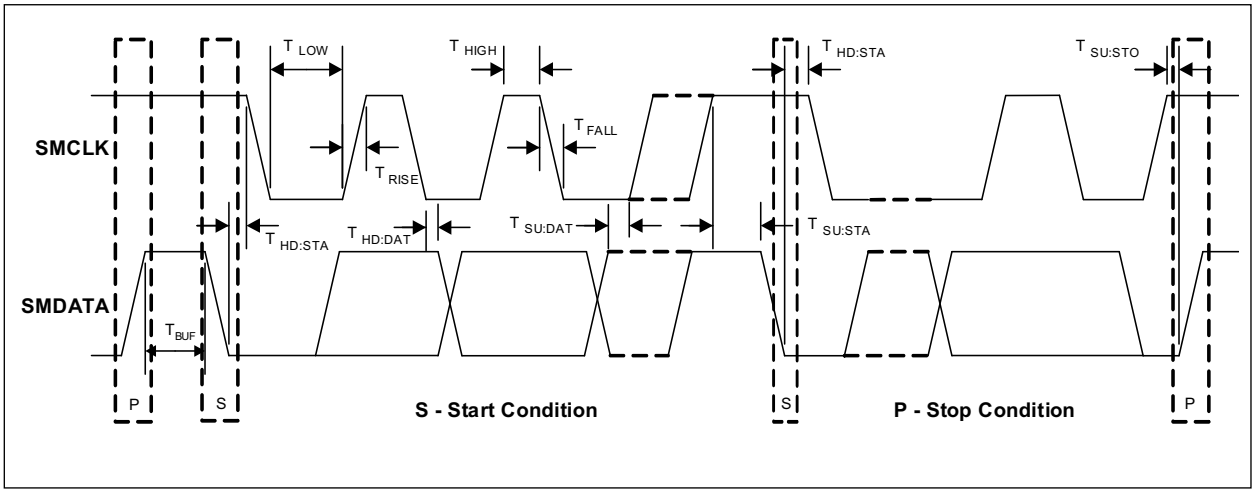

FIGURE 6-1: *SMBus Timing Diagram.*

6.1 I²C/SMBus Addressing and Control Bits

6.1.1 SMBUS ADDRESS AND RD/$\overline{WR}$ BIT

The SMBus Address byte consists of the 7-bit client address followed by a 1-bit RD/$\overline{WR}$ indicator. If this RD/$\overline{WR}$ bit is a logic '0', the SMBus host writes data to the client device. If this RD/$\overline{WR}$ bit is a logic '1', the SMBus host reads data from the client device.

The PAC1951/2/3/4 I²C/SMBus address is determined by a single pull-down resistor connected between ground and the ADDRSEL pin, as shown in Table 6-1. The chip translates the resistor value into an address on power-up and the value is latched until another power-up event takes place. The address cannot be changed on the fly.

6.1.2 SMBUS START BIT

The SMBus Start bit is defined as a transition of the SMBus data line from a logic '1' state to a logic '0' state, while the SMBus clock line is in a logic '1' state.

6.1.3 SMBUS ACK AND NACK BITS

The SMBus client acknowledge (ACK) all data bytes that it receives. This is done by the client device pulling the SMBus data line low after the eighth bit of each byte that is transmitted.

6.1.4 SMBUS STOP BIT

The SMBus Stop bit is defined as a transition of the SMBus data line from a logic '0' state to a logic '1' state, while the SMBus clock line is in a logic '1' state. When PAC1951/2/3/4 detects an SMBus Stop bit and it has been communicating with the SMBus protocol, it resets its client interface and prepares to receive further communications.

© 2021-2025 Microchip Technology Inc. and its subsidiaries

6.1.5 SMBUS DATA BYTES

All SMBus data bytes are sent MSb first and composed of 8 bits of information.

TABLE 6-1: ADDRESS SELECT RESISTOR

RESISTOR (1%)	SMBus Address
0 (GND)	0010 000 (R/W)
499	0010 001 (R/W)
806	0010 010 (R/W)
1,270	0010 011 (R/W)
2,050	0010 100 (R/W)
3,240	0010 101 (R/W)
5,230	0010 110 (R/W)
8,450	0010 111 (R/W)
13,300	0011 000 (R/W)
21,500	0011 001 (R/W)
34,000	0011 010 (R/W)
54,900	0011 011 (R/W)
88,700	0011 100 (R/W)
140,000	0011 101 (R/W)
226,000	0011 110 (R/W)
Tie to V_{DD}	0011 111 (R/W)

6.2 SMBus Time-out

PAC1951/2/3/4 devices can support the SMBus time-out functionality. This functionality is disabled by default and can be enabled by writing to the TIMEOUT bit (see Register 7-10).

If time-out is enabled and the clock is held at logic '0' for 25 to 35 ms, the device times out and reset the SMBus interface. Communication is restored with a Start condition.

6.3 SMBus and I²C Compatibility

PAC1951/2/3/4 is compatible with the SMBus 3.1 1 MHz class and the I²C Fast mode Plus. The major differences between SMBus and I²C devices are highlighted below (for more information, refer to the SMBus 3.1 and I²C specifications):

1. The minimum frequency for SMBus communications is 10 kHz, if the time-out function is enabled. If the time-out function is disabled (default condition), there is no minimum frequency for SMBus communications.
2. I²C does not have a time-out, this is the default condition. The SMBus client protocol resets if the clock is held at a logic '0' for $t_{TIMEOUT}$, if SMBus time-out is enabled in Register 7-10.
3. I²C devices do not support the Alert Response Address functionality (which is optional for SMBus). The PAC1951/2/3/4 does not support the Alert Response Address functionality. Instead, the $\overline{ALERT}$ pin, when configured for ALERT, is an open-drain output pin that may be monitored by the host or embedded controller.
4. I²C devices support Block Read and Block Write differently. The I²C protocol allows for an unlimited number of bytes to be sent in either direction. The SMBus protocol for Block Read and Block Write requires that an additional data byte indicating the number of bytes to read/write is transmitted. PAC1951/2/3/4 supports the I²C protocol for Block Read by default (no byte count information is sent). If the Byte Count bit is set (see Register 7-10), the Byte Count is sent as the first data byte in response to the Block Read command, per SMBus protocol.
5. SMBus uses fixed logic thresholds for logical high and low signals. I²C uses levels that are proportional to V_{DD}. PAC1951/2/3/4 uses fixed logic levels of 0.8V and 1.35V, as specified by SMBus.

6.4 I²C/SMBus Protocols

PAC1951/2/3/4 supports Write Byte, Block Write, Read Byte, Block Read, Send Byte and Receive Byte as valid protocols.

It does not respond to the Alert Response Address protocol. It responds to the I²C General Call Address.

All the protocol charts listed below use the convention in the table below.

TABLE 6-2: PROTOCOL FORMAT

Data Sent to Device	Data Sent to the Host
# of bits sent	# of bits sent

6.5 Auto-Incrementing Pointer

PAC1951/2/3/4 has an auto-incrementing address pointer. The pointer has two loops for auto-incrementing, a read loop and a write loop.

The read loop includes all the readable registers, all the configuration and control registers, the results registers, Product ID, Manufacturer ID and Revision ID registers.

The write loop includes only the writable control and configuration registers.

Neither loop includes the REFRESH commands.

The read loop skips the inactive channels, if some channels are disabled. This automatic channel skip feature can be disabled by setting the NO SKIP bit in Register 7-10.

There are two cases to consider when a channel is disabled and a read is performed on it:

- the SKIP function is OFF, the register address is ACKed and the data returned are FFh, followed by a NACK.
- the SKIP function is ON, the register address is NACKed and the data returned are FFh, followed by a NACK.

In the first case, the channel address is still part of the register map and is still a valid address, thus the I²C/SMBus ACK the address. In the second case, the channel address is removed from the register map and becomes an invalid address, thus the I²C/SMBus NACK the address. In both cases, the value returned is FFh, because the channel is disabled (invalid) and the I²C/SMBus NACK the data. See Figure 6-2 for a graphic representation.

Figure 6-2 shows how the auto-incrementing read loop works with the SKIP option on and off. It also shows how the write loop works with the REFRESH, REFRESH_V and REFRESH_G commands.

© 2021-2025 Microchip Technology Inc. and its subsidiaries

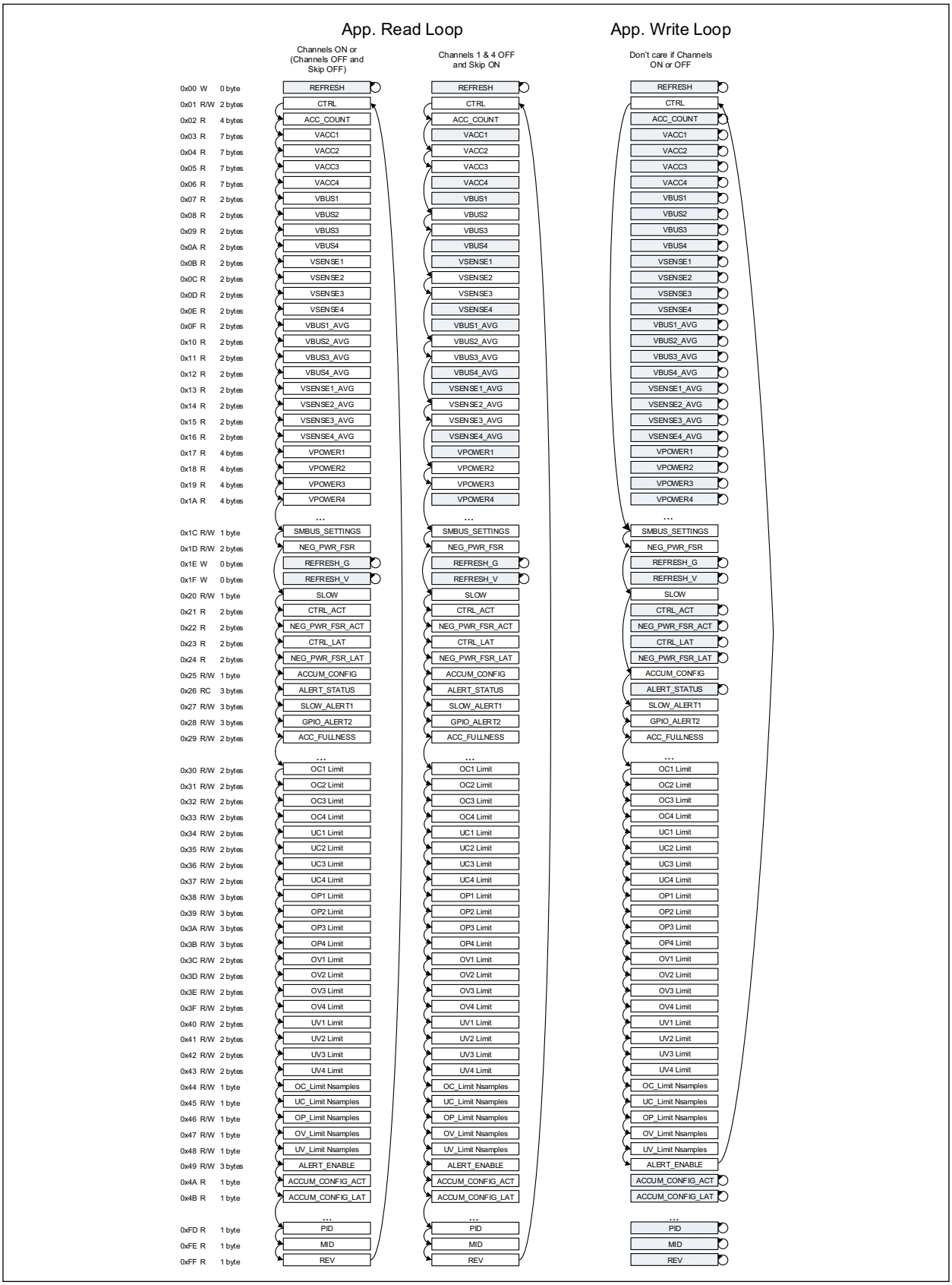

FIGURE 6-2: *Read and Write Auto-Incrementing Loops.*

6.6 I²C/SMBus Commands

6.6.1 REFRESH AND REFRESH_V

REFRESH and REFRESH_V commands are sent using the Send Byte command, the client address and the desired command (00h for REFRESH or 1Fh for REFRESH_V). See Table 6-3.

TABLE 6-3: REFRESH AND REFRESH_V COMMANDS

START	Client Address	WR	ACK	REFRESH or REFRESH_V Command	ACK	STOP
1 → 0	YYYY_YYY	0	0	00h or 1Fh	0	0 → 1

6.6.2 GENERAL CALL ADDRESS RESPONSE

When the host sends the General Call address, PAC1951/2/3/4 is able to execute the REFRESH command by means of a second version of the REFRESH command called REFRESH_G (see Register 7-12).

Just as the REFRESH command is sent using a Send Byte command with the client address and the REFRESH command (00h), the REFRESH_G command is sent using Send Byte with the General Call address (0000 000) and the REFRESH_G command (1Eh).

Table 6-4 shows the response to the General Call command for REFRESH_G.

TABLE 6-4: GENERAL CALL RESPONSE

START	General Call Address	WR	ACK	REFRESH_G Command	ACK	STOP
1 → 0	0000_000	0	0	1Eh	0	0 → 1

6.6.3 WRITE BYTE

The Write Byte is used to write one byte of data to the registers, as shown in Table 6-5.

TABLE 6-5: WRITE BYTE PROTOCOL

START	Client Address	WR	ACK	Register Address	ACK	Register Data	ACK	STOP
1 → 0	YYYY_YYY	0	0	XXh	0	XXh	0	0 → 1

6.6.4 READ BYTE

The Read Byte protocol is used to read one byte of data from the registers, as shown in Table 6-6.

If an invalid register address is specified, the client ACK its address but does not acknowledge (NACK) the register address.

The host NACK the data received from the client by holding the SMBus data line high after the eighth data bit is sent.

TABLE 6-6: READ BYTE PROTOCOL

START	Client Address	WR	ACK	Register Address	ACK	START	Client Address	RD	ACK	Register Data	NACK	STOP
1 → 0	YYYY_YYY	0	0	XXh	0	1 → 0	YYYY_YYY	1	0	XXh	1	0 → 1

© 2021-2025 Microchip Technology Inc. and its subsidiaries

6.6.5 SEND BYTE

The Send Byte protocol is used to set the internal address register pointer to the correct address location. No data are transferred during the Send Byte protocol, as shown in Table 6-7.

TABLE 6-7: SEND BYTE PROTOCOL

START	Client Address	WR	ACK	Register Address	ACK	STOP
1 → 0	YYYY_YYY	0	0	XXh	0	0 → 1

6.6.6 RECEIVE BYTE

The Receive Byte protocol is used to read data from a register when the internal register address pointer is known to be at the right location (for example, set via Send Byte). This is shown in Table 6-8.

When an ACK is received after the register data, the address pointer automatically increments.

When a NACK is received after the register data, the address pointer stays at the same position.

If the host wishes to continue clocking and reading the next register, the host ACK after the register data, instead of sending NACK followed by STOP.

If some channels are deactivated, their data registers are skipped by the auto-incrementing pointer. Alternatively, you may set bit 0 in Register 7-10 and the pointer does not skip the addresses associated with the inactive channels. The measurement data for these inactive channels reads FFh.

TABLE 6-8: RECEIVE BYTE PROTOCOL

START	Client Address	RD	ACK	Register Data	NACK	STOP
1 → 0	YYYY_YYY	1	0	XXh	1	0 → 1

6.6.7 BLOCK WRITE – I^2C VERSION

Block Write is used to write multiple data bytes from a register that contains more than one byte of data or from a group of contiguous registers, as shown in Table 6-9. PAC1951/2/3/4 supports I^2C Block Write by default, the SMBus format is not supported.

If an invalid register address is specified, the client ACK its address but NACK the register address.

The host NACK the data received from the client by holding the SMBus data line high after the eighth data bit is sent.

TABLE 6-9: BLOCK WRITE PROTOCOL – I^2C VERSION (DEFAULT)

START	Client Address	WR	ACK	Register Address	ACK	Register Data	ACK
1 → 0	YYYY_YYY	0	0	XXh	0	XXh	0
Register Data	**ACK**	**Register Data**	**ACK**		**Register Data**	**ACK**	**STOP**
XXh	0	XXh	0		XXh	0	0 → 1

6.6.8 BLOCK READ – I²C VERSION

Block Read is used to read multiple data bytes from a register that contains more than one byte of data or from a group of contiguous registers, as shown in Table 6-10. PAC1951/2/3/4 supports I²C Block Read by default, but the SMBus format can also be supported (see Table 6-11).

If an invalid register address is specified, the client ACK its address but NACK the register address.

The host NACK the data received from the client by holding the SMBus data line high after the eighth data bit is sent.

TABLE 6-10: BLOCK READ PROTOCOL – I²C VERSION (DEFAULT)

START	Client Address	WR	ACK	Register Address	ACK	START	Client Address	RD	ACK	Register Data
1 → 0	YYYY_YYY	0	0	XXh	0	1 → 0	YYYY_YYY	1	0	XXh
ACK	**Register Data**	**ACK**	**Register Data**	**ACK**	**Register Data**	**ACK**		**Register Data**	**NACK**	**STOP**
0	XXh	0	XXh	0	XXh	0		XXh	1	0 → 1

6.6.9 BLOCK READ – SMBUS VERSION

The PAC1951/2/3/4 can also support the SMBus version of Block Read. If the Byte Count bit is set, Block Read results in the device sending the Byte Count data before the first data byte. This protocol is shown in Table 6-11.

TABLE 6-11: BLOCK READ PROTOCOL – SMBUS VERSION (MUST SET BYTE COUNT BIT)

START	Client Address	WR	ACK	Register Address	ACK	START	Client Address	RD	ACK	Byte Count
1 → 0	YYYY_YYY	0	0	XXh	0	1 → 0	YYYY_YYY	1	0	XXh = N
ACK	**Register Data**	**ACK**	**Register Data**	**ACK**	**Register Data**	**ACK**		**Register Data**	**NACK**	**STOP**
0	XXh	0	XXh	0	XXh	0		XXh	1	0 → 1

© 2021-2025 Microchip Technology Inc. and its subsidiaries

7.0 REGISTERS DESCRIPTION

TABLE 7-1: REGISTER SET IN HEXADECIMAL ORDER

Register Name	Description	Type	Bytes	POR Value
REFRESH (Address 00h) Register	Send Byte for REFRESH command	SEND	0	N/A
CTRL (ADDRESS 01H) Register	Configures sampling modes and $\overline{\text{ALERT}}$ pins	R/W	2	0700h (**Note 2**)
ACC_COUNT (02H) Register	Accumulator count for all channels	Block Read	4	**Note 1**
VACCN (03H-06H) Register	Accumulator output for Channel 1	Block Read	7	**Note 1**
	Accumulator output for Channel 2	Block Read	7	**Note 1**
	Accumulator output for Channel 3	Block Read	7	**Note 1**
	Accumulator output for Channel 4	Block Read	7	**Note 1**
VBUSN (07H-0AH) Register	V_{BUS} measurement for Channel 1	Block Read	2	**Note 1**
	V_{BUS} measurement for Channel 2	Block Read	2	**Note 1**
	V_{BUS} measurement for Channel 3	Block Read	2	**Note 1**
	V_{BUS} measurement for Channel 4	Block Read	2	**Note 1**
VSENSEN (0BH-0EH) Register	V_{SENSE} measurement for Channel 1	Block Read	2	**Note 1**
	V_{SENSE} measurement for Channel 2	Block Read	2	**Note 1**
	V_{SENSE} measurement for Channel 3	Block Read	2	**Note 1**
	V_{SENSE} measurement for Channel 4	Block Read	2	**Note 1**
VBUSN_AVG (0FH-12H) Register	Rolling average of the eight most recent V_{BUS1} measurements	Block Read	2	**Note 1**
	Rolling average of the eight most recent V_{BUS2} measurements	Block Read	2	**Note 1**
	Rolling average of the eight most recent V_{BUS3} measurements	Block Read	2	**Note 1**
	Rolling average of the eight most recent V_{BUS4} measurements	Block Read	2	**Note 1**

Note 1: All the results registers, 03H-1Ah, have a POR value that is all zeros: 2 bytes → 0000h; 3 bytes → 000000h; 4 bytes → 00000000h; 7 bytes → 00000000000000h.

2: Register 01h has different default values for different devices, see Register 7-2.

3: Register FDh has different values depending on which member of the product family is selected. See Register 7-37.

© 2021-2025 Microchip Technology Inc. and its subsidiaries

TABLE 7-1: REGISTER SET IN HEXADECIMAL ORDER (CONTINUED)

Register Name	Description	Type	Bytes	POR Value
VSENSEN_AVG (13H-16H) Register	Rolling average of the eight most recent V_{SENSE1} measurements	Block Read	2	**Note 1**
	Rolling average of the eight most recent V_{SENSE2} measurements	Block Read	2	**Note 1**
	Rolling average of the eight most recent V_{SENSE3} measurements	Block Read	2	**Note 1**
	Rolling average of the eight most recent V_{SENSE4} measurements	Block Read	2	**Note 1**
VPOWERN (17H-1AH) Register	V_{SENSE} x V_{BUS} for Channel 1	Block Read	4	**Note 1**
	V_{SENSE} x V_{BUS} for Channel 2	Block Read	4	**Note 1**
	V_{SENSE} x V_{BUS} for Channel 3	Block Read	4	**Note 1**
	V_{SENSE} x V_{BUS} for Channel 4	Block Read	4	**Note 1**
SMBUS SETTINGS (1CH) Register	Activate SMBus functionality, I/O data for R/W on I/O pins	R/W	1	10h
NEG_PWR_FSR (1DH) Register	Configuration control for bidirectional current	R/W	2	0000h
REFRESH_G (1EH) Register	REFRESH response to General Call Address	SEND	0	N/A
REFRESH_V (1FH) Register	Refreshes $V_{BUS\ and}$ V_{SENSE} data only, no accumulator reset	SEND	0	N/A
SLOW (20H) Register	Status and control for SLOW pin functions	R/W	1	00h
CTRL_ACT (21H) Register	Currently active value of 01h	R	2	0700h
NEG_PWR_FSR_ACT (22H) Register	Currently active value of NEG_PWR	R	2	0000h
CTRL_LAT (23H) Register	Latched active value of 01h	R	2	0700h
NEG_PWR_FSR _LAT (24H) Register	Latched active value of NEG_PWR	R	2	0000h
ACCUM CONFIG (25H) Register	Enable V_{SENSE} and V_{BUS} accumulation	R/W	1	00h
ALERT STATUS (26H) Register	Reads to see what triggered ALERT	RC	3	000000h
SLOW_ALERT1 (27H) Register	Assigns specific ALERT to $\overline{\text{ALERTn}}$/SLOW	RW	3	000000h
GPIO_ALERT2 (28H) Register	Assigns specific ALERT to $\overline{\text{ALERTn}}$/I/O	R/W	3	000000h
ACC FULLNESS LIMITS (29H) Register	ACC and ACC Count Fullness limits	R/W	2	5540h
OC LIMITN (30H-33H) Register	OC limit for Channel 1	R/W	2	0000h
	OC limit for Channel 2	R/W	2	0000h
	OC limit for Channel 3	R/W	2	0000h
	OC limit for Channel 4	R/W	2	0000h

Note 1: All the results registers, 03H-1Ah, have a POR value that is all zeros: 2 bytes → 0000h; 3 bytes → 000000h; 4 bytes → 00000000h; 7 bytes → 00000000000000h.

2: Register 01h has different default values for different devices, see Register 7-2.

3: Register FDh has different values depending on which member of the product family is selected. See Register 7-37.

© 2021-2025 Microchip Technology Inc. and its subsidiaries

TABLE 7-1: REGISTER SET IN HEXADECIMAL ORDER (CONTINUED)

Register Name	Description	Type	Bytes	POR Value
UC LIMITN (34H-37H) Register	UC limit for Channel 1	R/W	2	0000h
	UC limit for Channel 2	R/W	2	0000h
	UC limit for Channel 3	R/W	2	0000h
	UC limit for Channel 4	R/W	2	0000h
OP LIMITN (38H-3BH) Register	OP limit for Channel 1	R/W	3	000000h
	OP limit for Channel 2	R/W	3	000000h
	OP limit for Channel 3	R/W	3	000000h
	OP limit for Channel 4	R/W	3	000000h
OV LIMITN (3CH-3FH) Register	OV limit for Channel 1	R/W	2	0000h
	OV limit for Channel 2	R/W	2	0000h
	OV limit for Channel 3	R/W	2	0000h
	OV limit for Channel 4	R/W	2	0000h
UV LIMITN (40H-43H) Register	UV limit for Channel 1	R/W	2	0000h
	UV limit for Channel 2	R/W	2	0000h
	UV limit for Channel 3	R/W	2	0000h
	UV limit for Channel 4	R/W	2	0000h
OC LIMIT NSAMPLES (44H) Register	Consecutive OC samples over threshold for ALERT	R/W	1	00h
UC LIMIT NSAMPLES (45H) Register	Consecutive UC samples over threshold for ALERT	R/W	1	00h
OP LIMIT NSAMPLES (46H) Register	Consecutive OP samples over threshold for ALERT	R/W	1	00h
OV LIMIT NSAMPLES (47H) Register	Consecutive OV samples over threshold for ALERT	R/W	1	00h
UV LIMIT NSAMPLES (48H) Register	Consecutive UV samples over threshold for ALERT	R/W	1	00h
ALERT ENABLE (49H) Register	ALERT Enable	R/W	3	000000h
ACCUM CONFIG ACT (4AH) Register	Currently active value of 25h	R	1	00h
ACCUM CONFIG LAT (4BH) Register	Latched active value of 25h	R	1	00h
PRODUCT ID (FDH) Register	Stores the Product ID	R	1	**Note 3**
MANUFACTURER ID (FEH) REGISTER	Stores the Manufacturer ID	R	1	54h
REVISION ID (FFH) Register	Stores the revision	R	1	02h

Note 1: All the results registers, 03H-1Ah, have a POR value that is all zeros: 2 bytes → 0000h; 3 bytes → 000000h; 4 bytes → 00000000h; 7 bytes → 00000000000000h.

2: Register 01h has different default values for different devices, see Register 7-2.

3: Register FDh has different values depending on which member of the product family is selected. See Register 7-37.

© 2021-2025 Microchip Technology Inc. and its subsidiaries

7.1 Reading Data Bytes

Data represented by the data registers are ensured to be synchronized and stable for 1 ms after any of the REFRESH commands are sent. Immediately after the REFRESH commands are sent, the data bytes change dynamically until 1 ms elapses.

When new data are written to a control register and the host reads it back, the new data are read back even if no REFRESH command is sent to cause the new data to take effect.

Note:	The letter N or n is used to represent 1, 2, 3, 4 in the register and bit names below, in sections that describe registers that are grouped for all four channels.

REGISTER 7-1: REFRESH (ADDRESS 00H) REGISTER

SEND	
No Data in this command, Send Byte only	
bit 7	bit 0

Legend:			
R = Readable bit	W = Writable bit	U = Unimplemented bit, read as '0'	
-n = Value at POR	'1' = Bit is set	'0' = Bit is cleared	x = Bit is unknown

bit 7-0 This command is a Send byte, it does not contain any data. When it is sent to the device, the REFRESH command is executed. The accumulator data, accumulator count, V_{BUS} and V_{SENSE} measurements are all refreshed and the accumulators are reset. The host can read the accumulator data and accumulator count 1 ms after the REFRESH command is sent and anytime after, up until the next REFRESH command is sent. The host can read V_{BUS} and V_{SENSE} data in the same time period. The accumulator results, accumulator count, V_{BUS} and V_{SENSE} data can be refreshed with the REFRESH_V command without resetting the accumulators. See **Section 5.2, "REFRESH Command"**.

© 2021-2025 Microchip Technology Inc. and its subsidiaries

REGISTER 7-2: CTRL (ADDRESS 01H) REGISTER

R/W-0	R/W-0	R/W-0	R/W-0	R/W-0	R/W-1	R/W-1	R/W-1
SAMPLE_MODE[3:0]				GPIO_ALERT2[1:0]		SLOW_ALERT1[1:0]	
bit 15							bit 8

R/W-0	R/W-0	R/W-0	R/W-0	U-0	U-0	U-0	U-0
CHANNEL_N_OFF[3:0]				—	—	—	—
bit 7							bit 0

Legend:			
R = Readable bit	W = Writable bit	U = Unimplemented bit, read as '0'	
-n = Value at POR	'1' = Bit is set	'0' = Bit is cleared	x = Bit is unknown

bit 15-12 **SAMPLE_MODE[3:0]**: These bits select one of the sampling modes listed below. These modes are exclusive – that is, only one mode can be set at any given time. One of the sampling modes is Sleep, when no sampling occurs.

0b0000 = 1024 sps adaptive accumulation (default), see **Section 5.13.1, "Adaptive Accumulator"**
0b0001 = 256 sps adaptive accumulation
0b0010 = 64 sps adaptive accumulation
0b0011 = 8 sps adaptive accumulation
0b0100 = 1024 sps, see **Section 5.15, "Conversion Cycle Controls"**
0b0101 = 256 sps
0b0110 = 64 sps
0b0111 = 8 sps
0b1000 = Single-Shot mode, see **Section 5.15.4, "Single-Shot Mode"**
0b1001 = Single-Shot 8X
0b1010 = Fast mode, see **Section 5.15.3, "Fast Mode"**
0b1011 = Burst mode, see **Section 5.15.2, "Burst Mode"**
0b1100 = Reserved
0b1101 = Reserved
0b1110 = Reserved
0b1111 = Sleep, see **Section 5.5, "Sleep State"**

bit 11-10 **GPIO_ALERT2[1:0]**: Select the signals for the GPIO/$\overline{\text{ALERT2}}$ pin. If the pin is configured as a GPIO pin, the R/W data for the pin are stored in Register 7-10.

00 = ALERT functions as an $\overline{\text{ALERT}}$ pin
01 = GPIO digital input. Read the digital value input to this pin from Register 7-10. Default for this pin.
10 = GPIO digital output. Write the digital value to be output from this pin to Register 7-10.
11 = The pin functions as the SLOW pin, taking the pin high overrides the programmed sample rate and yields a sampling rate of 8 sps. Only one pin can be selected to set the SLOW functionality. If both GPIO/$\overline{\text{ALERT2}}$ and SLOW/$\overline{\text{ALERT1}}$ pins are set to SLOW, the SLOW/$\overline{\text{ALERT1}}$ pin controls the SLOW functionality.

bit 9-8 **SLOW_ALERT1[1:0]**: Select the signals for SLOW/$\overline{\text{ALERT1}}$ pin. If the pin is configured as a GPIO pin, the R/W data for the pin are stored in Register 7-10.

00 = ALERT functions as an $\overline{\text{ALERT1}}$ pin
01 = GPIO digital input. Read the digital value input to this pin from Register 7-10.
10 = GPIO digital output. Write the digital value to be output from this pin to Register 7-10.
11 = SLOW functions as the SLOW pin, taking the pin high overrides the programmed sample rate and yields a sampling rate of 8 sps (default for this pin).

© 2021-2025 Microchip Technology Inc. and its subsidiaries

REGISTER 7-2: CTRL (ADDRESS 01H) REGISTER (CONTINUED)

bit 7-4 **CHANNEL_N_OFF[3:0]**:

Allow one or more channels to be disabled (bit value = 1) during the conversion cycle. A bit value = 0 means the channel is active. These settings apply for normal continuous round-robin conversion cycles or Single-Shot mode, if Single-Shot mode is selected. If a channel is set to inactive, the auto-incrementing address pointer skips addresses associated with that channel unless the No Skip bit 1 in Register 7-10 is set.

Channel 1: bit 3

Channel 2: bit 2

Channel 3: bit 1

Channel 4: bit 0

Example: Channel 2 disabled, Channel 1, 3 and 4 enabled. CHANNEL_N_OFF = 0b0100.

In PAC1951/2/3/4 devices, deactivating channels allows faster sampling. Burst or Fast modes are selected using bits [15:12] in this register.

PAC1954-1 default = 0b0000 (register default 0700h) (shown above)

PAC1953-1 default = 0b0001 (register value 0710h)

PAC1952-1 default = 0b0011 (register value 0730h)

PAC1952-2 default = 0b0011 (register value 0730h)

PAC1951-1 default = 0b0111 (register value 0770h)

PAC1951-2 default = 0b0111 (register value 0770h)

bit 3-0 Unimplemented, read as '0'.

REGISTER 7-3: ACC_COUNT (02H) REGISTER

R/W-0	R/W-0	R/W-0	R/W-0	R/W-0	R/W-0	R/W-0	R/W-0
ACC_COUNT[31:24]							
bit 31							bit 24

R/W-0	R/W-0	R/W-0	R/W-0	R/W-0	R/W-0	R/W-0	R/W-0
ACC_COUNT[23:16]							
bit 23							bit 16

R/W-0	R/W-0	R/W-0	R/W-0	R/W-0	R/W-0	R/W-0	R/W-0
ACC_COUNT[15:8]							
bit 15							bit 8

R/W-0	R/W-0	R/W-0	R/W-0	R/W-0	R/W-0	R/W-0	R/W-0
ACC_COUNT[7:0]							
bit 7							bit 0

Legend:			
R = Readable bit	W = Writable bit	U = Unimplemented bit, read as '0'	
-n = Value at POR	'1' = Bit is set	'0' = Bit is cleared	x = Bit is unknown

bit 31-0 **ACC_COUNT[31:0]**: This register contains the count for each time a power result is summed in the accumulator.

© 2021-2025 Microchip Technology Inc. and its subsidiaries

REGISTER 7-4: VACCN (03H-06H) REGISTER

R-0	R-0	R-0	R-0	R-0	R-0	R-0	R-0
VACCn[55:48]							
bit 55							bit 48

R-0	R-0	R-0	R-0	R-0	R-0	R-0	R-0
VACCn[47:40]							
bit 47							bit 40

R-0	R-0	R-0	R-0	R-0	R-0	R-0	R-0
VACCn[39:32]							
bit 39							bit 32

R-0	R-0	R-0	R-0	R-0	R-0	R-0	R-0
VACCn[31:24]							
bit 31							bit 24

R-0	R-0	R-0	R-0	R-0	R-0	R-0	R-0
VACCn[23:16]							
bit 23							bit 16

R-0	R-0	R-0	R-0	R-0	R-0	R-0	R-0
VACCn[15:8]							
bit 15							bit 8

R-0	R-0	R-0	R-0	R-0	R-0	R-0	R-0
VACCn[7:0]							
bit 7							bit 0

Legend:			
R = Readable bit	W = Writable bit	U = Unimplemented bit, read as '0'	
-n = Value at POR	'1' = Bit is set	'0' = Bit is cleared	x = Bit is unknown

bit 55-0 **VACCn[55:0]**: This register contains the accumulated sum of V_{POWER} samples, where n = 1 to 4, depending on the device by default. It can also hold the accumulated values of V_{SENSE} and V_{BUS} if bits are set in Register 7-19. These are 56-bit unsigned numbers, unless either V_{BUS} or V_{SENSE} is configured to have a bipolar range. In that case, they are 55 bits + sign (two's complement) numbers. Power is always calculated using signed numbers for V_{BUS} and V_{SENSE}, but if both V_{BUS} and V_{SENSE} are in the default Unipolar mode, power is reported as an unsigned number. This can lead to very small discrepancies between a manual comparison of the product of V_{BUS} and V_{SENSE} and the results that the chip calculates and accumulates for V_{POWER}. The digital math in the chip uses more bits than the reported results for V_{BUS} and V_{SENSE}, so the results registers for V_{POWER} and the accumulated power have in some cases a more accurate number than the result provided by calculations using the results registers for V_{SENSE} and V_{POWER}.

REGISTER 7-5: VBUSN (07H-0AH) REGISTER

R-0	R-0	R-0	R-0	R-0	R-0	R-0	R-0
VBUSn[15:8]							
bit 15							bit 8

R-0	R-0	R-0	R-0	R-0	R-0	R-0	R-0
VBUSn[7:0]							
bit 7							bit 0

Legend:			
R = Readable bit	W = Writable bit	U = Unimplemented bit, read as '0'	
-n = Value at POR	'1' = Bit is set	'0' = Bit is cleared	x = Bit is unknown

bit 15-0 **VBUSn[15:0]**: This register contains the most recent digitized value of a V_{BUS} sample, where n = 1 to 4, depending on the device. These are 16-bit unsigned numbers, unless V_{BUS} is configured to have a bipolar range. In that case, they are 15 bits + sign (two's complement) numbers.

REGISTER 7-6: VSENSEN (0BH-0EH) REGISTER

R-0	R-0	R-0	R-0	R-0	R-0	R-0	R-0
VSENSEn[15:8]							
bit 15							bit 8

R-0	R-0	R-0	R-0	R-0	R-0	R-0	R-0
VSENSEn[7:0]							
bit 7							bit 0

Legend:			
R = Readable bit	W = Writable bit	U = Unimplemented bit, read as '0'	
-n = Value at POR	'1' = Bit is set	'0' = Bit is cleared	x = Bit is unknown

bit 15-0 **VSENSEn[15:0]**: This register contains the most recent digitized value of V_{SENSE} samples, where n = 1 to 4, depending on the device. These are 16-bit unsigned numbers, unless V_{SENSE} is configured to have a bipolar range. In that case, they are 15 bits + sign (two's complement) numbers.

© 2021-2025 Microchip Technology Inc. and its subsidiaries

REGISTER 7-7: VBUSN_AVG (0FH-12H) REGISTER

R-0	R-0	R-0	R-0	R-0	R-0	R-0	R-0
VBUSn_AVG[15:8]							
bit 15							bit 8

R-0	R-0	R-0	R-0	R-0	R-0	R-0	R-0
VBUSn_AVG[7:0]							
bit 7							bit 0

Legend:			
R = Readable bit	W = Writable bit	U = Unimplemented bit, read as '0'	
-n = Value at POR	'1' = Bit is set	'0' = Bit is cleared	x = Bit is unknown

bit 15-0 **VBUSn_AVG[15:0]**: This register contain a rolling average of the eight most recent V_{BUS} measurements. It has the same format as the values in the V_{BUS} registers.

REGISTER 7-8: VSENSEN_AVG (13H-16H) REGISTER

R-0	R-0	R-0	R-0	R-0	R-0	R-0	R-0
VSENSEn_AVG[15:8]							
bit 15							bit 8

R-0	R-0	R-0	R-0	R-0	R-0	R-0	R-0
VSENSEn_AVG[7:0]							
bit 7							bit 0

Legend:			
R = Readable bit	W = Writable bit	U = Unimplemented bit, read as '0'	
-n = Value at POR	'1' = Bit is set	'0' = Bit is cleared	x = Bit is unknown

bit 15-0 **VSENSEn_AVG[15:0]**: This register contains a rolling average of the eight most recent V_{SENSE} results. It has the same format as the values in the V_{SENSE} registers.

REGISTER 7-9: VPOWERN (17H-1AH) REGISTER

R-0	R-0	R-0	R-0	R-0	R-0	R-0	R-0
VPOWERn[29:22]							
bit 31							bit 24

R-0	R-0	R-0	R-0	R-0	R-0	R-0	R-0
VPOWERn[21:14]							
bit 23							bit 16

R-0	R-0	R-0	R-0	R-0	R-0	R-0	R-0
VPOWERn[13:6]							
bit 15							bit 8

R-0	R-0	R-0	R-0	R-0	R-0	U-0	U-0
VPOWERn[5:0]						—	—
bit 7							bit 0

Legend:			
R = Readable bit	W = Writable bit	U = Unimplemented bit, read as '0'	
-n = Value at POR	'1' = Bit is set	'0' = Bit is cleared	x = Bit is unknown

bit 31-2 **VPOWERn[29-0]**: This register contains the product of V_{BUS} (14 MSBs) and V_{SENSE}, which represents the proportional power for each channel. These are 30-bit unsigned numbers unless either V_{BUS} or V_{SENSE} is configured to have a bipolar range. In that case, they are 29 bits + sign (two's complement) numbers. These are the numbers that are accumulated in the accumulators. Power is always calculated using signed numbers for V_{BUS} and V_{SENSE}, but if both V_{BUS} and V_{SENSE} are in the default Unipolar mode, power is reported as an unsigned number. This can lead to very small discrepancies between a manual comparison of the product of V_{BUS} and V_{SENSE} and the results that the chip calculates for V_{POWER}. The digital math in the chip uses more bits than the reported results for V_{BUS} and V_{SENSE}, so the results registers for V_{POWER} and the accumulated power have in some cases a more accurate number than the result provided by calculations using the results registers for V_{SENSE} and V_{POWER}.

bit 1-0 Unimplemented, read as '0'.

© 2021-2025 Microchip Technology Inc. and its subsidiaries

REGISTER 7-10: SMBUS SETTINGS (1CH) REGISTER

R/W-0	R/W-0	R/W-0	R/W-1	R/W-0	R/W-0	R/W-0	R/W-0
GPIO_ DATA2	GPIO_ DATA1	ANY_ALERT	POR	TIMEOUT	BYTE COUNT	NO SKIP	I2C_ HISPEED
bit 7							bit 0

Legend:			
R = Readable bit	W = Writable bit	U = Unimplemented bit, read as '0'	
-n = Value at POR	'1' = Bit is set	'0' = Bit is cleared	x = Bit is unknown

Bits in this register may be written or read at any time and are active immediately. Refresh is not required to activate them or update them.

bit 7 **GPIO_DATA2**: R/W data for the pin GPIO/$\overline{\text{ALERT2}}$ if the pin is configured as a GPIO pin. See Register 7-2 to configure GPIO/$\overline{\text{ALERT2}}$ as a GPIO pin.
0 = Pull the GPIO pin low when configured to be an output (default)
1 = GPIO pin pulled to external V_{IO} via an external resistor when configured to be an output

bit 6 **GPIO_DATA1**: R/W data for the pin SLOW/$\overline{\text{ALERT1}}$ if the pin is configured as a GPIO pin. See Register 7-2 to configure SLOW/$\overline{\text{ALERT1}}$ as a GPIO pin.
0 = Pull the GPIO pin low when configured to be an output (default)
1 = GPIO pin pulled to external V_{IO} via an external resistor when configured to be an output

bit 5 **ANY_ALERT**: This bit is set by any of the active ALERT functions being triggered, except ALERT_CC. This bit is cleared when the ALERT function that set the bit is cleared. See **Section 5.16.2, "ALERT Pin Assignments"**.
0 = No ALERT condition has occurred (default)
1 = An ALERT condition has occurred, read Register 7-20 for cause

bit 4 **POR**: The POR bit is for the purpose of enabling the system designer to learn if the chip is reset after it is programed. The user can clear this bit after POR and then monitor it to detect if the device was powered cycled or somehow reset since the POR. If the reset is detected in this manner, any non-default programming can be reprogrammed. This bit is only reset by the internal POR, which can occur from power cycling or the $\overline{\text{PWRDN}}$ pin going low.
0 = This bit has been cleared over I^2C since the last POR occurred
1 = Default. This bit has the POR default value of '1' and has not been cleared since the last reset occurred

bit 3 **TIMEOUT** enable bit. The SMBus time-out is disabled by default and is enabled by setting this bit.
0 = No SMBus time-out feature (default)
1 = SMBus time-out feature is available

bit 2 **BYTE COUNT**: This bit causes Byte Count data to be included in the response to the SMBus Block Read command for each register read. This functionality is disabled by default and Block Read corresponds to the I^2C protocol.
0 = No Byte Count in response to a Block Read command (default)
1 = Data in response to a Block Read command include the Byte Count data

bit 1 **NO SKIP**: This bit controls the auto-incrementing of the address pointer for channels that are inactive.
0 = The auto-incrementing pointer skips over addresses used by/for channels that are inactive (default)
1 = The auto-incrementing pointer does not skip over addresses used by/for channels that are inactive. When these channels are disabled, if a read is performed, it reads FF.

bit 0 **I2C_HISPEED:** Setting this bit enables the 3.4 MHz I^2C operation by changing the pulse-width parameters of the Pulse Gobbler. Default = 0.

© 2021-2025 Microchip Technology Inc. and its subsidiaries

REGISTER 7-11: NEG_PWR_FSR (1DH) REGISTER

R/W-0	R/W-0	R/W-0	R/W-0	R/W-0	R/W-0	R/W-0	R/W-0
CFG_VS1[1:0]		CFG_VS2[1:0]		CFG_VS3[1:0]		CFG_VS4[1:0]	
bit 15							bit 8

R/W-0	R/W-0	R/W-0	R/W-0	R/W-0	R/W-0	R/W-0	R/W-0
CFG_VB1[1:0]		CFG_VB2[1:0]		CFG_VB3[1:0]		CFG_VB4[1:0]	
bit 7							bit 0

Legend:			
R = Readable bit	W = Writable bit	U = Unimplemented bit, read as '0'	
-n = Value at POR	'1' = Bit is set	'0' = Bit is cleared	x = Bit is unknown

bit 15-14 **CFG_VS1[1:0]**: Configure Channel 1 FSR for V_{SENSE} measurements
00 = Channel 1 V_{SENSE} has unipolar +100 mV to 0V FSR (default)
01 = Channel 1 V_{SENSE} has bipolar +100 mV to -100 mV FSR
10 = Channel 1 V_{SENSE} has bipolar +50 mV to -50 mV FSR
11 = Reserved

bit 13-12 **CFG_VS2[1:0]**: Configure Channel 2 FSR for V_{SENSE} measurements
00 = Channel 2 V_{SENSE} has unipolar +100 mV to 0V FSR (default)
01 = Channel 2 V_{SENSE} has bipolar +100 mV to -100 mV FSR
10 = Channel 2 V_{SENSE} has bipolar +50 mV to -50 mV FSR
11 = Reserved

bit 11-10 **CFG_VS3[1:0]**: Configure Channel 3 FSR for V_{SENSE} measurements
00 = Channel 3 V_{SENSE} has unipolar +100 mV to 0V FSR (default)
01 = Channel 3 V_{SENSE} has bipolar +100 mV to -100 mV FSR
10 = Channel 3 V_{SENSE} has bipolar +50 mV to -50 mV FSR
11 = Reserved

bit 9-8 **CFG_VS4[1:0]**: Configure Channel 4 FSR for V_{SENSE} measurements
00 = Channel 4 V_{SENSE} has unipolar +100 mV to 0V FSR (default)
01 = Channel 4 V_{SENSE} has bipolar +100 mV to -100 mV FSR
10 = Channel 4 V_{SENSE} has bipolar +50 mV to -50 mV FSR
11 = Reserved

bit 7-6 **CFG_VB1[1:0]**: Configure Channel 1 FSR for V_{BUS} measurements
00 = Channel 1 V_{BUS} has unipolar +32V to 0V FSR (default)
01 = Channel 1 V_{BUS} has bipolar +32V to -32V FSR
10 = Channel 1 V_{BUS} has bipolar +16V to -16V FSR
11 = Reserved

bit 5-4 **CFG_VB2[1:0]**: Configure Channel 2 FSR for V_{BUS} measurements
00 = Channel 2 V_{BUS} has unipolar +32V to 0V FSR (default)
01 = Channel 2 V_{BUS} has bipolar +32V to -32V FSR
10 = Channel 2 V_{BUS} has bipolar +16V to -16V FSR
11 = Reserved

bit 3-2 **CFG_VB3[1:0]**: Configure Channel 3 FSR for V_{BUS} measurements
00 = Channel 3 V_{BUS} has unipolar +32V to 0V FSR (default)
01 = Channel 3 V_{BUS} has bipolar +32V to -32V FSR
10 = Channel 3 V_{BUS} has bipolar +16V to -16V FSR
11 = Reserved

bit 1-0 **CFG_VB4[1:0]**: Configure Channel 4 FSR for V_{BUS} measurements
00 = Channel 4 V_{BUS} has unipolar +32V to 0V FSR (default)
01 = Channel 4 V_{BUS} has bipolar +32V to -32V FSR
10 = Channel 4 V_{BUS} has bipolar +16V to -16V FSR
11 = Reserved

© 2021-2025 Microchip Technology Inc. and its subsidiaries

REGISTER 7-12: REFRESH_G (1EH) REGISTER

SEND	
No Data in this command, Send Byte only	
bit 7	bit 0

Legend:			
R = Readable bit	W = Writable bit	U = Unimplemented bit, read as '0'	
-n = Value at POR	'1' = Bit is set	'0' = Bit is cleared	x = Bit is unknown

bit 7-0 This command is a Send Byte, it does not contain any data. It is exactly like the REFRESH command, but it is intended for use with the General Call command. When it is sent to the device, the REFRESH_G command is executed and the readable accumulator data, readable accumulator count, V_{BUS} and V_{SENSE} measurements are all refreshed and the internal accumulator values or accumulator count are reset, exactly like the REFRESH command. The host can read the updated data 1 ms after the REFRESH_G command is sent and anytime after, up until the next REFRESH, REFRESH_G or REFRESH_V command is sent.

REGISTER 7-13: REFRESH_V (1FH) REGISTER

SEND	
No Data in this command, Send Byte only	
bit 7	bit 0

Legend:			
R = Readable bit	W = Writable bit	U = Unimplemented bit, read as '0'	
-n = Value at POR	'1' = Bit is set	'0' = Bit is cleared	x = Bit is unknown

bit 7-0 This command is a Send Byte, it does not contain any data. When it is sent to the device, the REFRESH_V command is executed. It is similar to the REFRESH command except the accumulators and accumulator count are not reset. The readable accumulator data, readable accumulator count, V_{BUS} and V_{SENSE} measurements are all refreshed without affecting the internal accumulators values or accumulator count. The host can read the updated data 1 ms after the REFRESH_V command is sent and anytime after, up until the next REFRESH, REFRESH_G or REFRESH_V command is sent.

© 2021-2025 Microchip Technology Inc. and its subsidiaries

REGISTER 7-14: SLOW (20H) REGISTER

R-0	R-0	R-0	R/W-0	R/W-0	R/W-0	R/W-0	U-0
SLOW	SLOW_LH	SLOW_HL	R_RISE	R_V_RISE	R_FALL	R_V_FALL	—
bit 7							bit 0

Legend:			
R = Readable bit	W = Writable bit	U = Unimplemented bit, read as '0'	
-n = Value at POR	'1' = Bit is set	'0' = Bit is cleared	x = Bit is unknown

This register tracks the state of the SLOW pin, tracks transitions on the SLOW pin and controls the type of limited REFRESH command (if any) that occurs on a SLOW pin transition. This allows software to monitor the state of the SLOW pin and its transitions over the I^2C even though the SLOW pin is asynchronous to the I^2C pins and may have a different controller. As such, no REFRESH or REFRESH_V command is required to activate new written values or to update readable values. On a transition of the SLOW pin, a limited REFRESH function may be executed if bits 1-4 are set. These limited REFRESH and REFRESH_V functions update all of the readable results registers. The limited REFRESH does not update the CTRL_LAT, NEG_PWR_FSR_LAT or the ACCUM_CONFIG_LAT registers. For the limited REFRESH function only, it also resets the accumulators and accumulator count. These are called limited REFRESH and limited REFRESH_V functions because there is no activation of any pending changes to the control registers. If limited REFRESH and limited REFRESH_V are both enabled for a certain SLOW pin transition, REFRESH is executed (REFRESH wins over REFRESH_V).

bit 7 **SLOW**:
0 = SLOW pin, the current status is not active
1 = SLOW pin, the current status is active

bit 6 **SLOW_LH**:
0 = The SLOW pin has not transitioned low to high since the last REFRESH command
1 = The SLOW pin has transitioned low to high since the last REFRESH command
The bit is reset to '0' by a REFRESH or REFRESH_G command.

bit 5 **SLOW_HL**:
0 = The SLOW pin has not transitioned high to low since the last REFRESH command
1 = The SLOW pin has transitioned high to low since the last REFRESH command
The bit is reset to '0' by a REFRESH or REFRESH_G command.

bit 4 **R_RISE**:
0 = Disables limited REFRESH function to take place on the rising edge of the SLOW pin
1 = Enables limited REFRESH function to take place on the rising edge of the SLOW pin
The bit is not reset automatically, it must be written to be changed.

bit 3 **R_V_RISE**:
0 = Disables limited REFRESH_V function to take place on the rising edge of the SLOW pin
1 = Enables limited REFRESH_V function to take place on the rising edge of the SLOW pin
The bit is not reset automatically, it must be written to be changed.

bit 2 **R_FALL**:
0 = Disables limited REFRESH function to take place on the falling edge of the SLOW pin
1 = Enables limited REFRESH function to take place on the falling edge of the SLOW pin
The bit is not reset automatically, it must be written to be changed.

bit 1 **R_V_FALL**:
0 = Disables limited REFRESH_V function to take place on the falling edge of the SLOW pin
1 = Enables limited REFRESH_V function to take place on the falling edge of the SLOW pin
The bit is not reset automatically, it must be written to be changed.

bit 0 Unimplemented, read as '0'.

© 2021-2025 Microchip Technology Inc. and its subsidiaries

REGISTER 7-15: CTRL_ACT (21H) REGISTER

R-0	R-0	R-0	R-0	R-0	R-1	R-1	R-1
SAMPLE_MODE[3:0]				GPIO_ALERT2[1:0]		SLOW_ALERT1[1:0]	
bit 15							bit 8

R-0	R-0	R-0	R-0	U-0	U-0	U-0	U-0
CHANNEL_N_OFF[3:0]				—	—	—	—
bit 7							bit 0

Legend:			
R = Readable bit	W = Writable bit	U = Unimplemented bit, read as '0'	
-n = Value at POR	'1' = Bit is set	'0' = Bit is cleared	x = Bit is unknown

This register contains an image of Register 7-2 and reflects the current active value of these settings, whereas the values in register 01h may be programmed but not activated by one of the REFRESH commands. This register allows software to determine the actual active settings. This register is valid when the results registers are valid, 1 ms after a REFRESH/_V/_G command, in most cases. However, if you program a conversion rate change followed by REFRESH, the new conversion rate does not become effective until the current conversion cycle is complete. This can cause a delay in some cases before the conversion cycle (and the CTRL_ACT register) is updated. This delay can be variable, depending on where you are in the conversion cycle when the REFRESH command is sent.

bit 15-12 **SAMPLE_MODE[3:0]**: These bits select one of the sampling modes listed below. These modes are exclusive – that is, only one mode can be set at any given time. One of the sampling modes is Sleep, when no sampling occurs.

0b0000 = 1024 sps adaptive accumulation (default), see **Section 5.13.1, "Adaptive Accumulator"**
0b0001 = 256 sps adaptive accumulation
0b0010 = 64 sps adaptive accumulation
0b0011 = 8 sps adaptive accumulation
0b0100 = 1024 sps, see **Section 5.15, "Conversion Cycle Controls"**
0b0101 = 256 sps
0b0110 = 64 sps
0b0111 = 8 sps
0b1000 = Single-Shot mode, see **Section 5.15.4, "Single-Shot Mode"**
0b1001 = Single-Shot 8X
0b1010 = Fast mode, see **Section 5.15.3, "Fast Mode"**
0b1011 = Burst mode, see **Section 5.15.2, "Burst Mode"**
0b1100 = Reserved
0b1101 = Reserved
0b1110 = Reserved
0b1111 = Sleep, see **Section 5.5, "Sleep State"**

bit 11-10 **GPIO_ALERT2[1:0]**: Select the signals for the GPIO/$\overline{\text{ALERT2}}$ pin. If the pin is configured as a GPIO pin, the R/W data for the pin are stored in Register 7-10.

00 = ALERT functions as an $\overline{\text{ALERT}}$ pin
01 = GPIO digital input. Read the digital value input to this pin from Register 7-10. Default for this pin.
10 = GPIO digital output. Write the digital value to be output from this pin to Register 7-10.
11 = The pin functions as the SLOW pin, taking the pin high overrides the programmed sample rate and yields a sampling rate of 8 sps.

REGISTER 7-15: CTRL_ACT (21H) REGISTER (CONTINUED)

bit 9-8 **SLOW_ALERT1[1:0]**: Select the signals for SLOW/$\overline{\text{ALERT1}}$ pin. If the pin is configured as a GPIO pin, the R/W data for the pin are stored in Register 7-10.
00 = ALERT functions as an $\overline{\text{ALERT1}}$ pin
01 = GPIO digital input. Read the digital value input to this pin from Register 7-10.
10 = GPIO digital output. Write the digital value to be output from this pin to Register 7-10.
11 = SLOW functions as the SLOW pin, taking the pin high overrides the programmed sample rate and yields a sampling rate of 8 sps (default for this pin).

bit 7-4 **CHANNEL_N_OFF[3:0]**:
Allow one or more channels to be inactive during the conversion cycle. These settings apply for normal continuous round-robin conversion cycles or Single-Shot mode, if Single-Shot mode is selected. If a channel is set to inactive, the auto-incrementing address pointer skips addresses associated with that channel unless the pointer skipping bit 1 in this register is set.
In PAC1951/2/3/4 devices, deactivating channels allows faster sampling. Burst or Fast modes are selected using bits [15:12] in this register.
PAC1954-1 default = 0b0000 (register default 0700h) (shown above)
PAC1953-1 default = 0b0001 (register value 0710h)
PAC1952-1 default = 0b0011 (register value 0730h)
PAC1952-2 default = 0b0011 (register value 0730h)
PAC1951-1 default = 0b0111 (register value 0770h)
PAC1951-2 default = 0b0111 (register value 0770h)

bit 3-0 Unimplemented, read as '0'.

REGISTER 7-16: NEG_PWR_FSR_ACT (22H) REGISTER

R/W-0	R/W-0	R/W-0	R/W-0	R/W-0	R/W-0	R/W-0	R/W-0
CFG_VS1[1:0]		CFG_VS2[1:0]		CFG_VS3[1:0]		CFG_VS4[1:0]	
bit 15							bit 8

R/W-0	R/W-0	R/W-0	R/W-0	R/W-0	R/W-0	R/W-0	R/W-0
CFG_VB1[1:0]		CFG_VB2[1:0]		CFG_VB3[1:0]		CFG_VB4[1:0]	
bit 7							bit 0

Legend:			
R = Readable bit	W = Writable bit	U = Unimplemented bit, read as '0'	
-n = Value at POR	'1' = Bit is set	'0' = Bit is cleared	x = Bit is unknown

This register contains an image of Register 7-11. The bits in this register reflect the current active value of these settings, whereas the values in register 1Dh may be programmed but not activated by one of the REFRESH commands. This register allows software to determine the actual active setting. This register is valid when the results registers are valid, 1 ms after a REFRESH/_V/_G command.

bit 15-14 **CFG_VS1[1:0]**: Configure Channel 1 FSR for V_{SENSE} measurements
00 = Channel 1 V_{SENSE} has unipolar +100 mV to 0V FSR (default)
01 = Channel 1 V_{SENSE} has bipolar +100 mV to -100 mV FSR
10 = Channel 1 V_{SENSE} has bipolar +50 mV to -50 mV FSR
11 = Reserved

bit 13-12 **CFG_VS2[1:0]**: Configure Channel 2 FSR for V_{SENSE} measurements
00 = Channel 2 V_{SENSE} has unipolar +100 mV to 0V FSR (default)
01 = Channel 2 V_{SENSE} has bipolar +100 mV to -100 mV FSR
10 = Channel 2 V_{SENSE} has bipolar +50 mV to -50 mV FSR
11 = Reserved

© 2021-2025 Microchip Technology Inc. and its subsidiaries

REGISTER 7-16: NEG_PWR_FSR_ACT (22H) REGISTER (CONTINUED)

bit 11-10 **CFG_VS3[1:0]**: Configure Channel 3 FSR for V_{SENSE} measurements
00 = Channel 3 V_{SENSE} has unipolar +100 mV to 0V FSR (default)
01 = Channel 3 V_{SENSE} has bipolar +100 mV to -100 mV FSR
10 = Channel 3 V_{SENSE} has bipolar +50 mV to -50 mV FSR
11 = Reserved

bit 9-8 **CFG_VS4[1:0]**: Configure Channel 4 FSR for V_{SENSE} measurements
00 = Channel 4 V_{SENSE} has unipolar +100 mV to 0V FSR (default)
01 = Channel 4 V_{SENSE} has bipolar +100 mV to -100 mV FSR
10 = Channel 4 V_{SENSE} has bipolar +50 mV to -50 mV FSR
11 = Reserved

bit 7-6 **CFG_VB1[1:0]**: Configure Channel 1 FSR for V_{BUS} measurements
00 = Channel 1 V_{BUS} has unipolar +32V to 0V FSR (default)
01 = Channel 1 V_{BUS} has bipolar +32V to -32V FSR
10 = Channel 1 V_{BUS} has bipolar +16V to -16V FSR
11 = Reserved

bit 5-4 **CFG_VB2[1:0]**: Configure Channel 2 FSR for V_{BUS} measurements
00 = Channel 2 V_{BUS} has unipolar +32V to 0V FSR (default)
01 = Channel 2 V_{BUS} has bipolar +32V to -32V FSR
10 = Channel 2 V_{BUS} has bipolar +16V to -16V FSR
11 = Reserved

bit 3-2 **CFG_VB3[1:0]**: Configure Channel 3 FSR for V_{BUS} measurements
00 = Channel 3 V_{BUS} has unipolar +32V to 0V FSR (default)
01 = Channel 3 V_{BUS} has bipolar +32V to -32V FSR
10 = Channel 3 V_{BUS} has bipolar +16V to -16V FSR
11 = Reserved

bit 1-0 **CFG_VB4[1:0]**: Configure Channel 4 FSR for V_{BUS} measurements
00 = Channel 4 V_{BUS} has unipolar +32V to 0V FSR (default)
01 = Channel 4 V_{BUS} has bipolar +32V to -32V FSR
10 = Channel 4 V_{BUS} has bipolar +16V to -16V FSR
11 = Reserved

© 2021-2025 Microchip Technology Inc. and its subsidiaries

REGISTER 7-17: CTRL_LAT (23H) REGISTER

R-0	R-0	R-0	R-0	R-0	R-1	R-1	R-1
SAMPLE_MODE[3:0]				GPIO_ALERT2[1:0]		SLOW_ALERT1[1:0]	
bit 15							bit 8

R-0	R-0	R-0	R-0	U-0	U-0	U-0	U-0
CHANNEL_N_OFF[3:0]				—	—	—	—
bit 7							bit 0

Legend:			
R = Readable bit	W = Writable bit	U = Unimplemented bit, read as '0'	
-n = Value at POR	'1' = Bit is set	'0' = Bit is cleared	x = Bit is unknown

This register contains an image of Register 7-2. The bits in this register reflect the value of these settings, that was active before the most recent REFRESH command (including REFRESH_V and/or REFRESH_G). The values in register 01h may be programmed but not activated by one of the REFRESH commands and the values in 21h are currently active. This register allows software to determine the actual active setting that was active prior to the most recent REFRESH command and therefore corresponds to the dataset that is held in the readable registers. This register is valid when the results registers are valid, 1 ms after a REFRESH/_V/_G command. The CTRL_LAT register is not valid until the first REFRESH is sent after a POR event.

bit 15-12 **SAMPLE_MODE[3:0]**: These bits select one of the sampling modes listed below. These modes are exclusive – that is, only one mode can be set at any given time. One of the sampling modes is Sleep, when no sampling occurs.

0b0000 = 1024 sps adaptive accumulation (default), see **Section 5.13.1, "Adaptive Accumulator"**
0b0001 = 256 sps adaptive accumulation
0b0010 = 64 sps adaptive accumulation
0b0011 = 8 sps adaptive accumulation
0b0100 = 1024 sps, see **Section 5.15, "Conversion Cycle Controls"**
0b0101 = 256 sps
0b0110 = 64 sps
0b0111 = 8 sps
0b1000 = Single-Shot mode, see **Section 5.15.4, "Single-Shot Mode"**
0b1001 = Single-Shot 8X
0b1010 = Fast mode, see **Section 5.15.3, "Fast Mode"**
0b1011 = Burst mode, see **Section 5.15.2, "Burst Mode"**
0b1100 = Reserved
0b1101 = Reserved
0b1110 = Reserved
0b1111 = Sleep, see **Section 5.5, "Sleep State"**

bit 11-10 **GPIO_ALERT2[1:0]**: Select the signals for the GPIO/$\overline{\text{ALERT2}}$ pin. If the pin is configured as a GPIO pin, the R/W data for the pin are stored in Register 7-10.

00 = ALERT functions as an $\overline{\text{ALERT}}$ pin
01 = GPIO digital input. Read the digital value input to this pin from Register 7-10. Default for this pin.
10 = GPIO digital output. Write the digital value to be output from this pin to Register 7-10.
11 = The pin functions as the SLOW pin, taking the pin high overrides the programmed sample rate and yields a sampling rate of 8 sps.

© 2021-2025 Microchip Technology Inc. and its subsidiaries

REGISTER 7-17: CTRL_LAT (23H) REGISTER (CONTINUED)

bit 9-8 **SLOW_ALERT1[1:0]**: Select the signals for SLOW/$\overline{\text{ALERT1}}$ pin. If the pin is configured as a GPIO pin, the R/W data for the pin are stored in Register 7-10.

00 = ALERT functions as an $\overline{\text{ALERT1}}$ pin
01 = GPIO digital input. Read the digital value input to this pin from Register 7-10.
10 = GPIO digital output. Write the digital value to be output from this pin to Register 7-10.
11 = SLOW functions as the SLOW pin, taking the pin high overrides the programmed sample rate and yields a sampling rate of 8 sps (default for this pin).

bit 7-4 **CHANNEL_N_OFF[3:0]**:

Allow one or more channels to be inactive during the conversion cycle. These settings apply for normal continuous round-robin conversion cycles or Single-Shot mode, if Single-Shot mode is selected. If a channel is set to inactive, the auto-incrementing address pointer skips addresses associated with that channel unless the pointer skipping bit 1 in this register is set.

In PAC1951/2/3/4 devices, deactivating channels allows faster sampling. Burst or Fast modes are selected using bits [15:12] in this register.

PAC1954-1 default = 0b0000 (register default 0700h) (shown above)
PAC1953-1 default = 0b0001 (register value 0710h)
PAC1952-1 default = 0b0011 (register value 0730h)
PAC1952-2 default = 0b0011 (register value 0730h)
PAC1951-1 default = 0b0111 (register value 0770h)
PAC1951-2 default = 0b0111 (register value 0770h)

bit 3-0 Unimplemented, read as '0'.

REGISTER 7-18: NEG_PWR_FSR _LAT (24H) REGISTER

R/W-0	R/W-0	R/W-0	R/W-0	R/W-0	R/W-0	R/W-0	R/W-0
CFG_VS1[1:0]		CFG_VS2[1:0]		CFG_VS3[1:0]		CFG_VS4[1:0]	
bit 15							bit 8

R/W-0	R/W-0	R/W-0	R/W-0	R/W-0	R/W-0	R/W-0	R/W-0
CFG_VB1[1:0]		CFG_VB2[1:0]		CFG_VB3[1:0]		CFG_VB4[1:0]	
bit 7							bit 0

Legend:			
R = Readable bit	W = Writable bit	U = Unimplemented bit, read as '0'	
-n = Value at POR	'1' = Bit is set	'0' = Bit is cleared	x = Bit is unknown

This register holds an image of Register 7-11. The bits in this register reflect the settings that were active before the most recent REFRESH command (including REFRESH_V and/or REFRESH_G). The values in register 1Dh may be programmed but not activated by one of the REFRESH commands. This register shows the settings that were active prior to the most recent REFRESH command and therefore correspond to the dataset that is held in the readable registers. This register is valid when the results registers are valid, 1 ms after a REFRESH/_V/_G command.

bit 15-14 **CFG_VS1[1:0]**: Configure Channel 1 FSR for V_{SENSE} measurements

00 = Channel 1 V_{SENSE} has unipolar +100 mV to 0V FSR (default)
01 = Channel 1 V_{SENSE} has bipolar +100 mV to -100 mV FSR
10 = Channel 1 V_{SENSE} has bipolar +50 mV to -50 mV FSR
11 = Reserved

REGISTER 7-18: NEG_PWR_FSR _LAT (24H) REGISTER (CONTINUED)

bit 13-12 **CFG_VS2[1:0]**: Configure Channel 2 FSR for V_{SENSE} measurements
00 = Channel 2 V_{SENSE} has unipolar +100 mV to 0V FSR (default)
01 = Channel 2 V_{SENSE} has bipolar +100 mV to -100 mV FSR
10 = Channel 2 V_{SENSE} has bipolar +50 mV to -50 mV FSR
11 = Reserved

bit 11-10 **CFG_VS3[1:0]**: Configure Channel 3 FSR for V_{SENSE} measurements
00 = Channel 3 V_{SENSE} has unipolar +100 mV to 0V FSR (default)
01 = Channel 3 V_{SENSE} has bipolar +100 mV to -100 mV FSR
10 = Channel 3 V_{SENSE} has bipolar +50 mV to -50 mV FSR
11 = Reserved

bit 9-8 **CFG_VS4[1:0]**: Configure Channel 4 FSR for V_{SENSE} measurements
00 = Channel 4 V_{SENSE} has unipolar +100 mV to 0V FSR (default)
01 = Channel 4 V_{SENSE} has bipolar +100 mV to -100 mV FSR
10 = Channel 4 V_{SENSE} has bipolar +50 mV to -50 mV FSR
11 = Reserved

bit 7-6 **CFG_VB1[1:0]**: Configure Channel 1 FSR for V_{BUS} measurements
00 = Channel 1 V_{BUS} has unipolar +32V to 0V FSR (default)
01 = Channel 1 V_{BUS} has bipolar +32V to -32V FSR
10 = Channel 1 V_{BUS} has bipolar +16V to -16V FSR
11 = Reserved

bit 5-4 **CFG_VB2[1:0]**: Configure Channel 2 FSR for V_{BUS} measurements
00 = Channel 2 V_{BUS} has unipolar +32V to 0V FSR (default)
01 = Channel 2 V_{BUS} has bipolar +32V to -32V FSR
10 = Channel 2 V_{BUS} has bipolar +16V to -16V FSR
11 = Reserved

bit 3-2 **CFG_VB3[1:0]**: Configure Channel 3 FSR for V_{BUS} measurements
00 = Channel 3 V_{BUS} has unipolar +32V to 0V FSR (default)
01 = Channel 3 V_{BUS} has bipolar +32V to -32V FSR
10 = Channel 3 V_{BUS} has bipolar +16V to -16V FSR
11 = Reserved

bit 1-0 **CFG_VB4[1:0]**: Configure Channel 4 FSR for V_{BUS} measurements
00 = Channel 4 V_{BUS} has unipolar +32V to 0V FSR (default)
01 = Channel 4 V_{BUS} has bipolar +32V to -32V FSR
10 = Channel 4 V_{BUS} has bipolar +16V to -16V FSR
11 = Reserved

© 2021-2025 Microchip Technology Inc. and its subsidiaries

REGISTER 7-19: ACCUM CONFIG (25H) REGISTER

R/W-0	R/W-0	R/W-0	R/W-0	R/W-0	R/W-0	R/W-0	R/W-0
ACC1_CONFIG[1:0]		ACC2_CONFIG[1:0]		ACC3_CONFIG[1:0]		ACC4_CONFIG[1:0]	
bit 7							bit 0

Legend:			
R = Readable bit	W = Writable bit	U = Unimplemented bit, read as '0'	
-n = Value at POR	'1' = Bit is set	'0' = Bit is cleared	x = Bit is unknown

This register is used to configure the Accumulator for one of the alternate modes: V_{SENSE} Accumulation (Coulomb Counting) or V_{BUS} Accumulation (V_{BUS} integration). All bits default to zero, which is the V_{POWER} Accumulation mode for the Accumulator, useful for energy measurements.

bit 7-6 **ACC1_CONFIG[1:0]**: Configure the accumulator for Channel 1 to accumulate V_{POWER} (default), V_{SENSE} or V_{BUS}.
00 = Channel 1 Accumulator accumulates V_{POWER}
01 = Channel 1 Accumulator accumulates V_{SENSE}
10 = Channel 1 Accumulator accumulates V_{BUS}
11 = Reserved, read as '0'.

bit 5-4 **ACC2_CONFIG[1:0]**: Configure the accumulator for Channel 2 to accumulate V_{POWER} (default), V_{SENSE} or V_{BUS}.
00 = Channel 2 Accumulator accumulates V_{POWER}
01 = Channel 2 Accumulator accumulates V_{SENSE}
10 = Channel 2 Accumulator accumulates V_{BUS}
11 = Reserved, read as '0'.

bit 3-2 **ACC3_CONFIG[1:0]**: Configure the accumulator for Channel 3 to accumulate V_{POWER} (default), V_{SENSE} or V_{BUS}.
00 = Channel 3 Accumulator accumulates V_{POWER}
01 = Channel 3 Accumulator accumulates V_{SENSE}
10 = Channel 3 Accumulator accumulates V_{BUS}
11 = Reserved, read as '0'.

bit 1-0 **ACC4_CONFIG[1:0]**: Configure the accumulator for Channel 4 to accumulate V_{POWER} (default), V_{SENSE} or V_{BUS}.
00 = Channel 4 Accumulator accumulates V_{POWER}
01 = Channel 4 Accumulator accumulates V_{SENSE}
10 = Channel 4 Accumulator accumulates V_{BUS}
11 = Reserved, read as '0'.

© 2021-2025 Microchip Technology Inc. and its subsidiaries

REGISTER 7-20: ALERT STATUS (26H) REGISTER

RC-0	RC-0	RC-0	RC-0	RC-0	RC-0	RC-0	RC-0
CH1OC	CH2OC	CH3OC	CH4OC	CH1UC	CH2UC	CH3UC	CH4UC
bit 23							bit 16

RC-0	RC-0	RC-0	RC-0	RC-0	RC-0	RC-0	RC-0
CH1OV	CH2OV	CH3OV	CH4OV	CH1UV	CH2UV	CH3UV	CH4UV
bit 15							bit 8

RC-0	RC-0	RC-0	RC-0	RC-0	RC-0	U-0	U-0
CH1OP	CH2OP	CH3OP	CH4OP	ACC_OVF	ACC_COUNT	—	—
bit 7							bit 0

Legend:			
R = Readable bit	W = Writable bit	U = Unimplemented bit, read as '0'	
-n = Value at POR	'1' = Bit is set	'0' = Bit is cleared	x = Bit is unknown

Read this register to determine the cause of ALERT being tripped. See **Section 5.16.4, "ALERT Functionality – Voltage, Current and Power"**. This register is cleared when read and another conversion cycle completes. If the condition that set the ALERT is still present when the conversion cycle completes, the bit remains set. The register does not require a REFRESH to update the readable register value. The OC, UC, OP, OV and UV ALERTs are disabled by default. To enable the ones you want, set the appropriate bits in Register 7-34.

bit 23 **CH1OC**:
0 = ALERT for overcurrent on Channel 1 is not tripped
1 = ALERT for overcurrent on Channel 1 is tripped

bit 22 **CH2OC**:
0 = ALERT for overcurrent on Channel 2 is not tripped
1 = ALERT for overcurrent on Channel 2 is tripped

bit 21 **CH3OC**:
0 = ALERT for overcurrent on Channel 3 is not tripped
1 = ALERT for overcurrent on Channel 3 is tripped

bit 20 **CH4OC**:
0 = ALERT for overcurrent on Channel 4 is not tripped
1 = ALERT for overcurrent on Channel 4 is tripped

bit 19 **CH1UC**:
0 = ALERT for undercurrent on Channel 1 is not tripped
1 = ALERT for undercurrent on Channel 1 is tripped

bit 18 **CH2UC**:
0 = ALERT for undercurrent on Channel 2 is not tripped
1 = ALERT for undercurrent on Channel 2 is tripped

bit 17 **CH3UC**:
0 = ALERT for undercurrent on Channel 3 is not tripped
1 = ALERT for undercurrent on Channel 3 is tripped

bit 16 **CH4UC**:
0 = ALERT for undercurrent on Channel 4 is not tripped
1 = ALERT for undercurrent on Channel 4 is tripped

bit 15 **CH1OV**:
0 = ALERT for overvoltage on Channel 1 is not tripped
1 = ALERT for overvoltage on Channel 1 is tripped

© 2021-2025 Microchip Technology Inc. and its subsidiaries

REGISTER 7-20: ALERT STATUS (26H) REGISTER (CONTINUED)

bit 14 **CH2OV**:
0 = ALERT for overvoltage on Channel 2 is not tripped
1 = ALERT for overvoltage on Channel 2 is tripped

bit 13 **CH3OV**:
0 = ALERT for overvoltage on Channel 3 is not tripped
1 = ALERT for overvoltage on Channel 3 is tripped

bit 12 **CH4OV**:
0 = ALERT for overvoltage on Channel 4 is not tripped
1 = ALERT for overvoltage on Channel 4 is tripped

bit 11 **CH1UV**:
0 = ALERT for undervoltage on Channel 1 is not tripped
1 = ALERT for undervoltage on Channel 1 is tripped

bit 10 **CH2UV**:
0 = ALERT for undervoltage on Channel 2 is not tripped
1 = ALERT for undervoltage on Channel 2 is tripped

bit 9 **CH3UV**:
0 = ALERT for undervoltage on Channel 3 is not tripped
1 = ALERT for undervoltage on Channel 3 is tripped

bit 8 **CH4UV**:
0 = ALERT for undervoltage on Channel 4 is not tripped
1 = ALERT for undervoltage on Channel 4 is tripped

bit 7 **CH1OP**:
0 = ALERT for overpower on Channel 1 is not tripped
1 = ALERT for overpower on Channel 1 is tripped

bit 6 **CH2OP**:
0 = ALERT for overpower on Channel 2 is not tripped
1 = ALERT for overpower on Channel 2 is tripped

bit 5 **CH3OP**:
0 = ALERT for overpower on Channel 3 is not tripped
1 = ALERT for overpower on Channel 3 is tripped

bit 4 **CH4OP**:
0 = ALERT for overpower on Channel 4 has is not tripped
1 = ALERT for overpower on Channel 4 is tripped

bit 3 **ACC_OVF**: This bit signals when the Accumulator for any channel overflows or exceeds its fullness limit specified in Register 7-23.
0 = No Accumulator full related ALERT for this channel
1 = ALERT triggered by Accumulator fullness limit exceeded

bit 2 **ACC_COUNT**: This bit signals when the Accumulator Count overflows or exceeds its fullness limit specified in Register 7-23.
0 = No Accumulator full related ALERT for this channel
1 = ALERT triggered by Accumulator Count fullness limit exceeded

bit 1-0 Unimplemented, read as '0'.

© 2021-2025 Microchip Technology Inc. and its subsidiaries

REGISTER 7-21: SLOW_ALERT1 (27H) REGISTER

RW-0	RW-0	RW-0	RW-0	RW-0	RW-0	RW-0	RW-0
CH1OC	CH2OC	CH3OC	CH4OC	CH1UC	CH2UC	CH3UC	CH4UC
bit 23							bit 16

RW-0	RW-0	RW-0	RW-0	RW-0	RW-0	RW-0	RW-0
CH1OV	CH2OV	CH3OV	CH4OV	CH1UV	CH2UV	CH3UV	CH4UV
bit 15							bit 8

RW-0	RW-0	RW-0	RW-0	RW-0	RW-0	RW-0	U-0
CH1OP	CH2OP	CH3OP	CH4OP	ACC_OVF	ACC_COUNT	ALERT_CC1	—
bit 7							bit 0

Legend:			
R = Readable bit	W = Writable bit	U = Unimplemented bit, read as '0'	
-n = Value at POR	'1' = Bit is set	'0' = Bit is cleared	x = Bit is unknown

Write to this register to assign a specific ALERT signal to the SLOW/$\overline{\text{ALERT1}}$ pin. The SLOW/$\overline{\text{ALERT1}}$ pin must be configured for the ALERT function in Register 7-2 for this register to control the pin. See **Section 5.16.2, "ALERT Pin Assignments"**. ALERTs must be enabled in Register 7-34 before you can route them to a pin. Disable ALERTs in Register 7-34 before changing any limit to avoid false triggers.

bit 23 **CH1OC**:
0 = ALERT for overcurrent on Channel 1 is not enabled
1 = ALERT for overcurrent on Channel 1 is enabled

bit 22 **CH2OC**:
0 = ALERT for overcurrent on Channel 2 is not enabled
1 = ALERT for overcurrent on Channel 2 is enabled

bit 21 **CH3OC**:
0 = ALERT for overcurrent on Channel 3 is not enabled
1 = ALERT for overcurrent on Channel 3 is enabled

bit 20 **CH4OC**:
0 = ALERT for overcurrent on Channel 4 is not enabled
1 = ALERT for overcurrent on Channel 4 is enabled

bit 19 **CH1UC**:
0 = ALERT for undercurrent on Channel 1 is not enabled
1 = ALERT for undercurrent on Channel 1 is enabled

bit 18 **CH2UC**:
0 = ALERT for undercurrent on Channel 2 is not enabled
1 = ALERT for undercurrent on Channel 2 is enabled

bit 17 **CH3UC**:
0 = ALERT for undercurrent on Channel 3 is not enabled
1 = ALERT for undercurrent on Channel 3 is enabled

bit 16 **CH4UC**:
0 = ALERT for undercurrent on Channel 4 is not enabled
1 = ALERT for undercurrent on Channel 4 is enabled

bit 15 **CH1OV**:
0 = ALERT for overvoltage on Channel 1 is not enabled
1 = ALERT for overvoltage on Channel 1 is enabled

© 2021-2025 Microchip Technology Inc. and its subsidiaries

REGISTER 7-21: SLOW_ALERT1 (27H) REGISTER (CONTINUED)

bit 14 **CH2OV**:
0 = ALERT for overvoltage on Channel 2 is not enabled
1 = ALERT for overvoltage on Channel 2 is enabled

bit 13 **CH3OV**:
0 = ALERT for overvoltage on Channel 3 is not enabled
1 = ALERT for overvoltage on Channel 3 is enabled

bit 12 **CH4OV**:
0 = ALERT for overvoltage on Channel 4 is not enabled
1 = ALERT for overvoltage on Channel 4 is enabled

bit 11 **CH1UV**:
0 = ALERT for undervoltage on Channel 1 is not enabled
1 = ALERT for undervoltage on Channel 1 is enabled

bit 10 **CH2UV**:
0 = ALERT for undervoltage on Channel 2 is not enabled
1 = ALERT for undervoltage on Channel 2 is enabled

bit 9 **CH3UV**:
0 = ALERT for undervoltage on Channel 3 is not enabled
1 = ALERT for undervoltage on Channel 3 is enabled

bit 8 **CH4UV**:
0 = ALERT for undervoltage on Channel 4 is not enabled
1 = ALERT for undervoltage on Channel 4 is enabled

bit 7 **CH1OP**:
0 = ALERT for overpower on Channel 1 is not enabled
1 = ALERT for overpower on Channel 1 is enabled

bit 6 **CH2OP**:
0 = ALERT for overpower on Channel 2 is not enabled
1 = ALERT for overpower on Channel 2 is enabled

bit 5 **CH3OP**:
0 = ALERT for overpower on Channel 3 is not enabled
1 = ALERT for overpower on Channel 3 is enabled

bit 4 **CH4OP**:
0 = ALERT for overpower on Channel 4 is not enabled
1 = ALERT for overpower on Channel 4 is enabled

bit 3 **ACC_OVF**: This bit signals when the Accumulator for any channel overflows or exceeds its fullness limit specified in Register 7-23.
0 = No Accumulator full related ALERT for this channel
1 = ALERT triggered by Accumulator fullness limit exceeded

bit 2 **ACC_COUNT**: This bit signals when the Accumulator Count overflows or exceeds its fullness limit specified in Register 7-23.
0 = No Accumulator full related ALERT for this channel
1 = ALERT triggered by Accumulator Count fullness limit exceeded

bit 1 **ALERT_CC1**: Setting this bit to '1' causes the SLOW/ALERT1 pin to be asserted for 5 µs at the end of each conversion cycle. This pin must be configured as an ALERT pin for this function to trigger the SLOW/ALERT1 pin. The SLOW function is not available on this pin when the pin is used as an ALERT pin. See **Section 5.16.1, "ALERT after Complete Conversion"**.
0 = No ALERT on SLOW/ALERT1 pin at each conversion cycle complete event
1 = ALERT function on SLOW/ALERT1 pin asserted for 5 µs on each completion of the conversion cycle

bit 0 Unimplemented, read as '0'.

© 2021-2025 Microchip Technology Inc. and its subsidiaries

REGISTER 7-22: GPIO_ALERT2 (28H) REGISTER

RW-0	RW-0	RW-0	RW-0	RW-0	RW-0	RW-0	RW-0
CH1OC	CH2OC	CH3OC	CH4OC	CH1UC	CH2UC	CH3UC	CH4UC
bit 23							bit 16

RW-0	RW-0	RW-0	RW-0	RW-0	RW-0	RW-0	RW-0
CH1OV	CH2OV	CH3OV	CH4OV	CH1UV	CH2UV	CH3UV	CH4UV
bit 15							bit 8

RW-0	RW-0	RW-0	RW-0	RW-0	RW-0	RW-0	U-0
CH1OP	CH2OP	CH3OP	CH4OP	ACC_OVF	ACC_COUNT	ALERT_CC2	—
bit 7							bit 0

Legend:			
R = Readable bit	W = Writable bit	U = Unimplemented bit, read as '0'	
-n = Value at POR	'1' = Bit is set	'0' = Bit is cleared	x = Bit is unknown

Write to this register to assign a specific ALERT signal to the GPIO/$\overline{\text{ALERT2}}$ pin. The GPIO/$\overline{\text{ALERT2}}$ pin must be configured for ALERT function in Register 7-2 for this register to control the pin. See **Section 5.16.2, "ALERT Pin Assignments"**. ALERTs must be enabled in Register 7-34 before you can route them to a pin. Disable ALERTs in Register 7-34 before changing any limit to avoid false triggers.

bit 23 **CH1OC**:
0 = ALERT for overcurrent on Channel 1 is not enabled
1 = ALERT for overcurrent on Channel 1 is enabled

bit 22 **CH2OC**:
0 = ALERT for overcurrent on Channel 2 is not enabled
1 = ALERT for overcurrent on Channel 2 is enabled

bit 21 **CH3OC**:
0 = ALERT for overcurrent on Channel 3 is not enabled
1 = ALERT for overcurrent on Channel 3 is enabled

bit 20 **CH4OC**:
0 = ALERT for overcurrent on Channel 4 is not enabled
1 = ALERT for overcurrent on Channel 4 is enabled

bit 19 **CH1UC**:
0 = ALERT for undercurrent on Channel 1 is not enabled
1 = ALERT for undercurrent on Channel 1 is enabled

bit 18 **CH2UC**:
0 = ALERT for undercurrent on Channel 2 is not enabled
1 = ALERT for undercurrent on Channel 2 is enabled

bit 17 **CH3UC**:
0 = ALERT for undercurrent on Channel 3 is not enabled
1 = ALERT for undercurrent on Channel 3 is enabled

bit 16 **CH4UC**:
0 = ALERT for undercurrent on Channel 4 is not enabled
1 = ALERT for undercurrent on Channel 4 is enabled

bit 15 **CH1OV**:
0 = ALERT for overvoltage on Channel 1 is not enabled
1 = ALERT for overvoltage on Channel 1 is enabled

© 2021-2025 Microchip Technology Inc. and its subsidiaries

REGISTER 7-22: GPIO_ALERT2 (28H) REGISTER (CONTINUED)

bit 14 **CH2OV**:
0 = ALERT for overvoltage on Channel 2 is not enabled
1 = ALERT for overvoltage on Channel 2 is enabled

bit 13 **CH3OV**:
0 = ALERT for overvoltage on Channel 3 is not enabled
1 = ALERT for overvoltage on Channel 3 is enabled

bit 12 **CH4OV**:
0 = ALERT for overvoltage on Channel 4 is not enabled
1 = ALERT for overvoltage on Channel 4 is enabled

bit 11 **CH1UV**:
0 = ALERT for undervoltage on Channel 1 is not enabled
1 = ALERT for undervoltage on Channel 1 is enabled

bit 10 **CH2UV**:
0 = ALERT for undervoltage on Channel 2 is not enabled
1 = ALERT for undervoltage on Channel 2 is enabled

bit 9 **CH3UV**:
0 = ALERT for undervoltage on Channel 3 is not enabled
1 = ALERT for undervoltage on Channel 3 is enabled

bit 8 **CH4UV**:
0 = ALERT for undervoltage on Channel 4 is not enabled
1 = ALERT for undervoltage on Channel 4 is enabled

bit 7 **CH1OP**:
0 = ALERT for overpower on Channel 1 is not enabled
1 = ALERT for overpower on Channel 1 is enabled

bit 6 **CH2OP**:
0 = ALERT for overpower on Channel 2 is not enabled
1 = ALERT for overpower on Channel 2 is enabled

bit 5 **CH3OP**:
0 = ALERT for overpower on Channel 3 is not enabled
1 = ALERT for overpower on Channel 3 is enabled

bit 4 **CH4OP**:
0 = ALERT for overpower on Channel 4 is not enabled
1 = ALERT for overpower on Channel 4 is enabled

bit 3 **ACC_OVF**: This bit signals when the Accumulator for any channel overflows or exceeds its fullness limit specified in Register 7-23.
0 = No Accumulator full related ALERT for any channel
1 = ALERT triggered by Accumulator fullness limit exceeded for one or more channels

bit 2 **ACC_COUNT**: This bit signals when the Accumulator Count for any channel overflows or exceeds its fullness limit specified in Register 7-23.
0 = No Accumulator full related ALERT
1 = ALERT triggered by Accumulator Count fullness limit exceeded

bit 1 **ALERT_CC2**: Setting this bit to '1' causes the GPIO/$\overline{\text{ALERT2}}$ pin to be asserted for 5 µs at the end of each conversion cycle. This pin must be configured as an $\overline{\text{ALERT}}$ pin for this function to trigger the GPIO/$\overline{\text{ALERT2}}$ pin. The SLOW function is not available on this pin when the pin is used as an $\overline{\text{ALERT}}$ pin. See **Section 5.16.1, "ALERT after Complete Conversion"**.
0 = No ALERT on GPIO/$\overline{\text{ALERT2}}$ pin at each conversion cycle complete event
1 = ALERT function on GPIO/$\overline{\text{ALERT2}}$ pin asserted for 5 µs on each completion of the conversion cycle

bit 0 Unimplemented, read as '0'.

REGISTER 7-23: ACC FULLNESS LIMITS (29H) REGISTER

R/W-0	R/W-1	R/W-0	R/W-1	R/W-0	R/W-1	R/W-0	R/W-1
CH1 ACC FULL[1:0]		CH2 ACC FULL[1:0]		CH3 ACC FULL[1:0]		CH4 ACC FULL[1:0]	
bit 15							bit 8

R/W-0	R/W-1	U-0	U-0	U-0	U-0	U-0	U-0
ACC COUNT FULL[1:0]		—	—	—	—	—	—
bit 7							bit 0

Legend:			
R = Readable bit	W = Writable bit	U = Unimplemented bit, read as '0'	
-n = Value at POR	'1' = Bit is set	'0' = Bit is cleared	x = Bit is unknown

These limits are used to set a limit for how full the Accumulators and Accumulator Count registers can be before the Accumulator Full and Accumulator Count full limits are tripped. This allows an ALERT to be registered when the Accumulator and Accumulator Count are approaching 100% full. Disable ALERTs in Register 7-34 before changing the value to avoid false triggers.

bit 15-14 **CH1 ACC FULL[1:0]**: Fullness limit for the Channel 1 Accumulator:
00 = Full
01 = 15/16 full (default)
10 = 7/8 full
11 = 3/4 full

bit 13-12 **CH2 ACC FULL[1:0]**: Fullness limit for the Channel 2 Accumulator:
00 = Full
01 = 15/16 full (default)
10 = 7/8 full
11 = 3/4 full

bit 11-10 **CH3 ACC FULL[1:0]**: Fullness limit for the Channel 3 Accumulator:
00 = Full
01 = 15/16 full (default)
10 = 7/8 full
11 = 3/4 full

bit 9-8 **CH4 ACC FULL[1:0]**: Fullness limit for the Channel 4 Accumulator:
00 = Full
01 = 15/16 full (default)
10 = 7/8 full
11 = 3/4 full

bit 7-6 **ACC COUNT FULL[1:0]**: Fullness limit for the Accumulator Count register:
00 = Full
01 = 15/16 full (default)
10 = 7/8 full
11 = 3/4 full

bit 5-0 Unimplemented, read as '0'.

© 2021-2025 Microchip Technology Inc. and its subsidiaries

REGISTER 7-24: OC LIMITN (30H-33H) REGISTER

R/W-0	R/W-0	R/W-0	R/W-0	R/W-0	R/W-0	R/W-0	R/W-0
OC LIMIT[15:8]							
bit 15							bit 8

R/W-0	R/W-0	R/W-0	R/W-0	R/W-0	R/W-0	R/W-0	R/W-0
OC LIMIT[7:0]							
bit 7							bit 0

Legend:			
R = Readable bit	W = Writable bit	U = Unimplemented bit, read as '0'	
-n = Value at POR	'1' = Bit is set	'0' = Bit is cleared	x = Bit is unknown

bit 15-0 **OC LIMIT[15:0]**: Overcurrent (OC) limit for each channel. This limit is a two's complement number for all modes. Disable ALERTs in Register 7-34 before changing the value to avoid false triggers. Each channel has its own limit and addressable register. Address 30h determines the limit for Channel 1, 33h for Channel 4.

REGISTER 7-25: UC LIMITN (34H-37H) REGISTER

R/W-0	R/W-0	R/W-0	R/W-0	R/W-0	R/W-0	R/W-0	R/W-0
UC LIMIT[15:8]							
bit 15							bit 8

R/W-0	R/W-0	R/W-0	R/W-0	R/W-0	R/W-0	R/W-0	R/W-0
UC LIMIT[7:0]							
bit 7							bit 0

Legend:			
R = Readable bit	W = Writable bit	U = Unimplemented bit, read as '0'	
-n = Value at POR	'1' = Bit is set	'0' = Bit is cleared	x = Bit is unknown

bit 15-0 **UC LIMIT[15:0]**: Undercurrent (UC) limit for each channel. This limit is a two's complement number for all modes. Disable ALERTs in Register 7-34 before changing the value to avoid false triggers. Each channel has its own limit and addressable register. Address 34h determines the limit for Channel 1, 37h for Channel 4.

© 2021-2025 Microchip Technology Inc. and its subsidiaries

REGISTER 7-26: OP LIMITN (38H-3BH) REGISTER

R/W-0	R/W-0	R/W-0	R/W-0	R/W-0	R/W-0	R/W-0	R/W-0
OP LIMIT[23:16]							
bit 23							bit 16

R/W-0	R/W-0	R/W-0	R/W-0	R/W-0	R/W-0	R/W-0	R/W-0
OP LIMIT[15:8]							
bit 15							bit 8

R/W-0	R/W-0	R/W-0	R/W-0	R/W-0	R/W-0	R/W-0	R/W-0
OP LIMIT[7:0]							
bit 7							bit 0

Legend:			
R = Readable bit	W = Writable bit	U = Unimplemented bit, read as '0'	
-n = Value at POR	'1' = Bit is set	'0' = Bit is cleared	x = Bit is unknown

bit 23-0 **OP LIMIT[23:0]**: Overpower (OP) limit for each channel. This limit is a two's complement number for all modes. These 24 bits correspond to the upper 24 MSBs in the V_{POWER} number. The OP limit (only) is magnitude based, an OP trigger occurs when the result is more positive or more negative than the limit. Disable ALERTs in Register 7-34 before changing the value to avoid false triggers. Each channel has its own limit and addressable register. Address 38h determines the limit for Channel 1, 3Bh for Channel 4.

REGISTER 7-27: OV LIMITN (3CH-3FH) REGISTER

R/W-0	R/W-0	R/W-0	R/W-0	R/W-0	R/W-0	R/W-0	R/W-0
OV LIMIT[15:8]							
bit 15							bit 8

R/W-0	R/W-0	R/W-0	R/W-0	R/W-0	R/W-0	R/W-0	R/W-0
OV LIMIT[7:0]							
bit 7							bit 0

Legend:			
R = Readable bit	W = Writable bit	U = Unimplemented bit, read as '0'	
-n = Value at POR	'1' = Bit is set	'0' = Bit is cleared	x = Bit is unknown

bit 15-0 **OV LIMIT[15:0]**: Overvoltage (OV) limit for each channel. This limit is a two's complement number for all modes. Disable ALERTs in Register 7-34 before changing the value to avoid false triggers. Each channel has its own limit and addressable register. Address 3Ch determines the limit for Channel 1, 3Fh for Channel 4.

© 2021-2025 Microchip Technology Inc. and its subsidiaries

REGISTER 7-28: UV LIMITN (40H-43H) REGISTER

R/W-0	R/W-0	R/W-0	R/W-0	R/W-0	R/W-0	R/W-0	R/W-0
UV LIMIT[15:8]							
bit 15							bit 8

R/W-0	R/W-0	R/W-0	R/W-0	R/W-0	R/W-0	R/W-0	R/W-0
UV LIMIT[7:0]							
bit 7							bit 0

Legend:			
R = Readable bit	W = Writable bit	U = Unimplemented bit, read as '0'	
-n = Value at POR	'1' = Bit is set	'0' = Bit is cleared	x = Bit is unknown

bit 15-0 **UV LIMIT[15:0]**: Undervoltage (UV) limit for each channel. This limit is a two's complement number for all modes. Disable ALERTs in Register 7-34 before changing the value to avoid false triggers. Each channel has its own limit and addressable register. Address 40h determines the limit for Channel 1, 43h for Channel 4.

REGISTER 7-29: OC LIMIT NSAMPLES (44H) REGISTER

R/W-0	R/W-0	R/W-0	R/W-0	R/W-0	R/W-0	R/W-0	R/W-0
NSAMPLES OC CH1[1:0]		NSAMPLES OC CH2[1:0]		NSAMPLES OC CH3[1:0]		NSAMPLES OC CH4[1:0]	
bit 7							bit 0

Legend:			
R = Readable bit	W = Writable bit	U = Unimplemented bit, read as '0'	
-n = Value at POR	'1' = Bit is set	'0' = Bit is cleared	x = Bit is unknown

Number of consecutive samples exceeding the overcurrent limit that are required to trigger the ALERT function for each channel. The default is 1 sample (00). The sample counter is not reset until a conversion is completed to confirm that the ALERT condition is no longer present. A single conversion immediately after the ALERT is cleared resets the ALERT. Disable ALERTs in Register 7-34 before changing the value to avoid false triggers.

bit 7-6 **NSAMPLES OC CH1[1:0]**: Consecutive sample count to trigger the OC ALERT for Channel 1
00 = 1 (default)
01 = 4 samples
10 = 8 samples
11 = 16 samples

bit 5-4 **NSAMPLES OC CH2[1:0]**: Consecutive sample count to trigger the OC ALERT for Channel 2
00 = 1 (default)
01 = 4 samples
10 = 8 samples
11 = 16 samples

bit 3-2 **NSAMPLES OC CH3[1:0]**: Consecutive sample count to trigger the OC ALERT for Channel 3
00 = 1 (default)
01 = 4 samples
10 = 8 samples
11 = 16 samples

bit 1-0 **NSAMPLES OC CH4[1:0]**: Consecutive sample count to trigger the OC ALERT for Channel 4
00 = 1 (default)
01 = 4 samples
10 = 8 samples
11 = 16 samples

© 2021-2025 Microchip Technology Inc. and its subsidiaries

REGISTER 7-30: UC LIMIT NSAMPLES (45H) REGISTER

R/W-0	R/W-0	R/W-0	R/W-0	R/W-0	R/W-0	R/W-0	R/W-0
NSAMPLES UC CH1[1:0]		NSAMPLES UC CH2[1:0]		NSAMPLES UC CH3[1:0]		NSAMPLES UC CH4[1:0]	
bit 7							bit 0

Legend:			
R = Readable bit	W = Writable bit	U = Unimplemented bit, read as '0'	
-n = Value at POR	'1' = Bit is set	'0' = Bit is cleared	x = Bit is unknown

Number of consecutive samples exceeding the undercurrent limit that are required to trigger the ALERT function for each channel. The default is 1. Disable ALERTs in Register 7-34 before changing the value to avoid false triggers.

bit 7-6 **NSAMPLES UC CH1[1:0]**: Consecutive sample count to trigger the UC ALERT for Channel 1
00 = 1 (default)
01 = 4 samples
10 = 8 samples
11 = 16 samples

bit 5-4 **NSAMPLES UC CH2[1:0]**: Consecutive sample count to trigger the UC ALERT for Channel 2
00 = 1 (default)
01 = 4 samples
10 = 8 samples
11 = 16 samples

bit 3-2 **NSAMPLES UC CH3[1:0]**: Consecutive sample count to trigger the UC ALERT for Channel 3
00 = 1 (default)
01 = 4 samples
10 = 8 samples
11 = 16 samples

bit 1-0 **NSAMPLES UC CH4[1:0]**: Consecutive sample count to trigger the UC ALERT for Channel 4
00 = 1 (default)
01 = 4 samples
10 = 8 samples
11 = 16 samples

© 2021-2025 Microchip Technology Inc. and its subsidiaries

REGISTER 7-31: OP LIMIT NSAMPLES (46H) REGISTER

R/W-0	R/W-0	R/W-0	R/W-0	R/W-0	R/W-0	R/W-0	R/W-0
NSAMPLES OP CH1[1:0]		NSAMPLES OP CH2[1:0]		NSAMPLES OP CH3[1:0]		NSAMPLES OP CH4[1:0]	
bit 7							bit 0

Legend:			
R = Readable bit	W = Writable bit	U = Unimplemented bit, read as '0'	
-n = Value at POR	'1' = Bit is set	'0' = Bit is cleared	x = Bit is unknown

Number of consecutive samples exceeding the overpower limit that are required to trigger the ALERT function for each channel. The default is 1. Disable ALERTs in Register 7-34 before changing the value to avoid false triggers.

bit 7-6 **NSAMPLES OP CH1[1:0]**: Consecutive sample count to trigger the OP ALERT for Channel 1
00 = 1 (default)
01 = 4 samples
10 = 8 samples
11 = 16 samples

bit 5-4 **NSAMPLES OP CH2[1:0]**: Consecutive sample count to trigger the OP ALERT for Channel 2
00 = 1 (default)
01 = 4 samples
10 = 8 samples
11 = 16 samples

bit 3-2 **NSAMPLES OP CH3[1:0]**: Consecutive sample count to trigger the OP ALERT for Channel 3
00 = 1 (default)
01 = 4 samples
10 = 8 samples
11 = 16 samples

bit 1-0 **NSAMPLES OP CH4[1:0]**: Consecutive sample count to trigger the OP ALERT for Channel 4
00 = 1 (default)
01 = 4 samples
10 = 8 samples
11 = 16 samples

© 2021-2025 Microchip Technology Inc. and its subsidiaries

REGISTER 7-32: OV LIMIT NSAMPLES (47H) REGISTER

R/W-0	R/W-0	R/W-0	R/W-0	R/W-0	R/W-0	R/W-0	R/W-0
NSAMPLES OV CH1[1:0]		NSAMPLES OV CH2[1:0]		NSAMPLES OV CH3[1:0]		NSAMPLES OV CH4[1:0]	
bit 7							bit 0

Legend:			
R = Readable bit	W = Writable bit	U = Unimplemented bit, read as '0'	
-n = Value at POR	'1' = Bit is set	'0' = Bit is cleared	x = Bit is unknown

Number of consecutive samples exceeding the overvoltage limit that are required to trigger the ALERT function for each channel. The default is 1. Disable ALERTs in Register 7-34 before changing the value to avoid false triggers.

bit 7-6 **NSAMPLES OV CH1[1:0]**: Consecutive sample count to trigger the OV ALERT for Channel 1
00 = 1 (default)
01 = 4 samples
10 = 8 samples
11 = 16 samples

bit 5-4 **NSAMPLES OV CH2[1:0]**: Consecutive sample count to trigger the OV ALERT for Channel 2
00 = 1 (default)
01 = 4 samples
10 = 8 samples
11 = 16 samples

bit 3-2 **NSAMPLES OV CH3[1:0]**: Consecutive sample count to trigger the OV ALERT for Channel 3
00 = 1 (default)
01 = 4 samples
10 = 8 samples
11 = 16 samples

bit 1-0 **NSAMPLES OV CH4[1:0]**: Consecutive sample count to trigger the OV ALERT for Channel 4
00 = 1 (default)
01 = 4 samples
10 = 8 samples
11 = 16 samples

© 2021-2025 Microchip Technology Inc. and its subsidiaries

REGISTER 7-33: UV LIMIT NSAMPLES (48H) REGISTER

R/W-0	R/W-0	R/W-0	R/W-0	R/W-0	R/W-0	R/W-0	R/W-0
NSAMPLES UV CH1[1:0]		NSAMPLES UV CH2[1:0]		NSAMPLES UV CH3[1:0]		NSAMPLES UV CH4[1:0]	
bit 7							bit 0

Legend:			
R = Readable bit	W = Writable bit	U = Unimplemented bit, read as '0'	
-n = Value at POR	'1' = Bit is set	'0' = Bit is cleared	x = Bit is unknown

Number of consecutive samples exceeding the undervoltage limit that are required to trigger the ALERT function for each channel. The default is 1. Disable ALERTs in Register 7-34 before changing the value to avoid false triggers.

bit 7-6 **NSAMPLES UV CH1[1:0]**: Consecutive sample count to trigger the UV ALERT for Channel 1
00 = 1 (default)
01 = 4 samples
10 = 8 samples
11 = 16 samples

bit 5-4 **NSAMPLES UV CH2[1:0]**: Consecutive sample count to trigger the UV ALERT for Channel 2
00 = 1 (default)
01 = 4 samples
10 = 8 samples
11 = 16 samples

bit 3-2 **NSAMPLES UV CH3[1:0]**: Consecutive sample count to trigger the UV ALERT for Channel 3
00 = 1 (default)
01 = 4 samples
10 = 8 samples
11 = 16 samples

bit 1-0 **NSAMPLES UV CH4[1:0]**: Consecutive sample count to trigger the UV ALERT for Channel 4
00 = 1 (default)
01 = 4 samples
10 = 8 samples
11 = 16 samples

© 2021-2025 Microchip Technology Inc. and its subsidiaries

REGISTER 7-34: ALERT ENABLE (49H) REGISTER

RW-0	RW-0	RW-0	RW-0	RW-0	RW-0	RW-0	RW-0
CH1OC	CH2OC	CH3OC	CH4OC	CH1UC	CH2UC	CH3UC	CH4UC
bit 23							bit 16

RW-0	RW-0	RW-0	RW-0	RW-0	RW-0	RW-0	RW-0
CH1OV	CH2OV	CH3OV	CH4OV	CH1UV	CH2UV	CH3UV	CH4UV
bit 15							bit 8

RW-0	RW-0	RW-0	RW-0	RW-0	RW-0	RW-0	U-0
CH1OP	CH2OP	CH3OP	CH4OP	ACC_OVF	ACC_COUNT	ALERT_CC	—
bit 7							bit 0

Legend:			
R = Readable bit	W = Writable bit	U = Unimplemented bit, read as '0'	
-n = Value at POR	'1' = Bit is set	'0' = Bit is cleared	x = Bit is unknown

Write to these bits to enable ALERT functions. See **Section 5.16.4, "ALERT Functionality – Voltage, Current and Power"**. To enable OC, UC, OP, OV, UV ALERTs, write '1' to the appropriate bit. ALERTs must be enabled in this register before they can be routed to an ALERT pin. Disable ALERTs in this register before modifying any of the various limits in Register 7-24, Register 7-25, Register 7-26, Register 7-27, Register 7-28 to avoid false triggers. A REFRESH (or REFRESH_V/G) is required to activate the enabled ALERTs.

bit 23 **CH1OC**:
0 = ALERT for overcurrent on Channel 1 is disabled
1 = ALERT for overcurrent on Channel 1 is enabled

bit 22 **CH2OC**:
0 = ALERT for overcurrent on Channel 2 is disabled
1 = ALERT for overcurrent on Channel 2 is enabled

bit 21 **CH3OC**:
0 = ALERT for overcurrent on Channel 3 is disabled
1 = ALERT for overcurrent on Channel 3 is enabled

bit 20 **CH4OC**:
0 = ALERT for overcurrent on Channel 4 is disabled
1 = ALERT for overcurrent on Channel 4 is enabled

bit 19 **CH1UC**:
0 = ALERT for undercurrent on Channel 1 is disabled
1 = ALERT for undercurrent on Channel 1 is enabled

bit 18 **CH2UC**:
0 = ALERT for undercurrent on Channel 2 is disabled
1 = ALERT for undercurrent on Channel 2 is enabled

bit 17 **CH3UC**:
0 = ALERT for undercurrent on Channel 3 is disabled
1 = ALERT for undercurrent on Channel 3 is enabled

bit 16 **CH4UC**:
0 = ALERT for undercurrent on Channel 4 is disabled
1 = ALERT for undercurrent on Channel 4 is enabled

© 2021-2025 Microchip Technology Inc. and its subsidiaries

REGISTER 7-34: ALERT ENABLE (49H) REGISTER (CONTINUED)

bit 15 **CH1OV**:
0 = ALERT for overvoltage on Channel 1 is disabled
1 = ALERT for overvoltage on Channel 1 is enabled

bit 14 **CH2OV**:
0 = ALERT for overvoltage on Channel 2 is disabled
1 = ALERT for overvoltage on Channel 2 is enabled

bit 13 **CH3OV**:
0 = ALERT for overvoltage on Channel 3 is disabled
1 = ALERT for overvoltage on Channel 3 is enabled

bit 12 **CH4OV**:
0 = ALERT for overvoltage on Channel 4 is disabled
1 = ALERT for overvoltage on Channel 4 is enabled

bit 11 **CH1UV**:
0 = ALERT for undervoltage on Channel 1 is disabled
1 = ALERT for undervoltage on Channel 1 is enabled

bit 10 **CH2UV**:
0 = ALERT for undervoltage on Channel 2 is disabled
1 = ALERT for undervoltage on Channel 2 is enabled

bit 9 **CH3UV**:
0 = ALERT for undervoltage on Channel 3 is disabled
1 = ALERT for undervoltage on Channel 3 is enabled

bit 8 **CH4UV**:
0 = ALERT for undervoltage on Channel 4 is disabled
1 = ALERT for undervoltage on Channel 4 is enabled

bit 7 **CH1OP**:
0 = ALERT for overpower on Channel 1 is disabled
1 = ALERT for overpower on Channel 1 is enabled

bit 6 **CH2OP**:
0 = ALERT for overpower on Channel 2 is disabled
1 = ALERT for overpower on Channel 2 is enabled

bit 5 **CH3OP**:
0 = ALERT for overpower on Channel 3 is disabled
1 = ALERT for overpower on Channel 3 is enabled

bit 4 **CH4OP**:
0 = ALERT for overpower on Channel 4 is disabled
1 = ALERT for overpower on Channel 4 is enabled

bit 3 **ACC_OVF**:
0 = ALERT for Accumulator fullness limit exceeded is disabled
1 = ALERT for Accumulator fullness limit exceeded for one or more channels is enabled

bit 2 **ACC_COUNT**:
0 = ALERT for Accumulator Count fullness is disabled
1 = ALERT for Accumulator Count fullness limit exceeded is enabled

bit 1 **ALERT_CC**:
0 = ALERT for Conversion Cycle Complete is disabled
1 = ALERT for Conversion Cycle Complete is enabled

bit 0 Unimplemented, read as '0'.

© 2021-2025 Microchip Technology Inc. and its subsidiaries

REGISTER 7-35: ACCUM CONFIG ACT (4AH) REGISTER

R/W-0	R/W-0	R/W-0	R/W-0	R/W-0	R/W-0	R/W-0	R/W-0
ACC1_CONFIG[1:0]		ACC2_CONFIG[1:0]		ACC3_CONFIG[1:0]		ACC4_CONFIG[1:0]	
bit 7							bit 0

Legend:			
R = Readable bit	W = Writable bit	U = Unimplemented bit, read as '0'	
-n = Value at POR	'1' = Bit is set	'0' = Bit is cleared	x = Bit is unknown

This register contains an image of Register 7-19 and reflects the current active values of these settings, whereas the values in register 25h may be programmed but not activated by one of the REFRESH commands. This register allows software to determine the actual active settings.

bit 7-6 **ACC1_CONFIG[1:0]**: Configure the accumulator for Channel 1 to accumulate V_{POWER} (default), V_{SENSE} or V_{BUS}.
00 = Channel 1 Accumulator accumulates V_{POWER}
01 = Channel 1 Accumulator accumulates V_{SENSE}
10 = Channel 1 Accumulator accumulates V_{BUS}
11 = Reserved, read as '0'.

bit 5-4 **ACC2_CONFIG[1:0]**: Configure the accumulator for Channel 2 to accumulate V_{POWER} (default), V_{SENSE} or V_{BUS}.
00 = Channel 2 Accumulator accumulates V_{POWER}
01 = Channel 2 Accumulator accumulates V_{SENSE}
10 = Channel 2 Accumulator accumulates V_{BUS}
11 = Reserved, read as '0'.

bit 3-2 **ACC3_CONFIG[1:0]**: Configure the accumulator for Channel 3 to accumulate V_{POWER} (default), V_{SENSE} or V_{BUS}.
00 = Channel 3 Accumulator accumulates V_{POWER}
01 = Channel 3 Accumulator accumulates V_{SENSE}
10 = Channel 3 Accumulator accumulates V_{BUS}
11 = Reserved, read as '0'.

bit 1-0 **ACC4_CONFIG[1:0]**: Configure the accumulator for Channel 4 to accumulate V_{POWER} (default), V_{SENSE} or V_{BUS}.
00 = Channel 4 Accumulator accumulates V_{POWER}
01 = Channel 4 Accumulator accumulates V_{SENSE}
10 = Channel 4 Accumulator accumulates V_{BUS}
11 = Reserved, read as '0'.

© 2021-2025 Microchip Technology Inc. and its subsidiaries

REGISTER 7-36: ACCUM CONFIG LAT (4BH) REGISTER

R/W-0	R/W-0	R/W-0	R/W-0	R/W-0	R/W-0	R/W-0	R/W-0
ACC1_CONFIG[1:0]		ACC2_CONFIG[1:0]		ACC3_CONFIG[1:0]		ACC4_CONFIG[1:0]	
bit 7							bit 0

Legend:			
R = Readable bit	W = Writable bit	U = Unimplemented bit, read as '0'	
-n = Value at POR	'1' = Bit is set	'0' = Bit is cleared	x = Bit is unknown

This register contains an image of Register 7-19. The bits in this register reflect the value of these settings that were active before the most recent REFRESH command (including REFRESH_V and/of REFRESH_G). The values in register 25h may be programmed but not activated by one of the REFRESH commands and the values in register 4Ah are currently active. This register allows software to determine the actual setting that was active prior to the most recent REFRESH command and, therefore, corresponds to the dataset that is held in the readable registers. This register is valid when the results registers are valid, 1 ms after a REFRESH/_V/_G command.

bit 7-6 **ACC1_CONFIG[1:0]**: Configure the accumulator for Channel 1 to accumulate V_{POWER} (default), V_{SENSE} or V_{BUS}.
00 = Channel 1 Accumulator accumulates V_{POWER}
01 = Channel 1 Accumulator accumulates V_{SENSE}
10 = Channel 1 Accumulator accumulates V_{BUS}
11 = Reserved, read as '0'.

bit 5-4 **ACC2_CONFIG[1:0]**: Configure the accumulator for Channel 2 to accumulate V_{POWER} (default), V_{SENSE} or V_{BUS}.
00 = Channel 2 Accumulator accumulates V_{POWER}
01 = Channel 2 Accumulator accumulates V_{SENSE}
10 = Channel 2 Accumulator accumulates V_{BUS}
11 = Reserved, read as '0'.

bit 3-2 **ACC3_CONFIG[1:0]**: Configure the accumulator for Channel 3 to accumulate V_{POWER} (default), V_{SENSE} or V_{BUS}.
00 = Channel 3 Accumulator accumulates V_{POWER}
01 = Channel 3 Accumulator accumulates V_{SENSE}
10 = Channel 3 Accumulator accumulates V_{BUS}
11 = Reserved, read as '0'.

bit 1-0 **ACC4_CONFIG[1:0]**: Configure the accumulator for Channel 4 to accumulate V_{POWER} (default), V_{SENSE} or V_{BUS}.
00 = Channel 4 Accumulator accumulates V_{POWER}
01 = Channel 4 Accumulator accumulates V_{SENSE}
10 = Channel 4 Accumulator accumulates V_{BUS}
11 = Reserved, read as '0'.

© 2021-2025 Microchip Technology Inc. and its subsidiaries

REGISTER 7-37: PRODUCT ID (FDH) REGISTER

R-0	R-1	R-1	R-1	R-0	R-1	R-0	R-0
PID[7:0]							
bit 7							bit 0

Legend:			
R = Readable bit	W = Writable bit	U = Unimplemented bit, read as '0'	
-n = Value at POR	'1' = Bit is set	'0' = Bit is cleared	x = Bit is unknown

bit 7-0 **PID[7:0]**: This register contains the Product ID for the PAC1951/2/3/4. These values depend on the part version:

`0111_1000` for PAC1951-1
`0111_1001` for PAC1952-1
`0111_1010` for PAC1953-1
`0111_1011` for PAC1954-1
`0111_1100` for PAC1951-2
`0111_1101` for PAC1952-2

REGISTER 7-38: MANUFACTURER ID (FEH) REGISTER

R-0	R-1	R-0	R-1	R-0	R-1	R-0	R-0
MID[7:0]							
bit 7							bit 0

Legend:			
R = Readable bit	W = Writable bit	U = Unimplemented bit, read as '0'	
-n = Value at POR	'1' = Bit is set	'0' = Bit is cleared	x = Bit is unknown

bit 7-0 **MID[7:0]**: The Manufacturer ID register identifies Microchip as the manufacturer of the PAC1951/2/3/4.
This value is `54h`.

REGISTER 7-39: REVISION ID (FFH) REGISTER

R-0	R-0	R-0	R-0	R-0	R-0	R-1	R-0
RID[7:0]							
bit 7							bit 0

Legend:			
R = Readable bit	W = Writable bit	U = Unimplemented bit, read as '0'	
-n = Value at POR	'1' = Bit is set	'0' = Bit is cleared	x = Bit is unknown

bit 7-0 **RID[7:0]**: The Revision register identifies the die revision.
`0000 0010b` for the initial release.

8.0 PACKAGING INFORMATION

8.1 Package Marking Information

16-Lead VQFN
3 x 3 x 0.9 mm

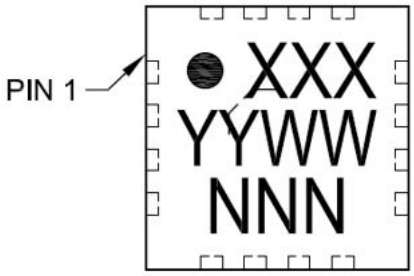

Part Number	Code
PAC1951T-1E/4MX	951
PAC1951T-2E/4MX	51B
PAC1952T-1E/4MX	952
PAC1952T-2E/4MX	52B
PAC1953T-E/4MX	953
PAC1954T-E/4MX	954

Example:

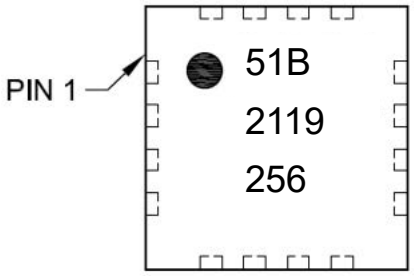

16-Ball WLCSP
2.215 x 2.16 x 0.641 mm
2.215 x 2.16 x 0.319 mm (PAC1954 only)

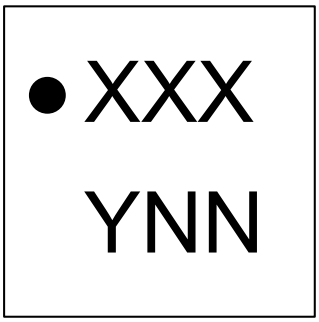

Part Number	Code
PAC1951T-1E/J6CX	951
PAC1951T-2E/J6CX	51B
PAC1952T-1E/J6CX	952
PAC1952T-2E/J6CX	52B
PAC1953T-E/J6CX	953
PAC1954T-E/J6CX	954
PAC1954T-E/5SW	54B

Example:

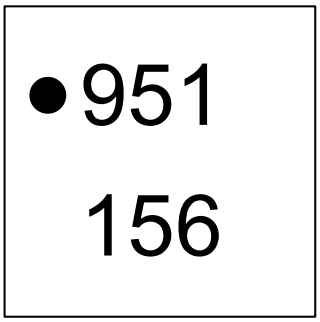

Legend:	XX...X	Customer-specific information
	Y	Year code (last digit of calendar year)
	YY	Year code (last 2 digits of calendar year)
	WW	Week code (week of January 1 is week ‘01’)
	NNN	Alphanumeric traceability code
	(e3)	Pb-free JEDEC® designator for Matte Tin (Sn)
	*	This package is Pb-free. The Pb-free JEDEC designator ((e3)) can be found on the outer packaging for this package.

Note: In the event the full Microchip part number cannot be marked on one line, it will be carried over to the next line, thus limiting the number of available characters for customer-specific information.

© 2021-2025 Microchip Technology Inc. and its subsidiaries

8.2 Package Drawings

16-Lead Very Thin Quad Flat, No Lead Package (4MX) - 3x3x0.9 mm Body [VQFN] With 1.10 mm Exposed Pad and Stepped Wettable Flanks

Note: For the most current package drawings, please see the Microchip Packaging Specification located at http://www.microchip.com/packaging

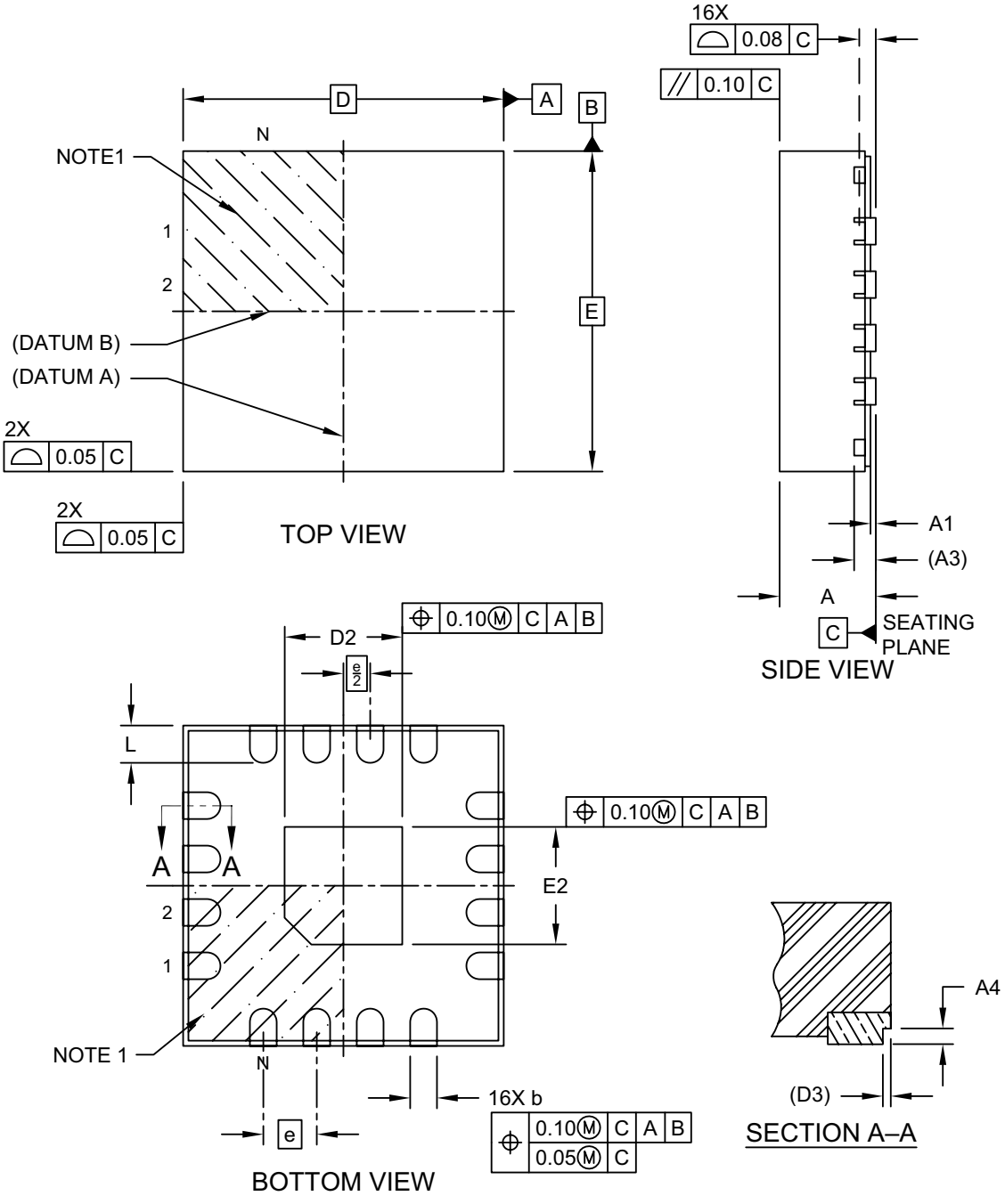

Microchip Technology Drawing C04-508 Rev A Sheet 1 of 2

16-Lead Very Thin Quad Flat, No Lead Package (4MX) - 3x3x0.9 mm Body [VQFN] With 1.10 mm Exposed Pad and Stepped Wettable Flanks

Note: For the most current package drawings, please see the Microchip Packaging Specification located at http://www.microchip.com/packaging

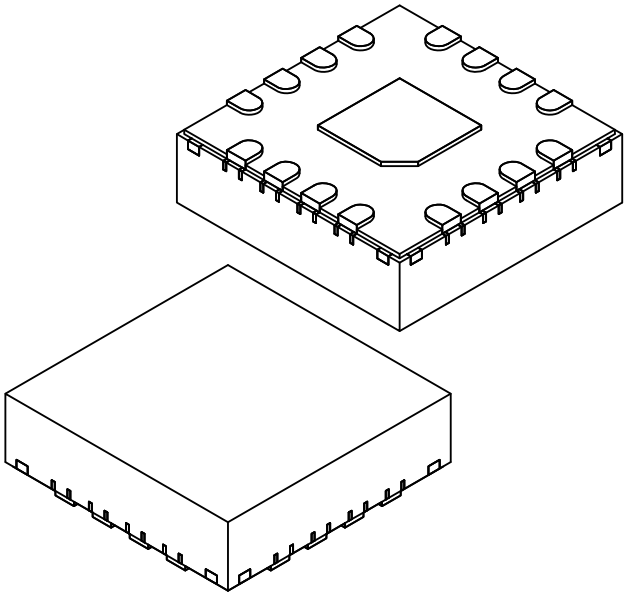

Units		MILLIMETERS		
Dimension Limits		MIN	NOM	MAX
Number of Terminals	N		16	
Pitch	e		0.50 BSC	
Overall Height	A	0.80	0.85	0.90
Standoff	A1	0.00	0.02	0.05
Terminal Thickness	A3		0.203 REF	
Overall Length	D		3.00 BSC	
Exposed Pad Length	D2	1.00	1.10	1.20
Overall Width	E		3.00 BSC	
Exposed Pad Width	E2	1.00	1.10	1.20
Terminal Width	b	0.20	0.25	0.30
Terminal Length	L	0.25	0.35	0.45
Wettable Flank Step Length	D3		0.05 REF	
Wettable Flank Step Height	A4	0.10	-	0.19

Notes:

1. Pin 1 visual index feature may vary, but must be located within the hatched area.
2. Package is saw singulated
3. Dimensioning and tolerancing per ASME Y14.5M

   BSC: Basic Dimension. Theoretically exact value shown without tolerances.

   REF: Reference Dimension, usually without tolerance, for information purposes only.

Microchip Technology Drawing C04-508 Rev A Sheet 2 of 2

© 2021-2025 Microchip Technology Inc. and its subsidiaries

16-Lead Very Thin Quad Flat, No Lead Package (4MX) - 3x3x0.9 mm Body [VQFN]
With 1.10 mm Exposed Pad and Stepped Wettable Flanks

Note: For the most current package drawings, please see the Microchip Packaging Specification located at http://www.microchip.com/packaging

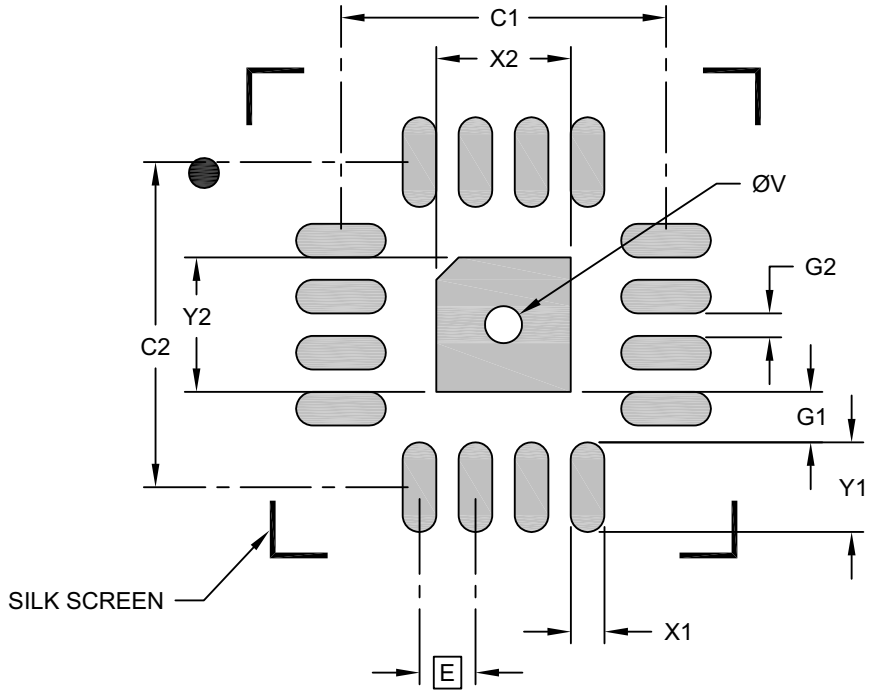

RECOMMENDED LAND PATTERN

Units		MILLIMETERS		
Dimension Limits		MIN	NOM	MAX
Contact Pitch	E		0.50 BSC	
Optional Center Pad Width	X2			1.20
Optional Center Pad Length	Y2			1.20
Contact Pad Spacing	C1		2.90	
Contact Pad Spacing	C2		2.90	
Contact Pad Width (X16)	X1			0.30
Contact Pad Length (X16)	Y1			0.80
Contact Pad to Center Pad (X16)	G1	0.45		
Contact Pad to Contact Pad (X12)	G2	0.20		
Thermal Via Diameter	V		0.33	

Notes:

1. Dimensioning and tolerancing per ASME Y14.5M
   BSC: Basic Dimension. Theoretically exact value shown without tolerances.
2. For best soldering results, thermal vias, if used, should be filled or tented to avoid solder loss during reflow process

Microchip Technology Drawing C04-2508 Rev A

© 2021-2025 Microchip Technology Inc. and its subsidiaries

16-Ball Wafer Level Chip Scale Package (CS) - 2.215x2.160x0.641 mm Body [WLCSP]

Note: For the most current package drawings, please see the Microchip Packaging Specification located at http://www.microchip.com/packaging

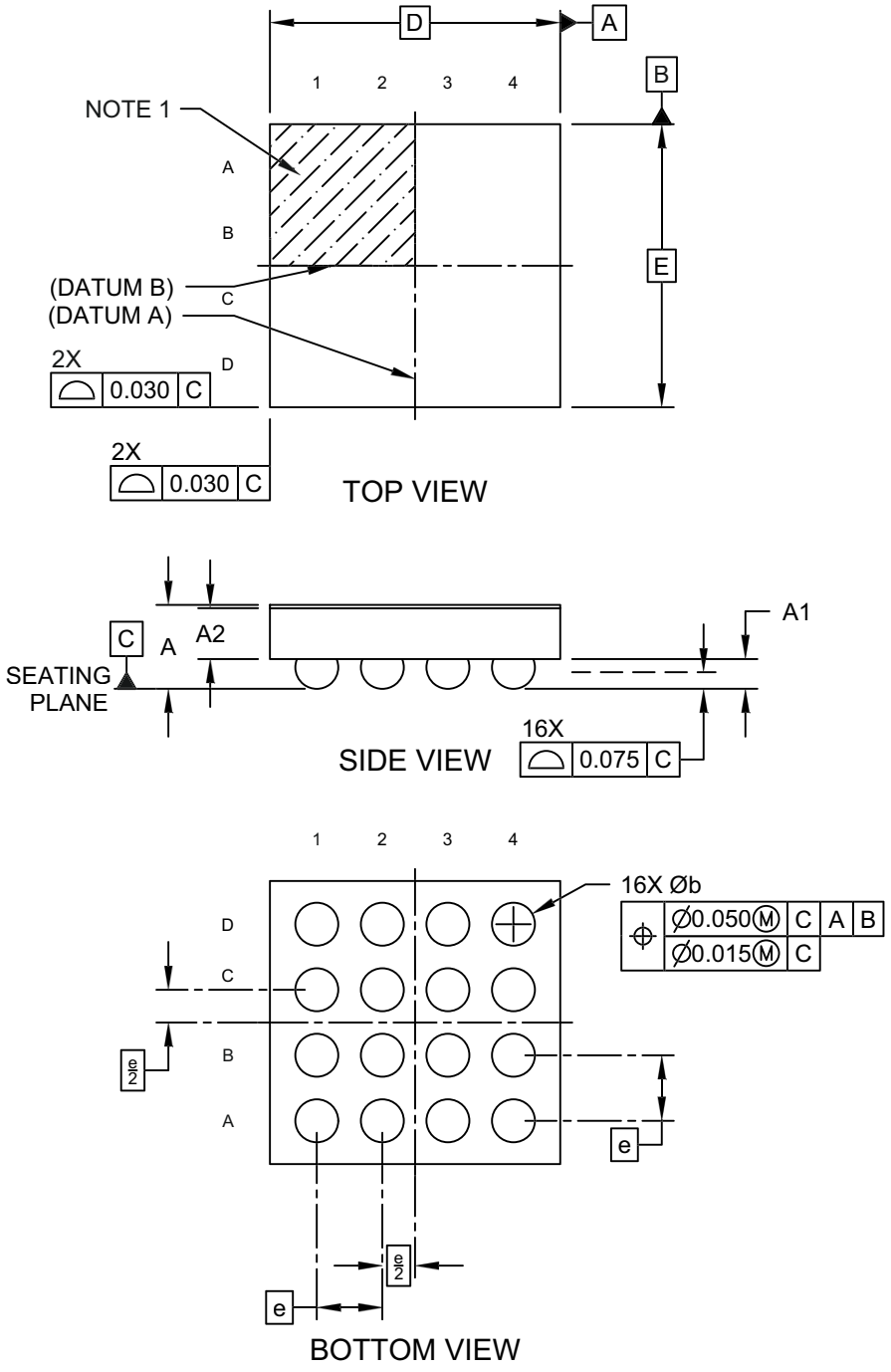

Microchip Technology Drawing C04-06036 Rev D Sheet 1 of 2

© 2021-2025 Microchip Technology Inc. and its subsidiaries

16-Ball Wafer Level Chip Scale Package (CS) - 2.215x2.160x0.641 mm Body [WLCSP]

Note: For the most current package drawings, please see the Microchip Packaging Specification located at http://www.microchip.com/packaging

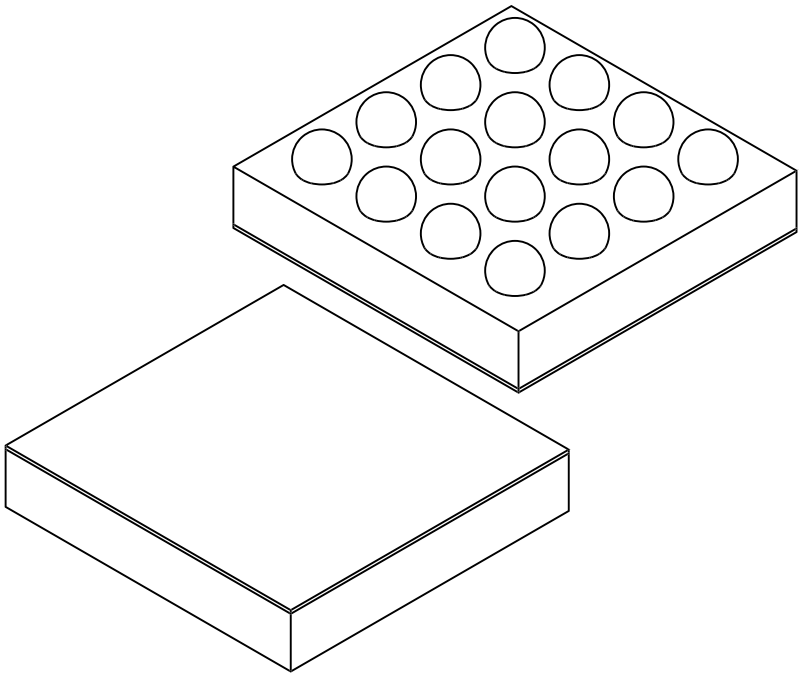

Units		MILLIMETERS		
Dimension Limits		MIN	NOM	MAX
Number of Terminals	N		16	
Pitch	e		0.50 BSC	
Overall Height	A	0.601	0.641	0.679
Standoff	A1	0.197	-	0.257
Die Thickness	A2	0.363	0.388	0.413
Overall Length	D		2.215 BSC	
Overall Width	E		2.160 BSC	
Terminal Diameter	b	0.297	0.327	0.357

Notes:

1. Pin 1 visual index feature may vary, but it must be located within the hatched area.
2. Dimensioning and tolerancing per ASME Y14.5M

   BSC: Basic Dimension. Theoretically exact value shown without tolerances.

   REF: Reference Dimension, usually without tolerance, for information purposes only.

Microchip Technology Drawing C04-06036 Rev D Sheet 2 of 2

© 2021-2025 Microchip Technology Inc. and its subsidiaries

16-Ball Wafer Level Chip Scale Package (CS) - 2.215x2.160x0.641 mm Body [WLCSP]

Note: For the most current package drawings, please see the Microchip Packaging Specification located at http://www.microchip.com/packaging

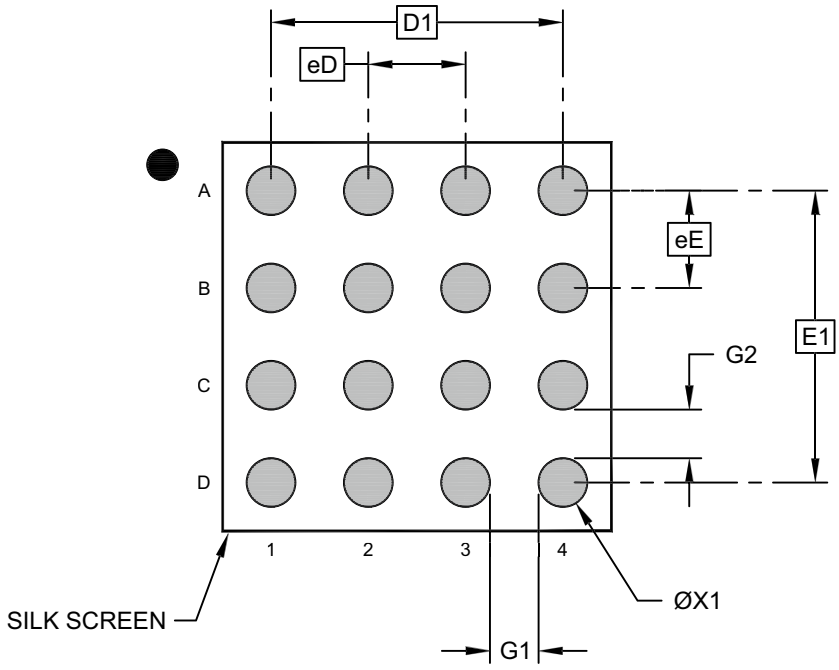

RECOMMENDED LAND PATTERN

Units		MILLIMETERS		
Dimension Limits		MIN	NOM	MAX
Contact Pitch	eD		0.50 BSC	
Contact Pitch	eE		0.50 BSC	
Overall Pitch	D1		1.50 BSC	
Overall Pitch	E1		1.50 BSC	
Space Between Contacts	G1		0.25	
Space Between Contacts	G2		0.25	
Contact Diameter	ØX1		0.25	

Notes:

1. Dimensioning and tolerancing per ASME Y14.5M

   BSC: Basic Dimension. Theoretically exact value shown without tolerances.
2. For best soldering results, thermal vias, if used, should be filled or tented to avoid solder loss during the reflow process.

Microchip Technology Drawing C04-08036 Rev. D

© 2021-2025 Microchip Technology Inc. and its subsidiaries

16-Ball Wafer Level Chip Scale Package (5SW) - 2.215x2.160x0.319 mm Body [WLCSP]

Note: For the most current package drawings, please see the Microchip Packaging Specification located at http://www.microchip.com/packaging

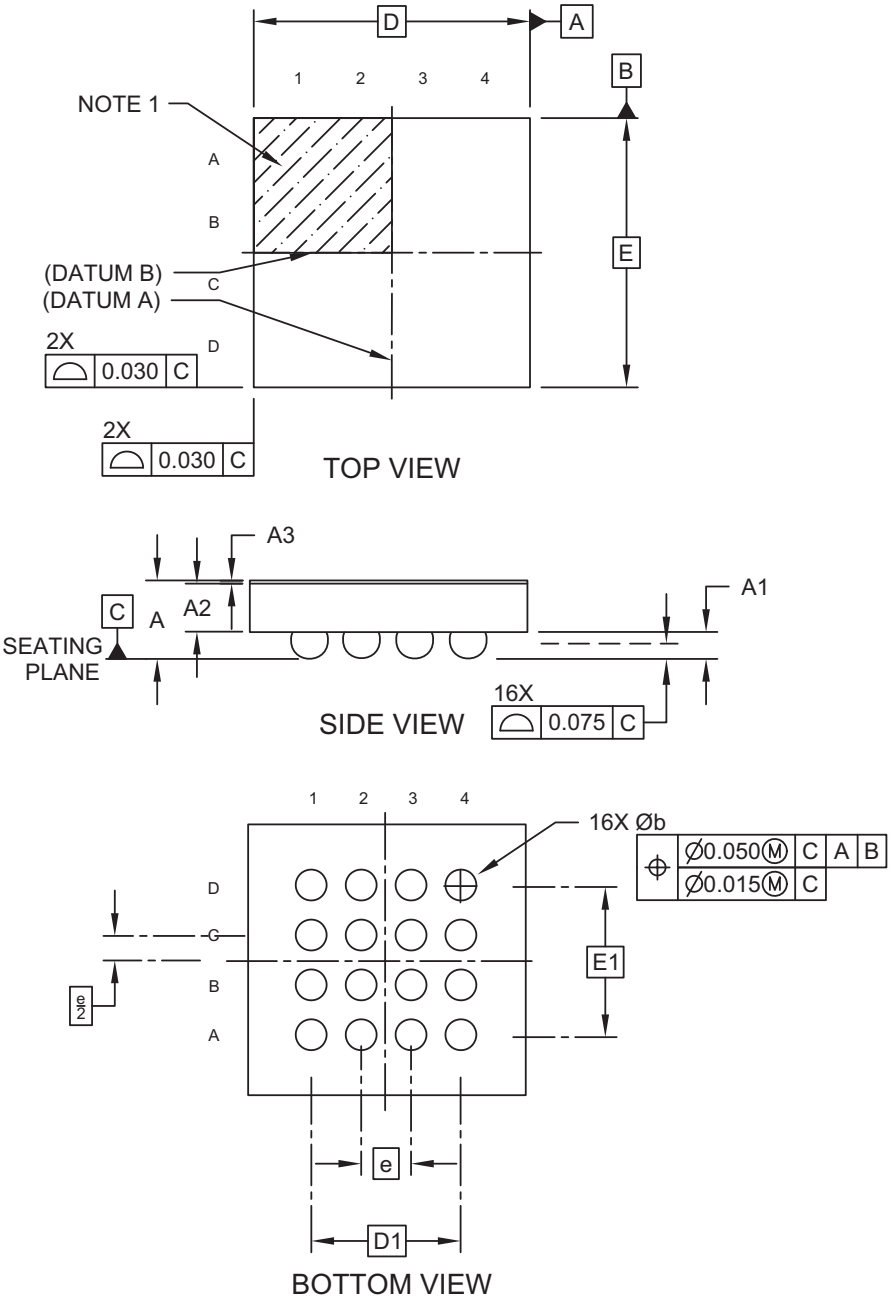

Microchip Technology Drawing C04-6040 Rev B Sheet 1 of 2

16-Ball Wafer Level Chip Scale Package (5SW) - 2.215x2.160x0.319 mm Body [WLCSP]

Note: For the most current package drawings, please see the Microchip Packaging Specification located at http://www.microchip.com/packaging

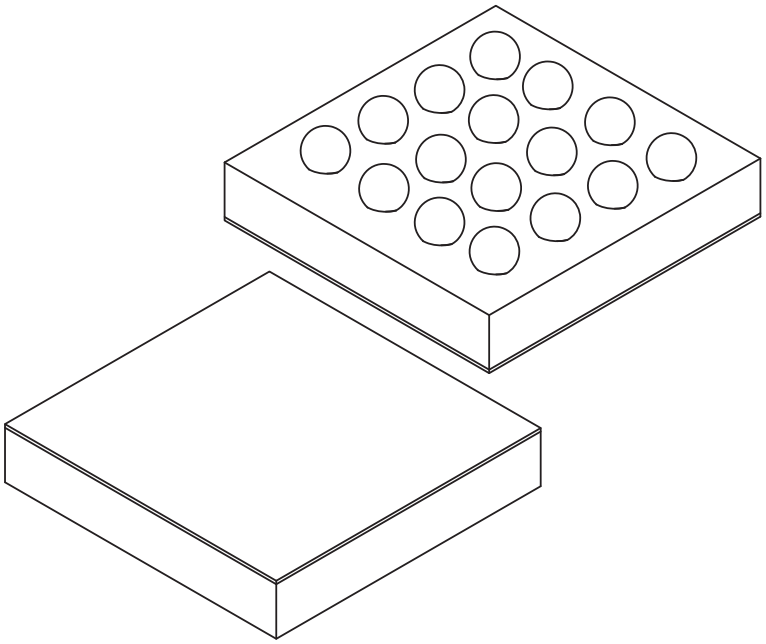

Units		MILLIMETERS		
Dimension Limits		MIN	NOM	MAX
Number of Terminals	N		16	
Pitch	e		0.40 BSC	
Overall Height	A	0.285	0.319	0.353
Standoff	A1	0.069	0.099	0.129
Die Thickness	A2	0.162	0.187	0.212
Backside Coating Thickness	A3	-	0.025	-
Ball Width	b	0.151	0.181	0.211
Overall Length	D		2.215 BSC	
Overall Width	E		2.160 BSC	
Edge Ball Center to Center Length	D1		1.200 BSC	
Edge Ball Center to Center Width	E1		1.200 BSC	

Notes:

1. Pin 1 visual index feature may vary, but must be located within the hatched area.
2. Dimensioning and tolerancing per ASME Y14.5M

   BSC: Basic Dimension. Theoretically exact value shown without tolerances.

   REF: Reference Dimension, usually without tolerance, for information purposes only.

Microchip Technology Drawing C04-6040 Rev B Sheet 2 of 2

© 2021-2025 Microchip Technology Inc. and its subsidiaries

16-Ball Wafer Level Chip Scale Package (5SW) - 2.215x2.160x0.319 mm Body [WLCSP] PAC1954

Note: For the most current package drawings, please see the Microchip Packaging Specification located at http://www.microchip.com/packaging

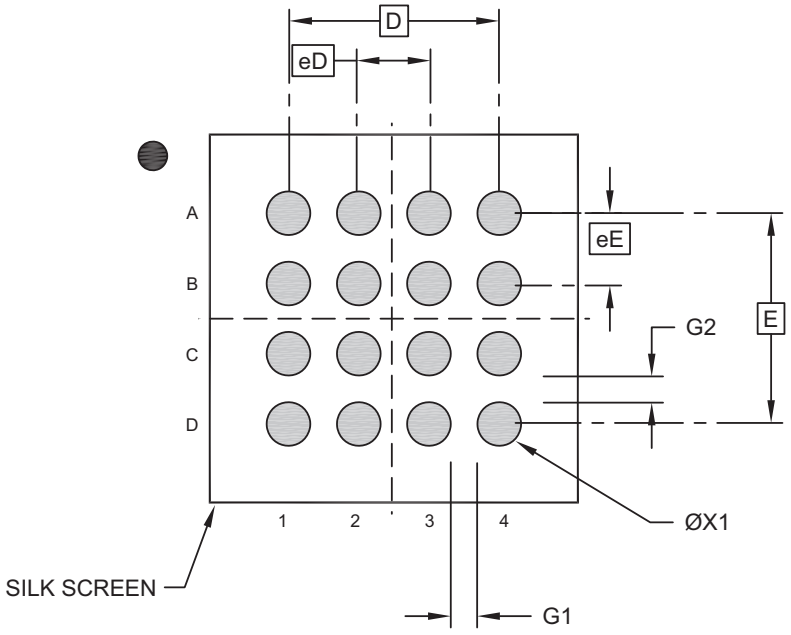

RECOMMENDED LAND PATTERN

Units		MILLIMETERS		
Dimension Limits		MIN	NOM	MAX
Contact Pitch	eD		0.40 BSC	
Contact Pitch	eE		0.40 BSC	
Overall Pitch	D1		1.20 BSC	
Overall Pitch	E1		1.20 BSC	
Space Between Contacts	G1		0.15	
Space Between Contacts	G2		0.15	
Contact Diameter	ØX1		0.18	

Notes:

1. Dimensioning and tolerancing per ASME Y14.5M
   BSC: Basic Dimension. Theoretically exact value shown without tolerances.
2. For best soldering results, thermal vias, if used, should be filled or tented to avoid solder loss during reflow process

Microchip Technology Drawing C04-8040 Rev. B

© 2021-2025 Microchip Technology Inc. and its subsidiaries

NOTES:

© 2021-2025 Microchip Technology Inc. and its subsidiaries

APPENDIX A: REVISION HISTORY

Revision F (June 2025)

Following are the changes made in this revision:

- Updated information throughout the document regarding 16-Ball 2.215 x 2.16 x 0.641 mm Body WLCSP (CS) packaging.
- Updated **Product Identification System** and **Product Identification System (Automotive)**.

Revision E (June 2024)

Following are the changes made in this revision:

- Updated section Features, *Available Packages* with 2.215 x 2.16 x 0.319 mm 16-Ball WLCSP.
- Updated section Package Types.
- Updated **Temperature Specifications**.
- Updated **Package Marking Information** with PAC1954T-E/5SW.
- Updated **Package Drawings** with 16-Ball WLCSP (5SW) drawings.
- Updated **Product Identification System** with 5SW information.
- Updated **Product Identification System (Automotive)**.

Revision D (June 2022)

Following are the changes made in this revision:

- Updated the V_{DD} Active Current (I_{DD}) parameter in the DC Electrical Characteristics table: I_{DD} at 1024 sps changed from 495 µA to 535 µA (max.) and I_{DD} at 8 sps changed from 25 µA to 130 µA (max.).

Revision C (May 2022)

Following are the changes made in this revision:

- Added the Automotive qualification in Features and Applications.

Revision B (March 2022)

Following are the changes made in this revision:

- Updated section Computing Platform Support.
- Updated Register 7-37.

Revision A (June 2021)

- Initial release of this document.

Note: The I^2C standard uses the terminology “Master” and “Slave”. The equivalent Microchip terminology used in this document is “Host” and “Client”, respectively.

© 2021-2025 Microchip Technology Inc. and its subsidiaries

PRODUCT IDENTIFICATION SYSTEM

To order or obtain information, e.g., on pricing or delivery, refer to the factory or the listed sales office.

PART NO.	X	-X	X	/XXX
Device	Tape and Reel	Device Option	Temperature Range	Package

Device:	PAC1951: Single-Channel Power Monitor, 32V Accumulator PAC1952: Dual-Channel Power Monitor, 32V Accumulator PAC1953: Three-Channel Power Monitor, 32V Accumulator PAC1954: Four-Channel Power Monitor, 32V Accumulator	
Tape and Reel:	T	= Tape and Reel
Device Option	1(2) 2(2)	= High-Side Power Monitor = Low-Side Power Monitor
Temperature Range:	E	= -40°C to +125°C (Extended)
Package:	4MX	= 16-Lead Very Thin Quad Flat, 3 x 3 x 0.9 mm (VQFN)
	J6CX	= 16-Ball Wafer Level Chip Scale Package, 2.215 x 2.16 x 0.641 mm (WLCSP)
	5SW	= 16-Ball Wafer Level Chip Scale Package, 2.215 x 2.16 x 0.319 mm (WLCSP)
Class:	(Blank)	= Non-Automotive
	VAO	= Automotive

Note 1: Tape and Reel identifier only appears in the catalog part number description. This identifier is used for ordering purposes and is not printed on the device package. Check with your Microchip Sales Office for package availability with the Tape and Reel option.

2: Only appears on single and dual-channel devices. Other devices are high-side power only.

Example:

a) PAC1951T-1E/4MX:	Single-Channel, Tape and Reel, High-Side Power Monitor, Extended Temperature, 16-Lead 3 x 3 x 0.9 mm VQFN
b) PAC1951T-2E/4MX:	Single-Channel, Tape and Reel, Low-Side Power Monitor, Extended Temperature, 16-Lead 3 x 3 x 0.9 mm VQFN
c) PAC1951T-1E/J6CX:	Single-Channel, Tape and Reel, High-Side Power Monitor, Extended Temperature, 16-Ball 2.215 x 2.16 x 0.641 mm WLCSP
d) PAC1951T-2E/J6CX:	Single-Channel, Tape and Reel, Low-Side Power Monitor, Extended Temperature, 16-Ball 2.215 x 2.16 x 0.641 mm WLCSP
a) PAC1952T-1E/4MX:	Single-Channel, Tape and Reel, High-Side Power Monitor, Extended Temperature, 16-Lead 3 x 3 x 0.9 mm VQFN
b) PAC1952T-2E/4MX:	Single-Channel, Tape and Reel, Low-Side Power Monitor, Extended Temperature, 16-Lead 3 x 3 x 0.9 mm VQFN
c) PAC1952T-1E/J6CX:	Single-Channel, Tape and Reel, High-Side Power Monitor, Extended Temperature, 16-Ball 2.215 x 2.16 x 0.641 mm WLCSP
d) PAC1952T-2E/J6CX:	Dual-Channel, Tape and Reel, Low-Side Power Monitor, Extended Temperature, 16-Ball 2.215 x 2.16 x 0.641 mm WLCSP
a) PAC1953T-E/4MX:	Three-Channel, Tape and Reel, High-Side Power Monitor, Extended Temperature, 16-Lead 3 x 3 x 0.9 mm VQFN
b) PAC1953T-E/J6CX:	Three-Channel, Tape and Reel, High-Side Power Monitor, Extended Temperature, 16-Ball 2.215 x 2.16 x 0.641 mm WLCSP
a) PAC1954T-E/4MX:	Four-Channel, Tape and Reel, High-Side Power Monitor, Extended Temperature, 16-Lead 3 x 3 x 0.9 mm VQFN
b) PAC1954T-E/J6CX:	Four-Channel, Tape and Reel, High-Side Power Monitor, Extended Temperature, 16-Ball 2.215 x 2.16 x 0.641 mm WLCSP
c) PAC1954T-E/5SW:	Four-Channel, Tape and Reel, High-Side Power Monitor, Extended Temperature, 16-Ball 2.215 x 2.16 x 0.319 mm WLCSP

© 2021-2025 Microchip Technology Inc. and its subsidiaries

PRODUCT IDENTIFICATION SYSTEM (AUTOMOTIVE)

To order or obtain information, e.g., on pricing or delivery, refer to the factory or the listed sales office.

PART NO.	X	-X	X	/XXX	/XXX
Device	Tape and Reel	Device Option	Temperature Range	Package	Class

Device:	PAC1951: Single-Channel Power Monitor, 32V Accumulator PAC1952: Dual-Channel Power Monitor, 32V Accumulator PAC1953: Three-Channel Power Monitor, 32V Accumulator PAC1954: Four-Channel Power Monitor, 32V Accumulator	
Tape and Reel:	T	= Tape and Reel
Device Option	1(2) 2(2)	= High-Side Power Monitor = Low-Side Power Monitor
Temperature Range:	E	= -40°C to +125°C (Extended)
Package:	4MX	= 16-Lead Very Thin Quad Flat, 3 x 3 x 0.9 mm (VQFN)
	J6CX	= 16-Ball Wafer Level Chip Scale Package, 2.215 x 2.16 x 0.641 mm (WLCSP)
	5SW	= 16-Ball Wafer Level Chip Scale Package, 2.215 x 2.16 x 0.319 mm (WLCSP)
Class:	(Blank) VAO	= Non-Automotive = Automotive

Note 1: Tape and Reel identifier only appears in the catalog part number description. This identifier is used for ordering purposes and is not printed on the device package. Check with your Microchip Sales Office for package availability with the Tape and Reel option.

2: Only appears on single and dual-channel devices. Other devices are high-side power only.

Example:

a) PAC1951T-1E/4MXVAO: Single-Channel, Tape and Reel, High-Side Power Monitor, Extended Temperature, 16-Lead 3 x 3 x 0.9 mm VQFN, Automotive

b) PAC1951T-2E/4MXVAO: Single-Channel, Tape and Reel, Low-Side Power Monitor, Extended Temperature, 16-Lead 3 x 3 x 0.9 mm VQFN, Automotive

c) PAC1952T-1E/4MXVAO: Dual-Channel, Tape and Reel, High-Side Power Monitor, Extended Temperature, 16-Lead 3 x 3 x 0.9 mm VQFN, Automotive

d) PAC1952T-2E/4MXVAO: Dual-Channel, Tape and Reel, Low-Side Power Monitor, Extended Temperature, 16-Lead 3 x 3 x 0.9 mm VQFN, Automotive

e) PAC1953T-E/4MXVAO: Three-Channel, Tape and Reel, High-Side Power Monitor, Extended Temperature, 16-Lead 3 x 3 x 0.9 mm VQFN, Automotive

f) PAC1954T-E/4MXVAO: Four-Channel, Tape and Reel, High-Side Power Monitor, Extended Temperature, 16-Lead 3 x 3 x 0.9 mm VQFN, Automotive

© 2021-2025 Microchip Technology Inc. and its subsidiaries

Microchip Information

Trademarks

The “Microchip” name and logo, the “M” logo, and other names, logos, and brands are registered and unregistered trademarks of Microchip Technology Incorporated or its affiliates and/or subsidiaries in the United States and/or other countries (“Microchip Trademarks”). Information regarding Microchip Trademarks can be found at https://www.microchip.com/en-us/about/legal-information/microchip-trademarks.

ISBN: 979-8-3371-1431-6

Legal Notice

This publication and the information herein may be used only with Microchip products, including to design, test, and integrate Microchip products with your application. Use of this information in any other manner violates these terms. Information regarding device applications is provided only for your convenience and may be superseded by updates. It is your responsibility to ensure that your application meets with your specifications. Contact your local Microchip sales office for additional support or, obtain additional support at www.microchip.com/en-us/support/design-help/client-support-services.

THIS INFORMATION IS PROVIDED BY MICROCHIP "AS IS". MICROCHIP MAKES NO REPRESENTATIONS OR WARRANTIES OF ANY KIND WHETHER EXPRESS OR IMPLIED, WRITTEN OR ORAL, STATUTORY OR OTHERWISE, RELATED TO THE INFORMATION INCLUDING BUT NOT LIMITED TO ANY IMPLIED WARRANTIES OF NON-INFRINGEMENT, MERCHANTABILITY, AND FITNESS FOR A PARTICULAR PURPOSE, OR WARRANTIES RELATED TO ITS CONDITION, QUALITY, OR PERFORMANCE.

IN NO EVENT WILL MICROCHIP BE LIABLE FOR ANY INDIRECT, SPECIAL, PUNITIVE, INCIDENTAL, OR CONSEQUENTIAL LOSS, DAMAGE, COST, OR EXPENSE OF ANY KIND WHATSOEVER RELATED TO THE INFORMATION OR ITS USE, HOWEVER CAUSED, EVEN IF MICROCHIP HAS BEEN ADVISED OF THE POSSIBILITY OR THE DAMAGES ARE FORESEEABLE. TO THE FULLEST EXTENT ALLOWED BY LAW, MICROCHIP'S TOTAL LIABILITY ON ALL CLAIMS IN ANY WAY RELATED TO THE INFORMATION OR ITS USE WILL NOT EXCEED THE AMOUNT OF FEES, IF ANY, THAT YOU HAVE PAID DIRECTLY TO MICROCHIP FOR THE INFORMATION.

Use of Microchip devices in life support and/or safety applications is entirely at the buyer's risk, and the buyer agrees to defend, indemnify and hold harmless Microchip from any and all damages, claims, suits, or expenses resulting from such use. No licenses are conveyed, implicitly or otherwise, under any Microchip intellectual property rights unless otherwise stated.

Microchip Devices Code Protection Feature

Note the following details of the code protection feature on Microchip products:

- Microchip products meet the specifications contained in their particular Microchip Data Sheet.
- Microchip believes that its family of products is secure when used in the intended manner, within operating specifications, and under normal conditions.
- Microchip values and aggressively protects its intellectual property rights. Attempts to breach the code protection features of Microchip product is strictly prohibited and may violate the Digital Millennium Copyright Act.
- Neither Microchip nor any other semiconductor manufacturer can guarantee the security of its code. Code protection does not mean that we are guaranteeing the product is “unbreakable”. Code protection is constantly evolving. Microchip is committed to continuously improving the code protection features of our products.

ENTEGRECİ

Bu belge www.entegreci.com üzerinden sunulmaktadır.

Elektronik komponent tedarikinde Entegreci

Entegreci, Eskişehir merkezli, Türkiye geneline satış yapan bir elektronik komponent mağazasıdır. Entegreler (IC), mikrodenetleyiciler, transistörler, diyotlar, pasif elemanlar, konnektörler, modüller ve geliştirme kartları tek adetten seri üretim adetlerine kadar satılır. Ürün sayfalarında güncel stok durumunu, fiyatı ve datasheet bağlantısını bulabilirsiniz.

Parça koduyla arama

Üretici parça numarasını yazın; stok ve fiyatı hemen görün.

www.entegreci.com

Ürün kategorileri

Entegreden kapasitöre tüm elektronik komponent kategorileri.

Kategorilere göz atın

Üreticiler

Aradığınız üreticinin ürünlerini tek sayfada inceleyin.

Üreticileri görün

Toplu alım ve teklif

Listede olmayan ya da yüksek adetli parçalar için teklif isteyin.

Teklif isteyin

www.entegreci.com | **destek@entegreci.com** | **0850 305 90 34**

Entegreci is an online electronic components store based in Türkiye. Search by manufacturer part number to see stock, prices and datasheets for integrated circuits, microcontrollers, transistors, passive components and connectors, or request a quote for parts that are not listed.

Bu sayfa Entegreci tarafından eklenmiştir. Belgenin önceki sayfaları asıl yayıncısına aittir ve içeriği değiştirilmemiştir; en güncel sürüm için belgenin yayıncısına başvurun.