Voltage Regulator – Low Dropout, Ultra Low Noise

150 mA

NCP623, NCV8623

The NCP623/NCV8623 low dropout linear regulator can deliver up to 150 mA of output current with a typical dropout voltage of 180 mV. This low dropout feature helps to maintain a regulated output voltage for a longer period of time as the lifetime of the battery decreases.

It is the ideal choice for noise sensitive environments like portable applications where noise performance and space are at a premium. The typical output noise voltage specification is 25 μV_{RMS}. An additional noise saving feature of this device is its ability to filter choppy signals on the power supply by providing a typical DC ripple rejection of −90 dB and −70 dB at 1.0 kHz.

The NCP623 is designed to work with very low ESR capacitors such as ceramic capacitors which are common in the industry now.

Additional features such as thermal shutdown and short−circuit protection provide for a robust system design.

Features

- Very Low Quiescent Current 170 μA (ON, no load), 100 nA (OFF, no load)
- Very Low Dropout Voltage, Typical Value is 137 mV at an Output Current of 100 mA
- Very Low Noise with External Bypass Capacitor (10 nF), Typically 25 μV_{RMS} over 100 Hz to 100 kHz
- Internal Thermal Shutdown
- Extremely Tight Line Regulation Typically −90 dB
- Ripple Rejection −70 dB @ 1.0 kHz
- Line Transient Response: 1.0 mV for ΔV_{in} = 3.0 V
- Extremely Tight Load Regulation, Typically 20 mV at ΔI_{out} = 150 mA
- Multiple Output Voltages Available
- Logic Level ON/OFF Control (TTL−CMOS Compatible)
- Output Capacitor ESR Can Vary from 0 Ω to 3.0 Ω
- NCV Prefix for Automotive and Other Applications Requiring Unique Site and Control Change Requirements; AEC−Q100 Qualified and PPAP Capable
- These Devices are Pb−Free, Halogen Free/BFR Free and are RoHS Compliant

Applications

- All Portable Systems, Battery Powered Systems, Cellular Telephones, Radio Control Systems, Toys and Low Voltage Systems



DFN6, 3X3
MN SUFFIX
CASE 488AE

PIN CONNECTIONS

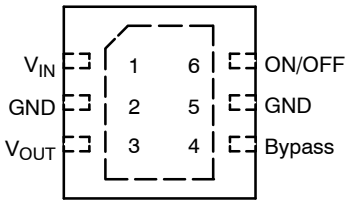

(Top View)

MARKING DIAGRAM



XXXXX = Device Code
NCP623yy for NCP623
NCV8623yyfor NCV8623
yy = 25, 28, 30, 33, 40 or 50
A = Assembly Location
L = Wafer Lot
Y = Year
W = Work Week
▪ = Pb Free Package

(Note: Microdot may be in either location)

ORDERING INFORMATION

See detailed ordering and shipping information on page 14 of this data sheet.

NOTE: Some of the devices on this data sheet have been **DISCONTINUED**. Please refer to the table on page 14.

© Semiconductor Components Industries, LLC, 2015

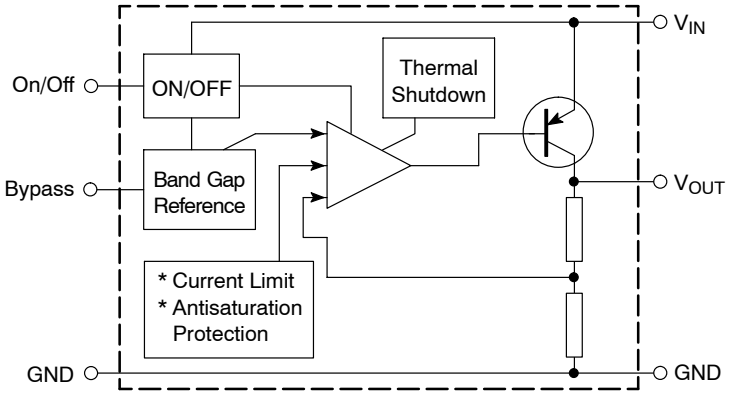

Figure 1. NCP623/NCV8623 Block Diagram

MAXIMUM RATINGS

Symbol	Rating	Value	Unit
V_{in}	Power Supply Voltage	12	V
P_D	Power Dissipation and Thermal Resistance Maximum Power Dissipation Case 488AE (DFN6, 3x3) MN Suffix	Internally Limited	W
$R_{\theta JA}$ **psi−JC* or Ψ_{JC}	Thermal Resistance, Junction−to−Air Thermal Resistance, Junction−to−Case	161 13	°C/W
T_A	Operating Ambient Temperature Range NCP623 NCV8623	−40 to +85 −40 to +125	°C
T_{Jmax}	Maximum Junction Temperature	150	°C
T_{stg}	Storage Temperature Range	−60 to +150	°C
V_{ESD}	ESD Protection − Human Body Model − Machine Model	2000 200	V

Stresses exceeding those listed in the Maximum Ratings table may damage the device. If any of these limits are exceeded, device functionality should not be assumed, damage may occur and reliability may be affected.

*"C" ("case") is defined as the solder−attach interface between the center of the exposed pad on the bottom of the package, and the board to which it is attached.

** Refer to the JEDEC Specs (51−2, 51−6).

ELECTRICAL CHARACTERISTICS (For typical values T_A = 25°C, for min/max values; T_A = −40°C to +85°C for NCP623 and T_A = −40°C to +125°C for NCV8623, Max T_J = 150°C)

Symbol	Characteristics	Min	Typ	Max	Unit
CONTROL ELECTRICAL CHARACTERISTICS					
$V_{ON/OFF}$	Input Voltage Range	2.5	–	V_{in}	V
$I_{ON/OFF}$	ON/OFF Input Current (All versions) $V_{ON/OFF}$ = 2.4 V	–	2.5	–	μA
$V_{ON/OFF}$	ON/OFF Input Voltages (All versions) Logic “0”, i.e. OFF State Logic “1”, i.e. ON State	– 2.2	– –	0.3 –	V
CURRENTS PARAMETERS					
IQ_{OFF}	Current Consumption in OFF State (All versions) OFF Mode Current: V_{IN} = V_{out} +1.0 V, I_{out} = 0 mA	–	0.1	2.0	μA
IQ_{ON}	Current Consumption in ON State (All versions) ON Mode Sat Current: V_{in} = V_{out} + 1.0 V, I_{out} = 0 mA	–	170	200	μA
IQ_{SAT}	Current Consumption in Saturation ON State (All versions) ON Mode Sat Current: V_{IN} = 2.5 V or V_{in} = V_{out} − 0.4 V (Whichever is Higher), I_{out} = 0 mA	–	900	1400	μA
I_{MAX}	Current Limit V_{in} = V_{out} + 1.0 V, (All versions) (Note 1)	175	210	–	mA
V_{out}	V_{in} = V_{out} + 1.0 V, T_A = 25°C, 1.0 mA < I_{out} < 150 mA 2.5 Suffix 2.8 Suffix 3.0 Suffix 3.3 Suffix 4.0 Suffix 4.5 Suffix 5.0 Suffix	 2.45 2.74 2.94 3.23 3.92 4.41 4.90	 2.5 2.8 3.0 3.3 4.0 4.5 5.0	 2.55 2.86 3.06 3.37 4.08 4.59 5.1	V
V_{out}	V_{in} = V_{out} + 1.0 V, −40°C < T_A < 85°C, 1.0 mA < I_{out} < 150 mA 2.5 Suffix 2.8 Suffix 3.0 Suffix 3.3 Suffix 4.0 Suffix 4.5 Suffix 5.0 Suffix	 2.41 2.70 2.89 3.18 3.86 4.34 4.83	 2.5 2.8 3.0 3.3 4.0 4.5 5.0	 2.59 2.90 3.11 3.42 4.14 4.66 5.17	V
LINE AND LOAD REGULATION, DROPOUT VOLTAGES					
Reg_{line}	Line Regulation (All versions) V_{out} + 1.0 V < V_{in} < 12 V, I_{out} = 60 mA	–	2.0	10	mV
Reg_{load}	Load Regulation (All versions) V_{in} = V_{out} + 1.0 V I_{out} = 1.0 to 60 mA I_{out} = 1.0 to 100 mA I_{out} = 1.0 to 150 mA	 – – –	 8.0 15 20	 25 35 45	mV
V_{in} − V_{out}	Dropout Voltage (All versions) I_{out} = 10 mA I_{out} = 100 mA I_{out} = 150 mA	 – – –	 30 137 180	 90 230 260	mV
DYNAMIC PARAMETERS					
	Ripple Rejection (All versions) V_{in} = V_{out} + 1.0 V, V_{pp} = 1.0 V, f = 1.0 kHz, I_{out} = 60 mA	60	70	–	dB
	Line Transient Response V_{in} = V_{out} + 1.0 V to V_{out} + 4.0 V, I_{out} = 60 mA, d(V_{in})/dt = 15 mV/μs	–	1.0	–	mV
V_{RMS}	Output Noise Voltage (All versions) C_{out} = 1.0 μF, I_{out} = 60 mA, f = 100 Hz to 100 kHz C_{bypass} = 10 nF C_{bypass} = 1.0 nF C_{bypass} = 0 nF	 – – –	 25 40 65	 – – –	μVrms
V_N	Output Noise Density C_{out} = 1.0 μF, I_{out} = 60 mA, f = 1.0 kHz	–	230	–	nV/√Hz

ELECTRICAL CHARACTERISTICS (For typical values T_A = 25°C, for min/max values; T_A = −40°C to +85°C for NCP623 and T_A = −40°C to +125°C for NCV8623, Max T_J = 150°C) (continued)

Symbol	Characteristics	Min	Typ	Max	Unit
DYNAMIC PARAMETERS					
t_r	Output Rise Time (All versions) C_{out} = 1.0 μF, I_{out} = 30 mA, $V_{ON/OFF}$ = 0 to 2.4 V 1% of ON/OFF Signal to 99% of Nominal Output Voltage Without Bypass Capacitor With C_{bypass} = 10 nF	 – –	 40 1.1	 – –	 μs ms
THERMAL SHUTDOWN					
	Thermal Shutdown (All versions)	–	150	–	°C

Product parametric performance is indicated in the Electrical Characteristics for the listed test conditions, unless otherwise noted. Product performance may not be indicated by the Electrical Characteristics if operated under different conditions.

1. I_{MAX} (Output Current Limit) is the current measured when the output voltage drops below 0.3 V with respect to V_{out} at I_{out} = 30 mA.

DEFINITIONS

Load Regulation – The change in output voltage for a change in load current at constant chip temperature.

Dropout Voltage – The input/output differential at which the regulator output no longer maintains regulation against further reductions in input voltage. Measured when the output drops 100 mV below its nominal value (which is measured at 1.0 V differential), dropout voltage is affected by junction temperature, load current and minimum input supply requirements.

Output Noise Voltage – The RMS AC voltage at the output with a constant load and no input ripple, measured over a specified frequency range.

Maximum Power Dissipation – The maximum total dissipation for which the regulator will operate within specifications.

Quiescent Current – Current which is used to operate the regulator chip and is not delivered to the load.

Line Regulation – The change in input voltage for a change in the input voltage. The measurement is made under conditions of low dissipation or by using pulse techniques such that the average chip temperature is not significantly affected.

Line Transient Response – Typical over– and undershoot response when input voltage is excited with a given slope.

Thermal Protection – Internal thermal shutdown circuitry is provided to protect the integrated circuit in the event that the maximum junction temperature is exceeded. When activated, typically 150°C, the regulator turns off. This feature is provided to prevent catastrophic failures from accidental overheating.

Maximum Package Power Dissipation – The maximum package power dissipation is the power dissipation level at which the junction temperature reaches its maximum value i.e. 125°C. The junction temperature is rising while the difference between the input power (V_{CC} X I_{CC}) and the output power (V_{out} X I_{out}) is increasing.

Depending on ambient temperature, it is possible to calculate the maximum power dissipation, maximum load current or maximum input voltage (see Application Hints: Protection).

The maximum power dissipation supported by the device is a lot increased when using appropriate application design. Mounting pad configuration on the PCB, the board material and also the ambient temperature are affected the rate of temperature rise. It means that when the I_C has good thermal conductivity through PCB, the junction temperature will be “low” even if the power dissipation is great.

The thermal resistance of the whole circuit can be evaluated by deliberately activating the thermal shutdown of the circuit (by increasing the output current or raising the input voltage for example).

Then you can calculate the power dissipation by subtracting the output power from the input power. All variables are then well known: power dissipation, thermal shutdown temperature (150°C for NCP623) and ambient temperature.

APPLICATION HINTS

Input Decoupling – As with any regulator, it is necessary to reduce the dynamic impedance of the supply rail that feeds the component. A 1.0 μF capacitor either ceramic or tantalum is recommended and should be connected close to the NCP623 package. Higher values will correspondingly improve the overall line transient response.

Output Decoupling – Output capacitors exhibiting ESRs ranging from a few mΩ up to 3.0 Ω can safely be used. The minimum decoupling value is 1.0 μF and can be augmented to fulfill stringent load transient requirements. The regulator works with ceramic chip capacitors as well as tantalum devices.

Noise Performances – Unlike other LDOs, the NCP623 is a true low−noise regulator. With a 10 nF bypass capacitor, it typically reaches 25 μVRMS overall noise between 100 Hz and 100 kHz. Spectral density graphics as well as noise dependency versus bypass capacitor information is included in this datasheet.

The bypass capacitor impacts the startup phase of the NCP623 as depicted by the data−sheet curves. A typical 1.0 ms settling time is achieved with a 10 nF bypass capacitor. However, due to its low−noise architecture, the NCP623 can operate without bypass and thus offers a typical 20 μs startup phase. In that case, the typical output noise stays lower than 65 μVRMS between 100 Hz – 100 kHz.

Protections – The NCP623 includes several protections functions. The output current is internally limited to a minimum of 175 mA while temperature shutdown occurs if the die heats up beyond 150°C. These value lets you assess the maximum differential voltage the device can sustain at a given output current before its protections come into play.

The maximum dissipation the package can handle is given by:

$$P_{max} = \frac{T_{Jmax} - T_A}{R_{\theta JA}}$$

If T_{Jmax} is internally limited to 150°C, then the NCP623 can dissipate up to 595 mW @ 25°C.

The power dissipated by the NCP623 can be calculated from the following formula:

$$Ptot = \langle V_{in} \cdot I_{gnd}(I_{out}) \rangle + \langle V_{in} - V_{out} \rangle \cdot I_{out}$$

or

$$Vin_{max} = \frac{Ptot + V_{out} \cdot I_{out}}{I_{gnd} + I_{out}}$$

If a 150 mA output current is needed, the ground current is extracted from the data−sheet curves: 6.5 mA @ 150 mA. For a NCP623NW28R2 (2.8 V), the maximum input voltage will then be 6.48 V, a rather comfortable margin.

Typical Application – The following figure portraits the typical application for the NCP623 where both input/output decoupling capacitors appear.

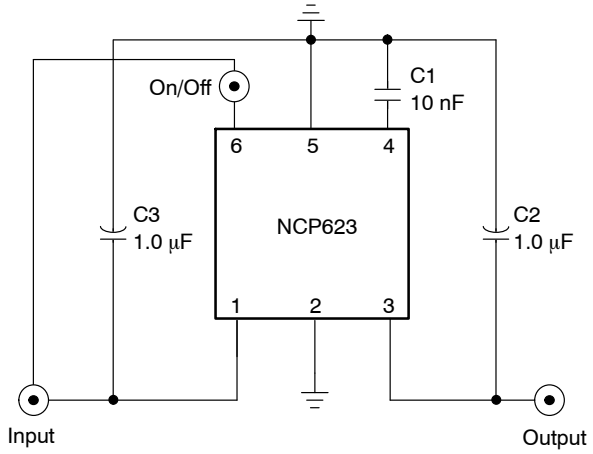

Figure 2. A Typical NCP623 Application with Recommended Capacitor Values

NCP623 Wake−up Improvement − In portable applications, an immediate response to an enable signal is vital. If noise is not a concern, the NCP623 without a bypass capacitor settles in nearly 20 μs and typically delivers 65 μVRMS between 100 Hz and 100 kHz.

In ultra low−noise systems, the designer needs a 10 nF bypass capacitor to decrease the noise down to 25 μVRMS between 100 Hz and 100 kHz. With the addition of the 10 nF capacitor, the wake−up time expands up to 1.0 ms as shown on the data−sheet curves. If an immediate response is wanted, Figure 3 provides a solution to charge the bypass capacitor with the enable signal without degrading the noise response of the NCP623.

At power−on, C4 is discharged. When the control logic sends its wake−up signal by going high, the PNP base is momentarily tied to ground. The PNP switch closes and immediately charges the bypass capacitor C1 toward its operating value. After a few μs, the PNP opens and becomes totally transparent to the regulator.

This circuit improves the response time of the regulator which drops from 1.0 ms down to 30 μs. The value of C4 needs to be tweaked in order to avoid any bypass capacitor overload during the wake−up transient.

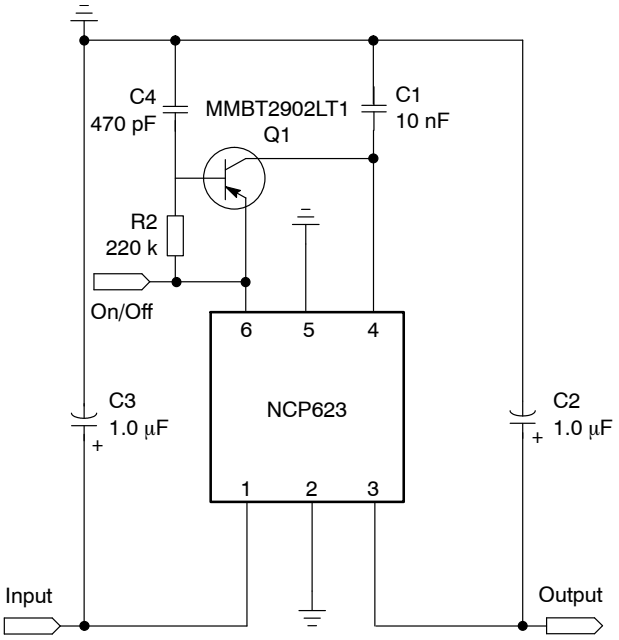

Figure 3. A PNP Transistor Drives the Bypass Pin when Enable Goes High

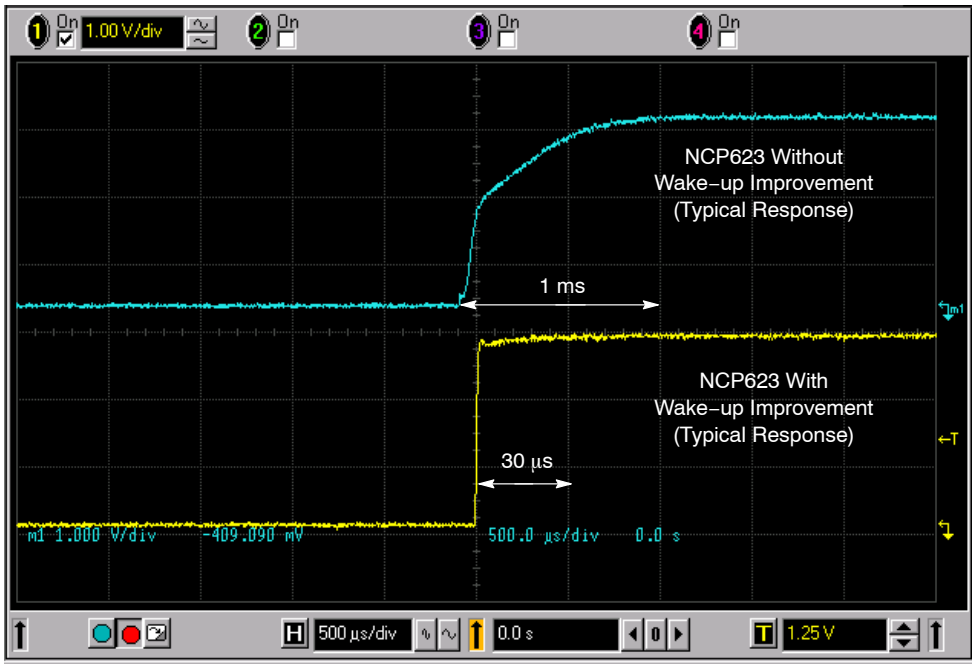

Figure 4. NCP623 Wake−up Improvement with Small PNP Transistor

The PNP connected to the bypass pin does not degrade the noise response of the NCP623. Figure 5 displays the noise density using the setup in Figure 3. The typical noise level is 26 μV_{RM} (100 Hz to 25 kHz) at I_{OUT} = 60 mA.

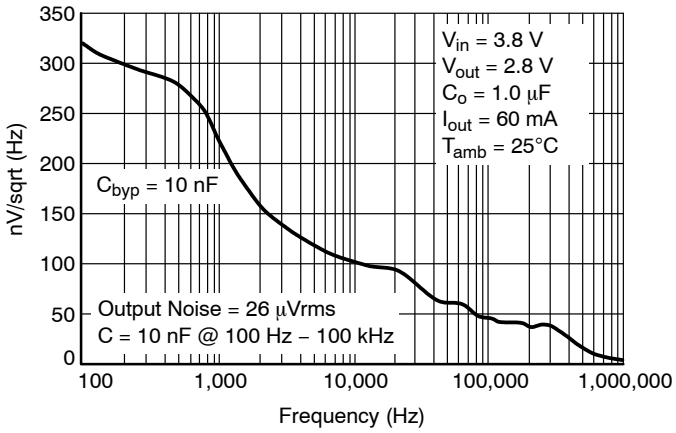

Figure 5. Noise Density of the NCP623 with a 10 nF Bypass Capacitor and a Wake−up Improvement Network

TYPICAL PERFORMANCE CHARACTERISTICS

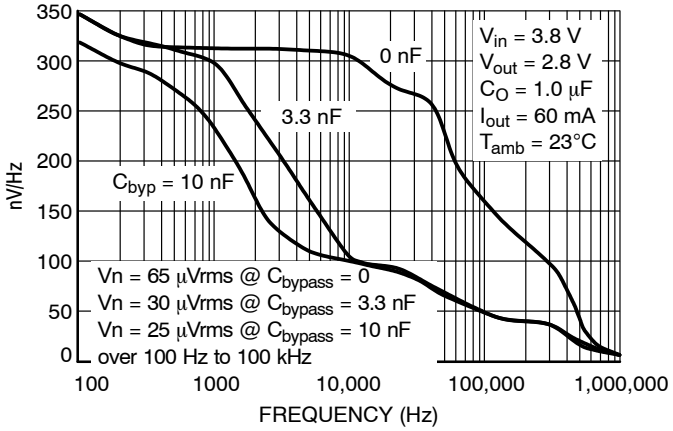

Figure 6. Noise Density versus Bypass Capacitor

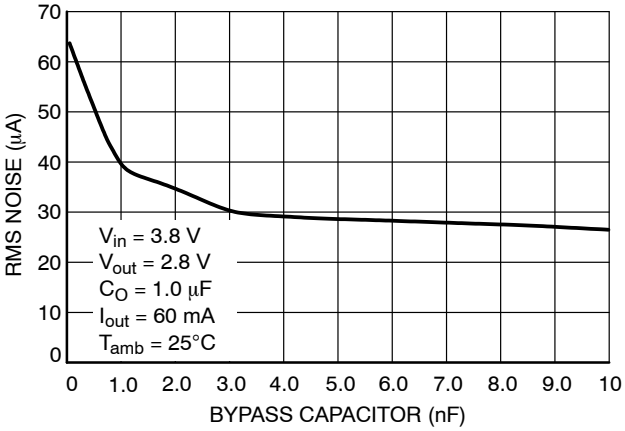

Figure 7. RMS Noise versus Bypass Capacitor (100 Hz – 100 kHz)

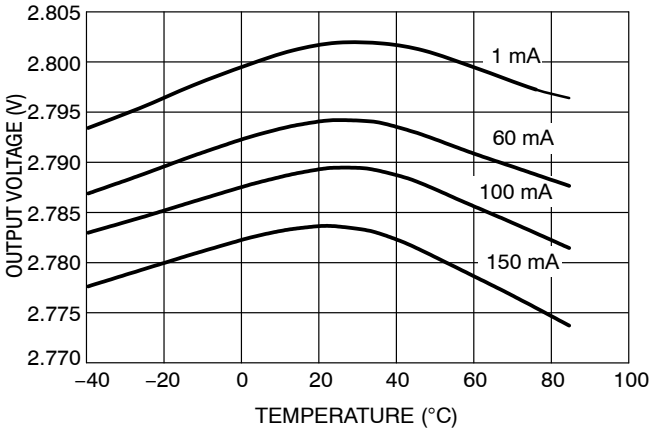

Figure 8. Output Voltage (2.8 V) versus Temperature

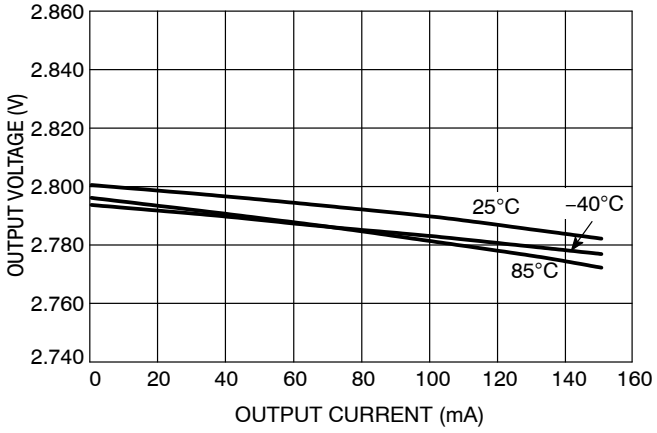

Figure 9. Output Voltage (2.8 V) versus I_{out}

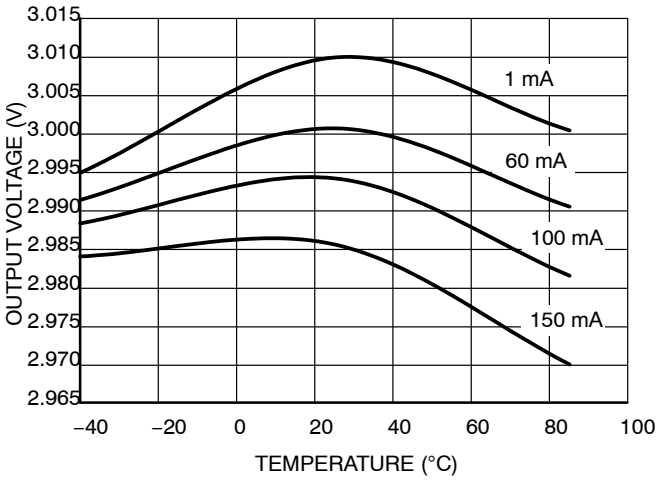

Figure 10. Output Voltage (3.0 V) versus Temperature

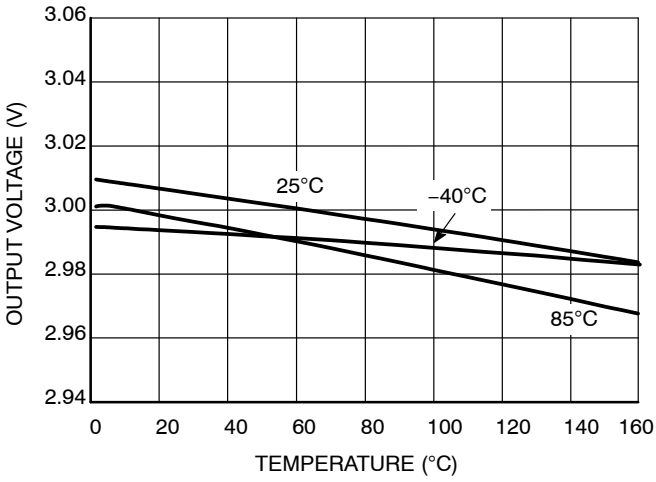

Figure 11. Output Voltage (3.0 V) versus I_{out}

TYPICAL PERFORMANCE CHARACTERISTICS

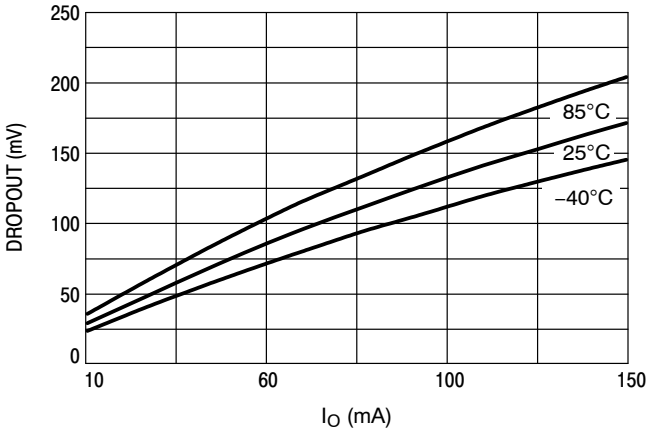

Figure 12. Dropout Voltage versus I_{out}

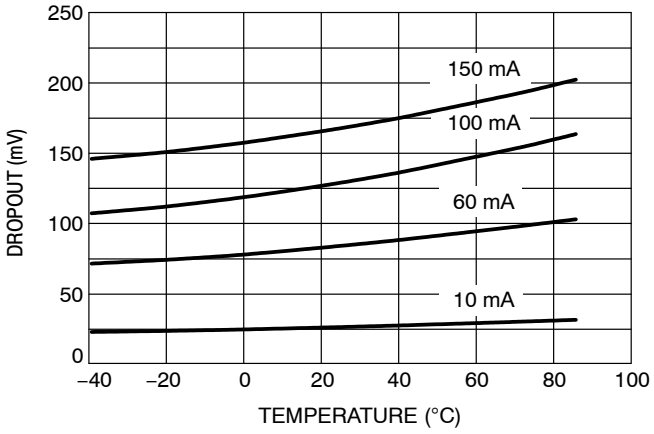

Figure 13. Dropout Voltage versus Temperature

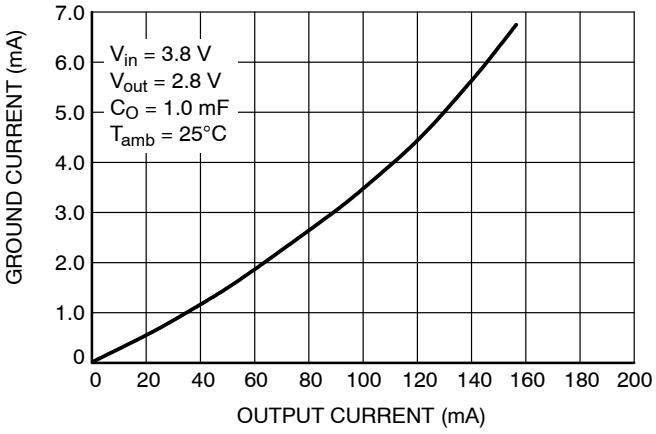

Figure 14. Ground Current versus Output Current

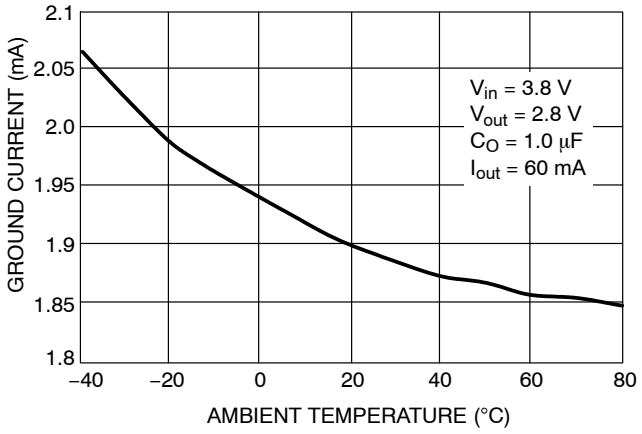

Figure 15. Ground Current versus Ambient Temperature

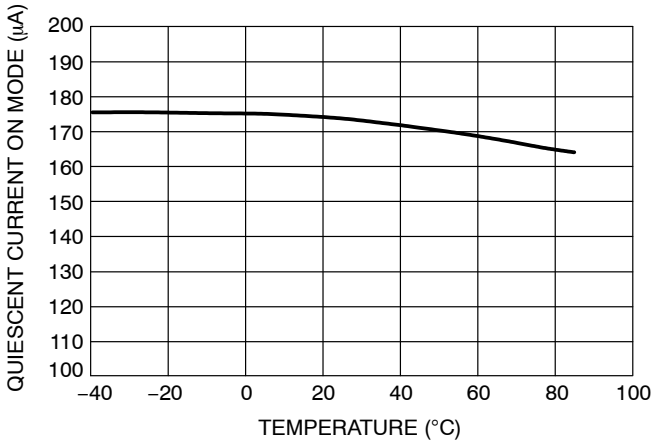

Figure 16. Quiescent Current versus Temperature

TYPICAL PERFORMANCE CHARACTERISTICS

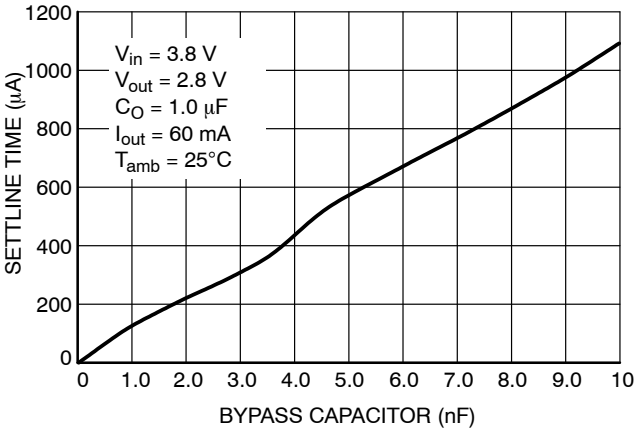

Figure 17. Output Voltage Settling Time versus Bypass Capacitor

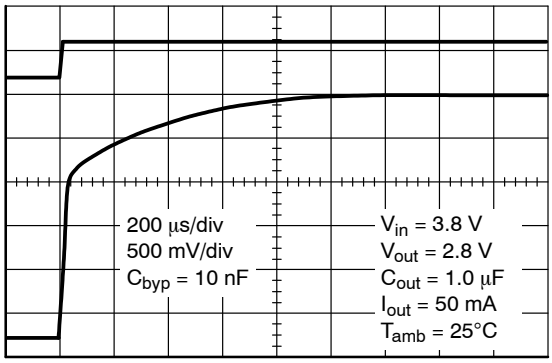

Figure 18. Output Voltage Settling Shape C_{bypass} = 10 nF

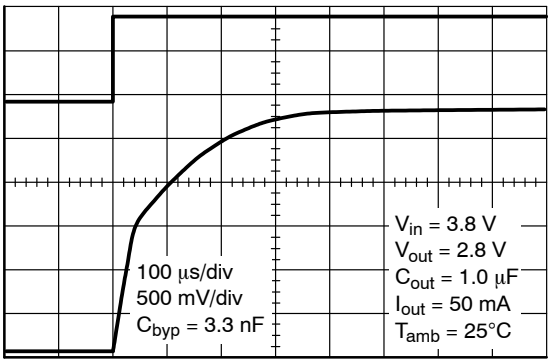

Figure 19. Output Voltage Settling Shape C_{bypass} = 3.3 nF

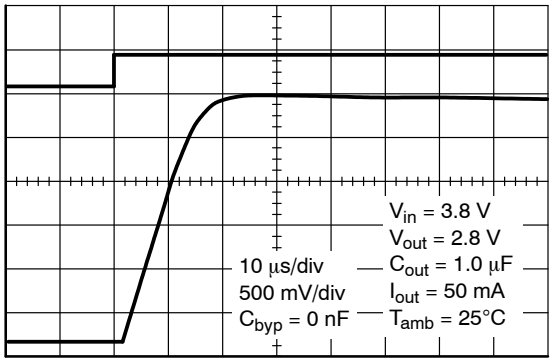

Figure 20. Output Voltage Settling Shape without Bypass Capacitor

TYPICAL PERFORMANCE CHARACTERISTICS

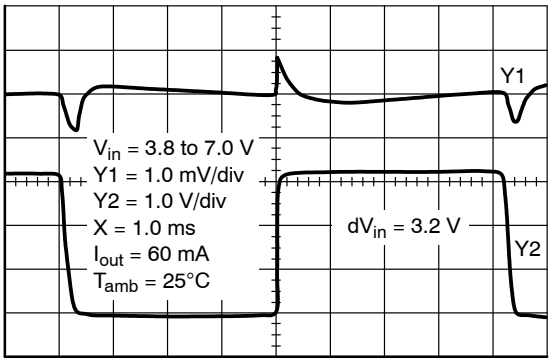

Figure 21. Line Transient Response

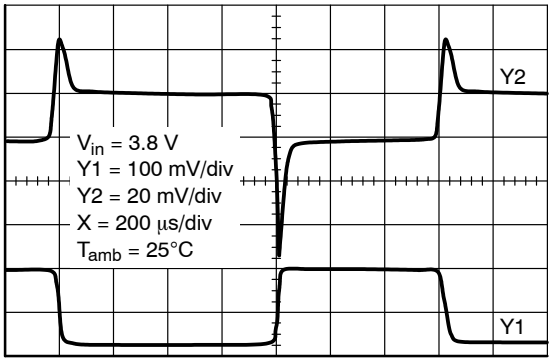

Y1: OUTPUT CURRENT, Y2: OUTPUT VOLTAGE

Figure 22. I_{out} = 3.0 mA to 150 mA

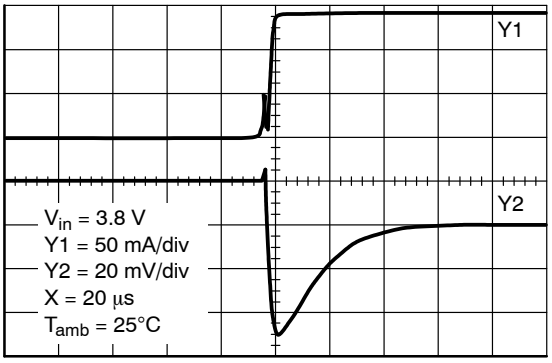

Y1: OUTPUT CURRENT, Y2: OUTPUT VOLTAGE

Figure 23. I_{Slope} = 100 mA/μs (Large Scale) I_{out} = 3.0 mA to 150 mA

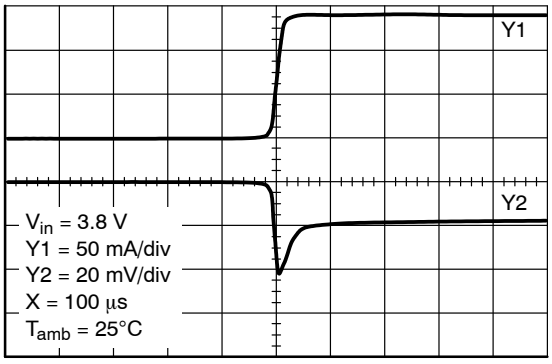

Y1: OUTPUT CURRENT, Y2: OUTPUT VOLTAGE

Figure 24. I_{Slope} = 6.0 mA/μs (Large Scale) I_{out} = 3.0 mA to 150 mA

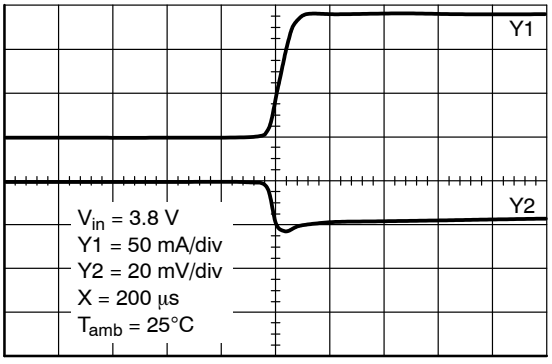

Y1: OUTPUT CURRENT, Y2: OUTPUT VOLTAGE

Figure 25. I_{Slope} = 2.0 mA/μs (Large Scale) I_{out} = 3.0 mA to 150 mA

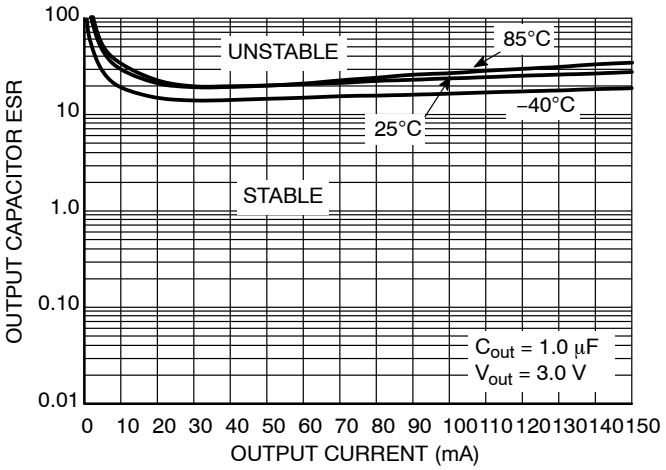

Figure 26. Output Stability versus Output Current Over Temperature (1.0 μF, 3.0 V)

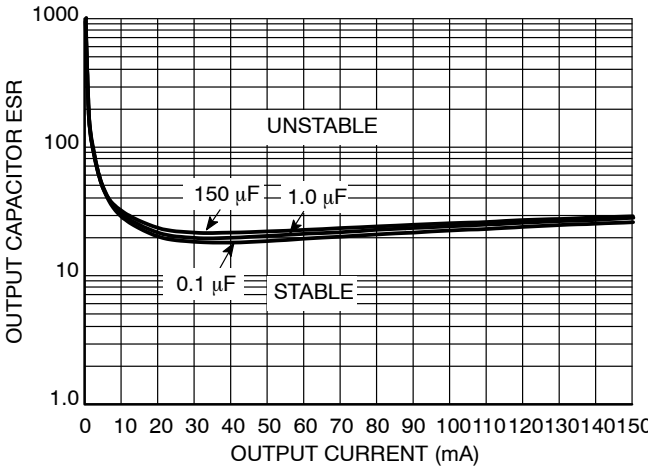

Figure 27. Output Stability with Output Capacitor Change

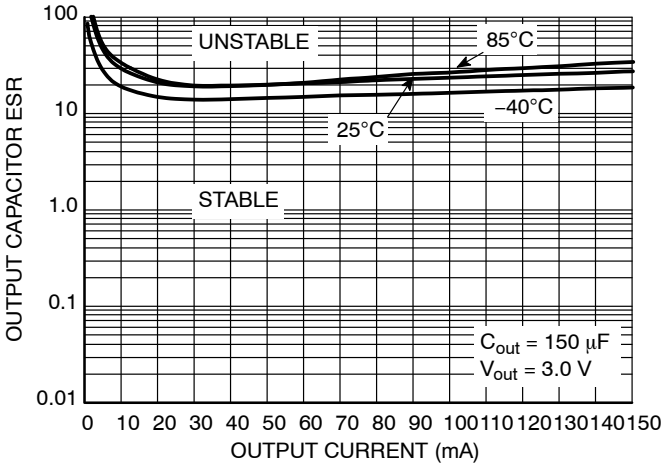

Figure 28. Output Stability versus Output Current Over Temperature (150 μF, 3.0 V)

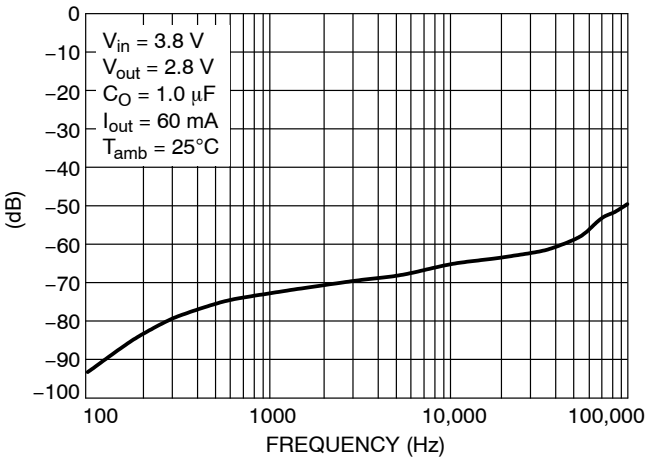

Figure 29. Ripple Rejection versus Frequency with 10 nF Bypass Capacitor

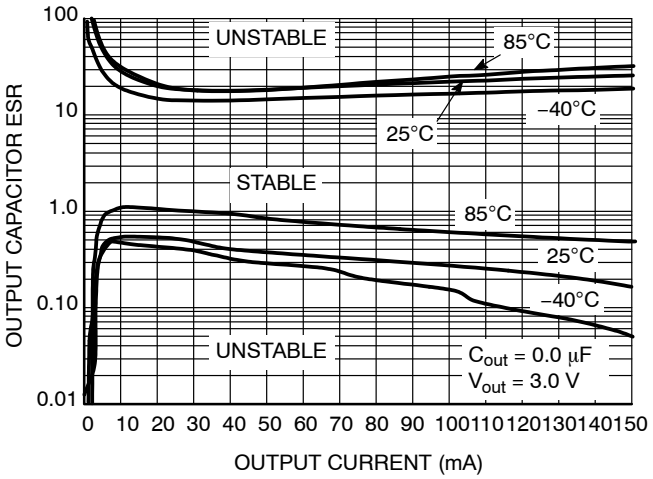

Figure 31. Output Stability versus Output Current Over Temperature (0.1 μF, 3.0 V)

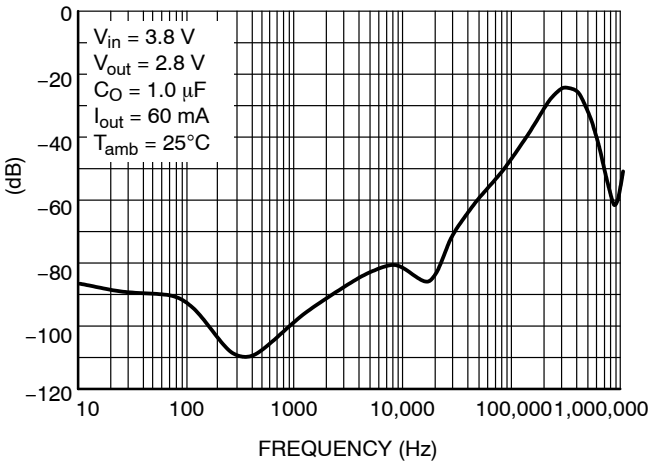

Figure 30. Ripple Rejection versus Frequency without Bypass Capacitor

ORDERING INFORMATION

Device	Version	Marking	Package	Shipping†
NCP623MN−25R2G	2.5 V	25	DFN6, 3x3 (Pb−Free)	3,000 Tape & Reel
NCP623MN−28R2G	2.8 V	28		
NCV8623MN−28R2G*				
NCV8623MN−33R2G*	3.3 V	33		
NCP623MN−40R2G	4.0 V	40		
NCV8623MN−50R2G*	5.0 V	50	DFN6, 3x3 (Pb−Free)	3,000 Tape & Reel

DISCONTINUED (Note 2)

NCV8623MN−25R2G*	2.5 V	25	DFN6, 3x3 (Pb−Free)	3,000 Tape & Reel
NCP623MN−30R2G	3.0 V	30	DFN6, 3x3 (Pb−Free)	3,000 Tape & Reel
NCV8623MN−30R2G*				
NCP623MN−33R2G	3.3 V	33	DFN6, 3x3 (Pb−Free)	3,000 Tape & Reel
NCV8623MN−40R2G*	4.0 V	40	DFN6, 3x3 (Pb−Free)	3,000 Tape & Reel
NCP623MN−50R2G	5.0 V	50	DFN6, 3x3 (Pb−Free)	3,000 Tape & Reel

†For information on tape and reel specifications, including part orientation and tape sizes, please refer to our Tape and Reel Packaging Specifications Brochure, BRD8011/D.

2. **DISCONTINUED:** These devices are not recommended for new design. Please contact your **onsemi** representative for information. The most current information on these devices may be available on www.onsemi.com.

*NCV Prefix for Automotive and Other Applications Requiring Unique Site and Control Change Requirements; AEC−Q100 Qualified and PPAP Capable.

6 PIN DFN, 3x3x0.9
CASE 488AE
ISSUE B

DATE 30 NOV 2005



SCALE 2:1

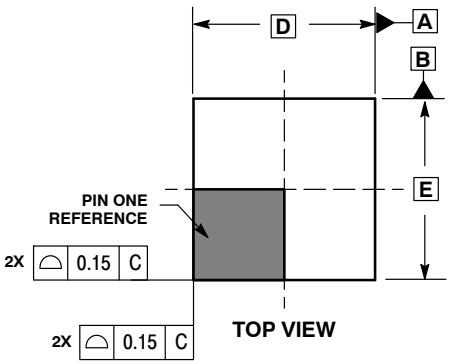

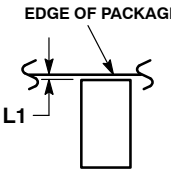

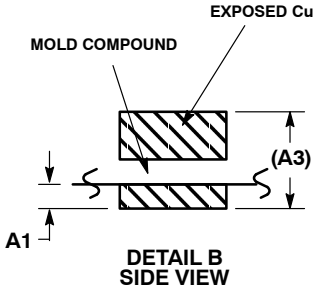

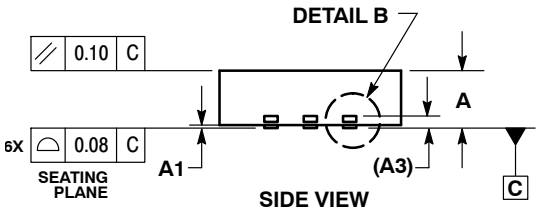

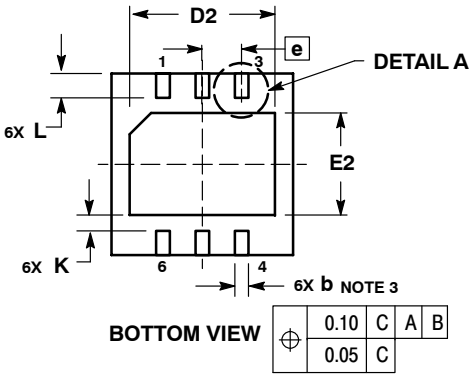

NOTES:
1. DIMENSIONS AND TOLERANCING PER ASME Y14.5M, 1994.
2. CONTROLLING DIMENSION: MILLIMETERS.
3. DIMENSION b APPLIES TO PLATED TERMINAL AND IS MEASURED BETWEEN 0.25 AND 0.30 MM FROM TERMINAL.
4. COPLANARITY APPLIES TO THE EXPOSED PAD AS WELL AS THE TERMINALS.
5. TERMINAL b MAY HAVE MOLD COMPOUND MATERIAL ALONG SIDE EDGE. MOLD FLASHING MAY NOT EXCEED 30 MICRONS ONTO BOTTOM SURFACE OF TERMINAL b.

	MILLIMETERS	
DIM	MIN	MAX
A	0.80	1.00
A1	0.00	0.05
A3	0.20	0.25
b	0.18	0.30
D	3.00 BSC	
D2	2.25	2.55
E	3.00 BSC	
E2	1.55	1.85
e	0.65 BSC	
K	0.20	–––
L	0.30	0.50
L1	0.00	0.021

GENERIC MARKING DIAGRAM*



XXXX = Specific Device Code
A = Assembly Location
L = Wafer Lot
Y = Year
W = Work Week

*This information is generic. Please refer to device data sheet for actual part marking. Pb–Free indicator, “G” or microdot “ ▪”, may or may not be present.

DOCUMENT NUMBER:	**98AON15231D**	Electronic versions are uncontrolled except when accessed directly from the Document Repository. Printed versions are uncontrolled except when stamped “CONTROLLED COPY” in red.
DESCRIPTION:	**6 PIN DFN, 3X3X0.9 MM, 0.65 MM PITCH**	**PAGE 1 OF 1**

onsemi and onsemi are trademarks of Semiconductor Components Industries, LLC dba **onsemi** or its subsidiaries in the United States and/or other countries. **onsemi** reserves the right to make changes without further notice to any products herein. **onsemi** makes no warranty, representation or guarantee regarding the suitability of its products for any particular purpose, nor does **onsemi** assume any liability arising out of the application or use of any product or circuit, and specifically disclaims any and all liability, including without limitation special, consequential or incidental damages. **onsemi** does not convey any license under its patent rights nor the rights of others.

© Semiconductor Components Industries, LLC, 2004

onsemi, , and other names, marks, and brands are registered and/or common law trademarks of Semiconductor Components Industries, LLC dba "**onsemi**" or its affiliates and/or subsidiaries in the United States and/or other countries. **onsemi** owns the rights to a number of patents, trademarks, copyrights, trade secrets, and other intellectual property. A listing of **onsemi**'s product/patent coverage may be accessed at www.onsemi.com/site/pdf/Patent−Marking.pdf. **onsemi** reserves the right to make changes at any time to any products or information herein, without notice. The information herein is provided "as−is" and **onsemi** makes no warranty, representation or guarantee regarding the accuracy of the information, product features, availability, functionality, or suitability of its products for any particular purpose, nor does **onsemi** assume any liability arising out of the application or use of any product or circuit, and specifically disclaims any and all liability, including without limitation special, consequential or incidental damages. Buyer is responsible for its products and applications using **onsemi** products, including compliance with all laws, regulations and safety requirements or standards, regardless of any support or applications information provided by **onsemi**. "Typical" parameters which may be provided in **onsemi** data sheets and/or specifications can and do vary in different applications and actual performance may vary over time. All operating parameters, including "Typicals" must be validated for each customer application by customer's technical experts. **onsemi** does not convey any license under any of its intellectual property rights nor the rights of others. **onsemi** products are not designed, intended, or authorized for use as a critical component in life support systems or any FDA Class 3 medical devices or medical devices with a same or similar classification in a foreign jurisdiction or any devices intended for implantation in the human body. Should Buyer purchase or use **onsemi** products for any such unintended or unauthorized application, Buyer shall indemnify and hold **onsemi** and its officers, employees, subsidiaries, affiliates, and distributors harmless against all claims, costs, damages, and expenses, and reasonable attorney fees arising out of, directly or indirectly, any claim of personal injury or death associated with such unintended or unauthorized use, even if such claim alleges that **onsemi** was negligent regarding the design or manufacture of the part. **onsemi** is an Equal Opportunity/Affirmative Action Employer. This literature is subject to all applicable copyright laws and is not for resale in any manner.

ADDITIONAL INFORMATION

TECHNICAL PUBLICATIONS:
Technical Library: www.onsemi.com/design/resources/technical−documentation
onsemi Website: www.onsemi.com

ONLINE SUPPORT: www.onsemi.com/support
For additional information, please contact your local Sales Representative at www.onsemi.com/support/sales

ENTEGRECİ

Bu belge www.entegreci.com üzerinden sunulmaktadır.

Elektronik komponent tedarikinde Entegreci

Entegreci, Eskişehir merkezli, Türkiye geneline satış yapan bir elektronik komponent mağazasıdır. Entegreler (IC), mikrodenetleyiciler, transistörler, diyotlar, pasif elemanlar, konnektörler, modüller ve geliştirme kartları tek adetten seri üretim adetlerine kadar satılır. Ürün sayfalarında güncel stok durumunu, fiyatı ve datasheet bağlantısını bulabilirsiniz.

Parça koduyla arama

Üretici parça numarasını yazın; stok ve fiyatı hemen görün.

www.entegreci.com

Ürün kategorileri

Entegreden kapasitöre tüm elektronik komponent kategorileri.

Kategorilere göz atın

Üreticiler

Aradığınız üreticinin ürünlerini tek sayfada inceleyin.

Üreticileri görün

Toplu alım ve teklif

Listede olmayan ya da yüksek adetli parçalar için teklif isteyin.

Teklif isteyin

www.entegreci.com | **destek@entegreci.com** | **0850 305 90 34**

Entegreci is an online electronic components store based in Türkiye. Search by manufacturer part number to see stock, prices and datasheets for integrated circuits, microcontrollers, transistors, passive components and connectors, or request a quote for parts that are not listed.

Bu sayfa Entegreci tarafından eklenmiştir. Belgenin önceki sayfaları asıl yayıncısına aittir ve içeriği değiştirilmemiştir; en güncel sürüm için belgenin yayıncısına başvurun.