# MSCGLQ50DU120CTBL1NG

## Dual Common Emitter High Speed IGBT4 Power Module

## Product Overview

The MSCGLQ50DU120CTBL1NG device is a 1200 V, 50 A dual common emitter high speed IGBT4 power module.

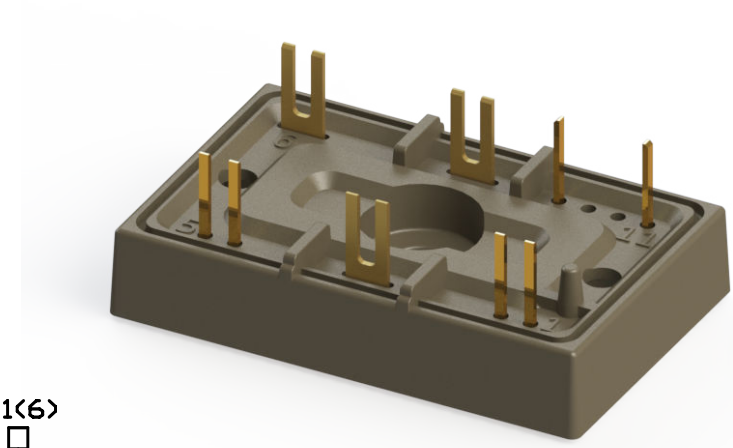

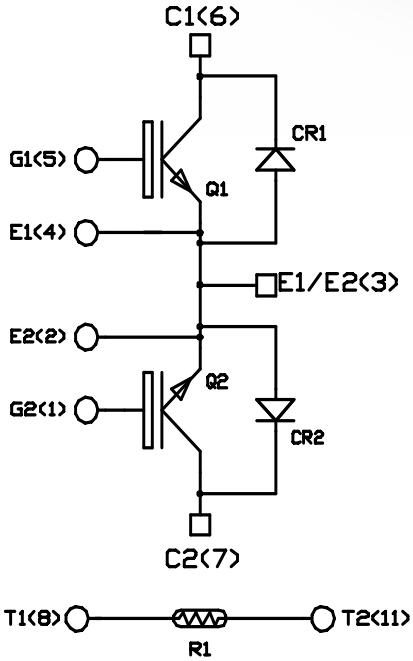


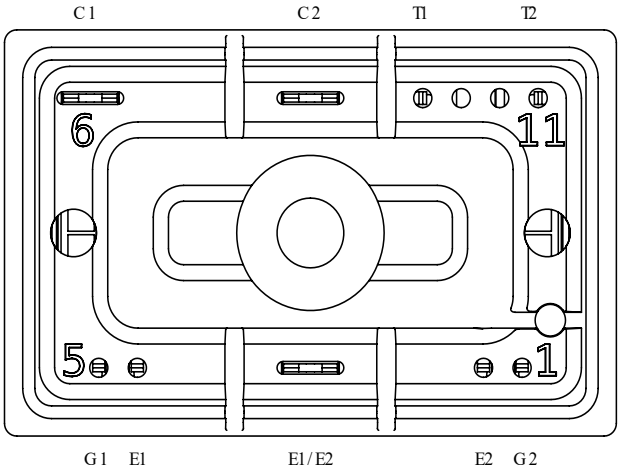


All ratings at $T_J$ = 25°C, unless otherwise specified.

**Caution:** These devices are sensitive to electrostatic discharge. Proper handling procedures must be followed.

© 2021 Microchip Technology Inc. and its subsidiaries

## Features

The following are the key features of MSCGLQ50DU120CTBL1NG device:

- High speed IGBT4
  - Low voltage drop
  - Low leakage current
  - Low switching losses
- SiC Schottky Diode
  - Zero reverse recovery
  - Zero forward recovery
  - Temperature independent switching behavior
  - Positive temperature coefficient on $V_F$
- Ultra-low weight and profile
- Kelvin emitter for easy drive
- $Si_3N_4$ substrate with thick copper for improved thermal performance
- Internal thermistor for temperature monitoring
- Extended temperature range

## Benefits

The following are the benefits of MSCGLQ50DU120CTBL1NG device:

- High efficiency converter
- Outstanding performance at high frequency operation
- Direct mounting to heatsink (isolated package)
- Low junction-to-heatsink thermal resistance
- Low profile
- RoHS compliant
- Solderable terminals both for power and signal for easy PCB mounting
- Very integrated power conversion system

## Application

The following are the applications of MSCGLQ50DU120CTBL1NG device:

- High reliability power systems
- AC switches

© 2021 Microchip Technology Inc.
and its subsidiaries

# 1. Electrical Specifications

This section provides the electrical specifications of MSCGLQ50DU120CTBL1NG device.

## 1.1 IGBT4 Characteristics (Per IGBT)

The following table lists the absolute maximum ratings of MSCGLQ50DU120CTBL1NG device.

**Table 1-1. Absolute Maximum Ratings**

| Symbol | Parameter | | Maximum Ratings | Unit |
|---|---|---|---|---|
| $V_{CES}$ | Collector-Emitter voltage | | 1200 | V |
| $I_C$ | Continuous collector current | $T_H$ = 25°C | 110 | A |
| | | $T_H$ = 100°C | 50 | |
| $I_{CM}$ | Pulsed collector current | $T_H$ = 25°C | 180 | |
| $V_{GE}$ | Gate-Emitter voltage | | ±20 | V |
| $P_D$ | Power dissipation | $T_H$ = 25 °C | 375 | W |

The following table lists the electrical characteristics of MSCGLQ50DU120CTBL1NG device.

**Table 1-2. Electrical Characteristics**

| Symbol | Characteristic | Test Conditions | | Min | Typ | Max | Unit |
|---|---|---|---|---|---|---|---|
| $I_{CES}$ | Zero gate voltage collector current | $V_{GE}$ = 0 V<br>$V_{CE}$ = 1200 V | | — | — | 25 | µA |
| $V_{CE(sat)}$ | Collector emitter saturation voltage | $V_{GE}$ = 15 V<br>$I_C$ = 50 A | $T_J$ = 25°C | 1.7 | 2.05 | 2.4 | V |
| | | | $T_J$ = 150°C | — | 2.6 | — | |
| $V_{GE(th)}$ | Gate threshold voltage | $V_{GE}$ = $V_{CE}$<br>$I_C$ = 1.7 mA | | 5.3 | 5.8 | 6.3 | V |
| $I_{GES}$ | Gate-Emitter leakage current | $V_{GE}$ = 20 V<br>$V_{CE}$ = 0 V | | — | — | 150 | nA |

© 2021 Microchip Technology Inc.
and its subsidiaries

The following table lists the dynamic characteristics of MSCGLQ50DU120CTBL1NG device.

**Table 1-3. Dynamic Characteristics**

| Symbol | Characteristic | Test Conditions | | Min | Typ | Max | Unit |
|---|---|---|---|---|---|---|---|
| $C_{ies}$ | Input capacitance | $V_{GE}$ = 0 V<br>$V_{CE}$ = 25 V<br>f = 1 MHz | | — | 2770 | — | pF |
| $C_{oes}$ | Output capacitance | | | — | 185 | — | |
| $C_{res}$ | Reverse transfer capacitance | | | — | 160 | — | |
| $Q_g$ | Total gate charge | $V_{GE}$ = 15 V<br>$V_{CE}$ = 960 V<br>$I_C$ = 50 A | | — | 230 | — | nC |
| $T_{d(on)}$ | Turn-on delay time | $V_{GE}$ = ±15 V<br>$V_{Bus}$ = 600 V<br>$I_C$ = 50 A<br>$R_G$ = 10 Ω<br>$T_J$ = 150°C | | — | 30 | — | ns |
| $T_r$ | Rise time | | | — | 49 | — | |
| $T_{d(off)}$ | Turn-off delay time | | | — | 366 | — | |
| $T_f$ | Fall time | | | | 48 | — | |
| $E_{on}$ | Turn-on switching energy | $V_{GE}$ = ±15 V<br>$V_{Bus}$ = 600 V<br>$I_C$ = 50 A<br>$R_G$ = 10 Ω | $T_J$ = 150°C | — | 2.8 | — | mJ |
| $E_{off}$ | Turn-off switching energy | | $T_J$ = 150°C | — | 2.8 | — | |
| $R_G$ | Integrated gate resistor | | | — | 4 | — | Ω |
| $I_{SC}$ | Short circuit data | $V_{GE}$ ≤ 15 V<br>$V_{Bus}$ = 900 V<br>$t_p$ ≤ 10 µs | $T_J$ = 150°C | — | 190 | | A |
| $R_{thJH}$ | Junction-to-heatsink thermal resistance | $\lambda_{paste}$ = 3.4 W/mK | | — | 0.4 | — | °C/W |

## 1.2 SiC Diode Characteristics (Per SiC Diode)

The following table lists the SiC diode characteristics of MSCGLQ50DU120CTBL1NG device.

**Table 1-4. SiC Diode Characteristics**

| Symbol | Characteristic | Test Conditions | | Min | Typ | Max | Unit |
|---|---|---|---|---|---|---|---|
| $V_{RRM}$ | Peak repetitive reverse voltage | | | — | — | 1200 | V |
| $I_{RM}$ | Reverse leakage current | $V_R$ = 1200 V | $T_J$ = 25°C | — | 10 | 200 | µA |
| | | | $T_J$ = 175°C | — | 150 | — | |
| $I_F$ | DC forward current | | $T_H$ = 100°C | — | 30 | — | A |
| $V_F$ | Diode forward voltage | $I_F$ = 30 A | $T_J$ = 25°C | — | 1.5 | 1.8 | V |
| | | | $T_J$ = 175°C | — | 2.1 | — | |
| $Q_C$ | Total capacitive charge | $V_R$ = 600 V | | — | 130 | — | nC |
| C | Total capacitance | f = 1 MHz<br>$V_R$ = 400 V | | — | 141 | — | pF |
| | | f = 1 MHz<br>$V_R$ = 800 V | | — | 105 | — | |
| $R_{thJH}$ | Junction-to-heatsink thermal resistance | λpaste = 3.4 W/mK | | — | 0.854 | — | °C/W |

## 1.3 Thermal and Package Characteristics

The following table lists the thermal and package characteristics of MSCGLQ50DU120CTBL1NG device.

**Table 1-5. Thermal and Package Characteristics**

| Symbol | Characteristic | | | Min | Typ | Max | Unit |
|---|---|---|---|---|---|---|---|
| $V_{ISOL}$ | RMS isolation voltage, any terminal to case t = 1 min, 50 Hz/60 Hz | | | 2500 | — | — | V |
| $T_J$ | Operating junction temperature range | | | –55 | — | 175 | °C |
| $T_{JOP}$ | Recommended junction temperature under switching conditions | | | –55 | — | $T_{Jmax}$–25 | |
| $T_{STG}$ | Storage case temperature | | | –55 | — | 125 | |
| $T_C$ | Operating case temperature | | | –55 | — | 125 | |
| Torque | Mounting torque | To heatsink | M4 | 1.5 | — | 2 | N.m |
| Wt | Package weight | | | — | 13.5 | — | g |

© 2021 Microchip Technology Inc.
and its subsidiaries

The following table lists the temperature sensor NTC of MSCGLQ50DU120CTBL1NG device.

**Table 1-6. Temperature Sensor NTC**

| Symbol | Characteristic | | Min | Typ | Max | Unit |
|---|---|---|---|---|---|---|
| $R_{25}$ | Resistance at 25 °C | | — | 50 | — | kΩ |
| $\Delta R_{25}/R_{25}$ | — | | — | 5 | — | % |
| $B_{25/85}$ | $T_{25}$ = 298.15 K | | — | 3952 | — | K |
| ΔB/B | — | $T_C$ = 100°C | — | 4 | — | % |

$$R_T = \frac{R_{25}}{\exp\left[B_{25/85}\left(\frac{1}{T_{25}} - \frac{1}{T}\right)\right]}$$

T: Thermistor temperature
$R_T$: Thermistor value at T

**Note:** See APT0406—Using NTC Temperature Sensor Integrated into Power Module for more information.

## 1.4 Typical IGBT4 Performance Curve (Per IGBT)

This section shows the typical IGBT4 performance curves of MSCGLQ50DU120CTBL1NG device.

**Figure 1-1. Junction-to-Heatsink Thermal Impedance**

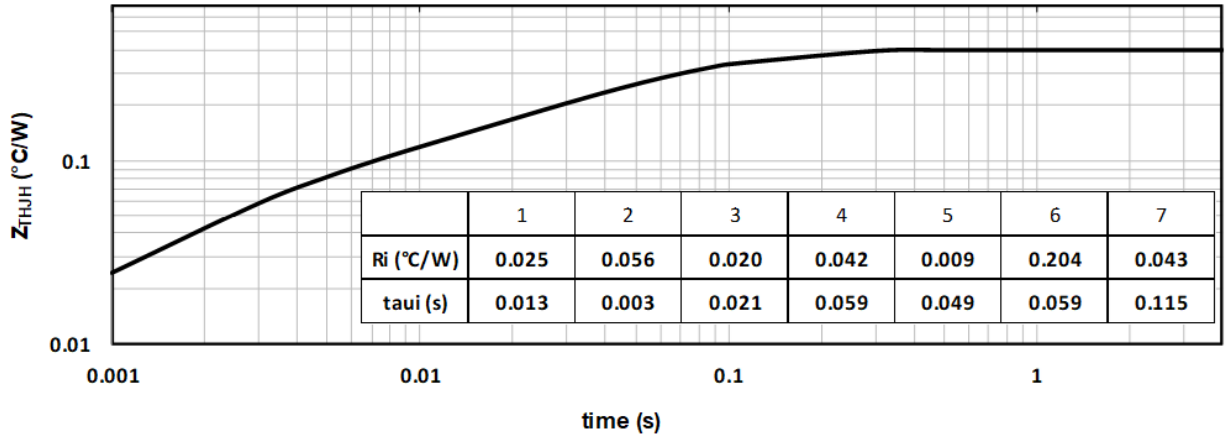


| | 1 | 2 | 3 | 4 | 5 | 6 | 7 |
|---|---|---|---|---|---|---|---|
| Ri (°C/W) | 0.025 | 0.056 | 0.020 | 0.042 | 0.009 | 0.204 | 0.043 |
| taui (s) | 0.013 | 0.003 | 0.021 | 0.059 | 0.049 | 0.059 | 0.115 |

**Figure 1-2. Output Characteristics ($V_{GE}$ = 15 V)**

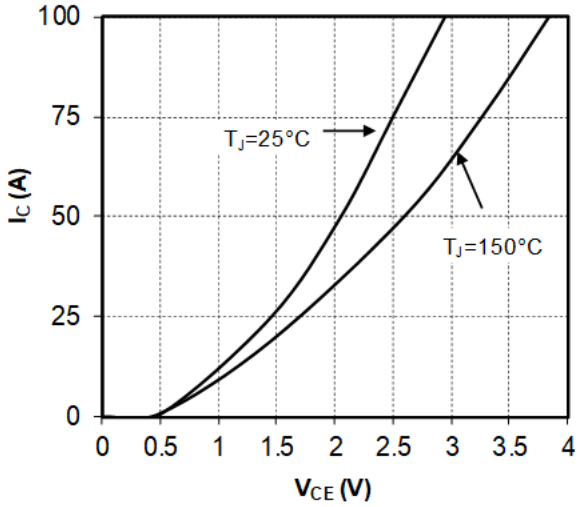


**Figure 1-3. Output Characteristics**

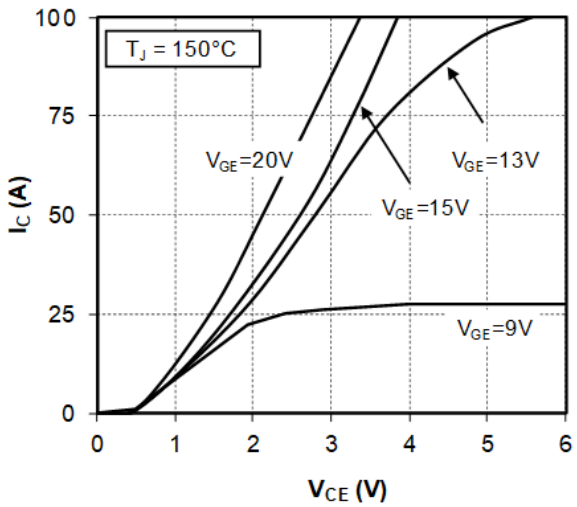

**Figure 1-4. Transfer Characteristics**

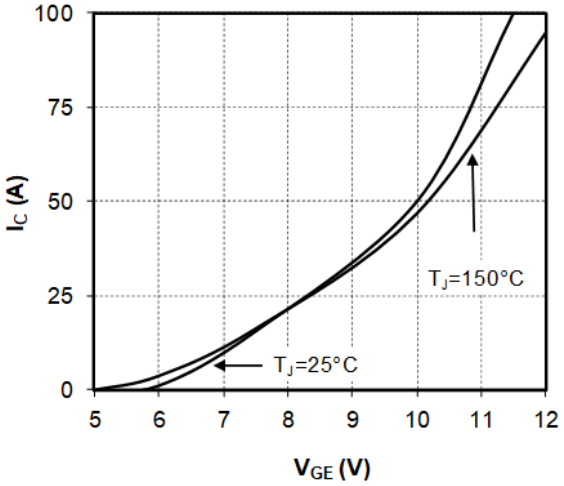


**Figure 1-5. Energy losses vs. Collector Current**

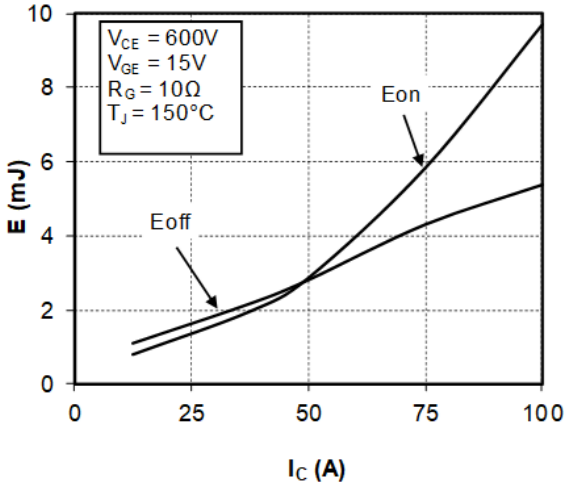


**Figure 1-6. Switching Energy Losses vs. Gate Resistance**

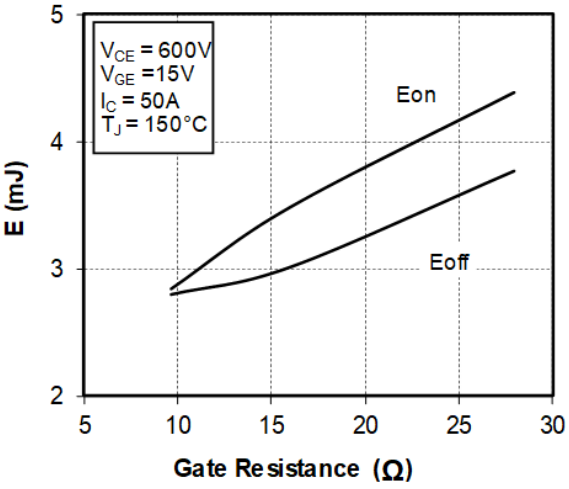


**Figure 1-7. Operating Frequency vs. Collector Current**

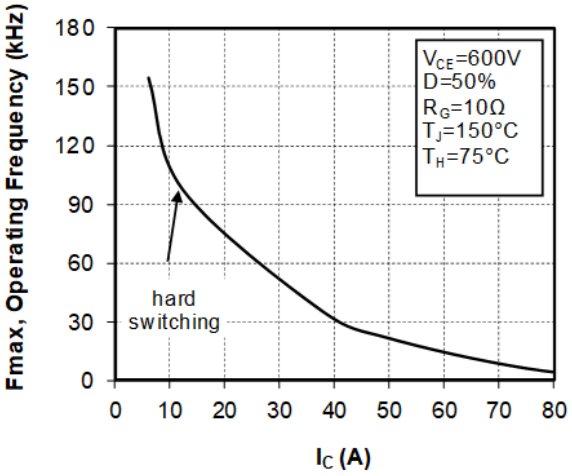

## 1.5 Typical SiC Diode Performance Curve (Per SiC Diode)

This section shows the typical SiC diode performance curves of MSCGLQ50DU120CTBL1NG device.

**Figure 1-8. Junction-to-Heatsink Thermal Impedance**

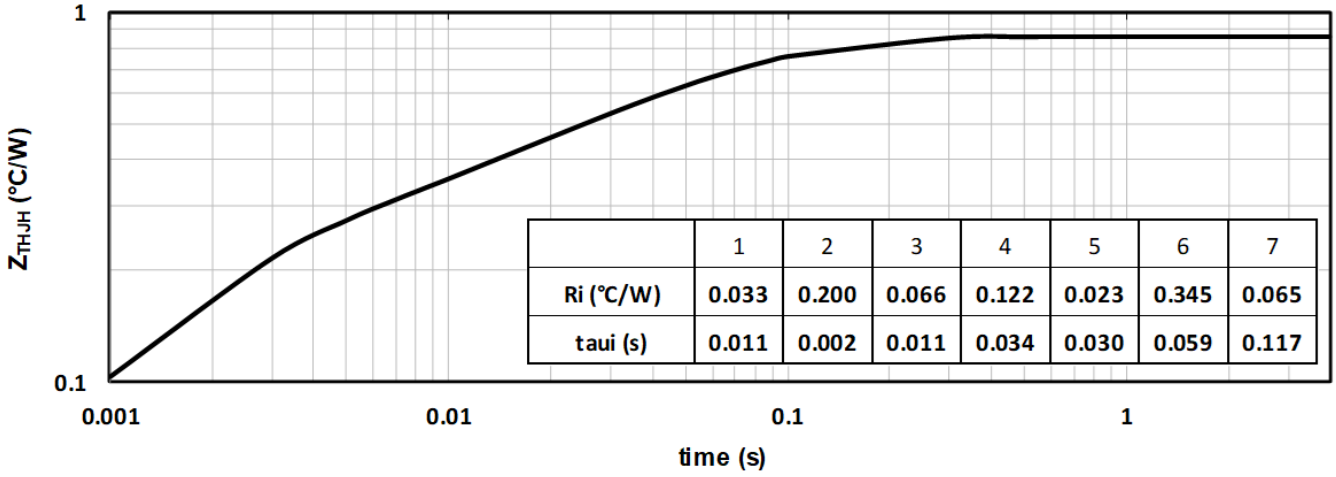


| | 1 | 2 | 3 | 4 | 5 | 6 | 7 |
|---|---|---|---|---|---|---|---|
| Ri (°C/W) | 0.033 | 0.200 | 0.066 | 0.122 | 0.023 | 0.345 | 0.065 |
| taui (s) | 0.011 | 0.002 | 0.011 | 0.034 | 0.030 | 0.059 | 0.117 |

**Figure 1-9. Forward Characteristics**

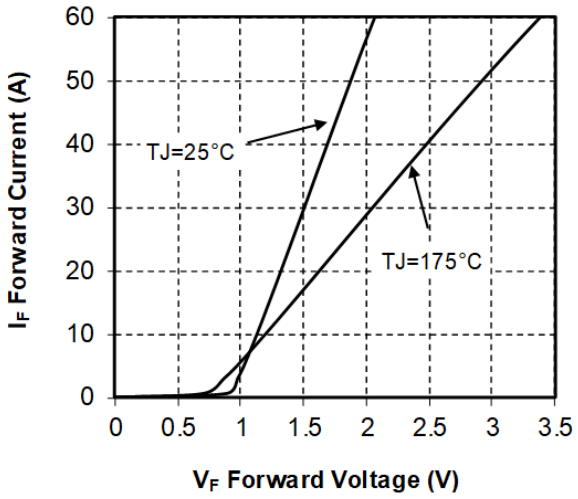


**Figure 1-10. Capacitance vs. Reverse Voltage**

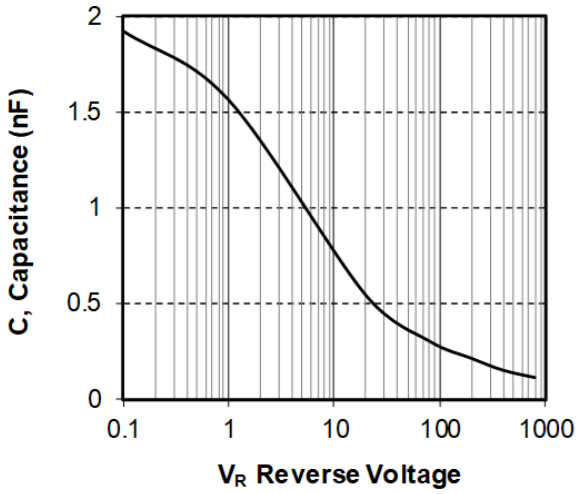

# 2. Package Specifications

The following section shows the package specification of MSCGLQ50DU120CTBL1NG device.

## 2.1 Package Outline

The following figure shows the package outline drawing of MSCGLQ50DU120CTBL1NG device. The dimensions in the following figure are in millimeters.

**Figure 2-1. Package Outline Drawing**

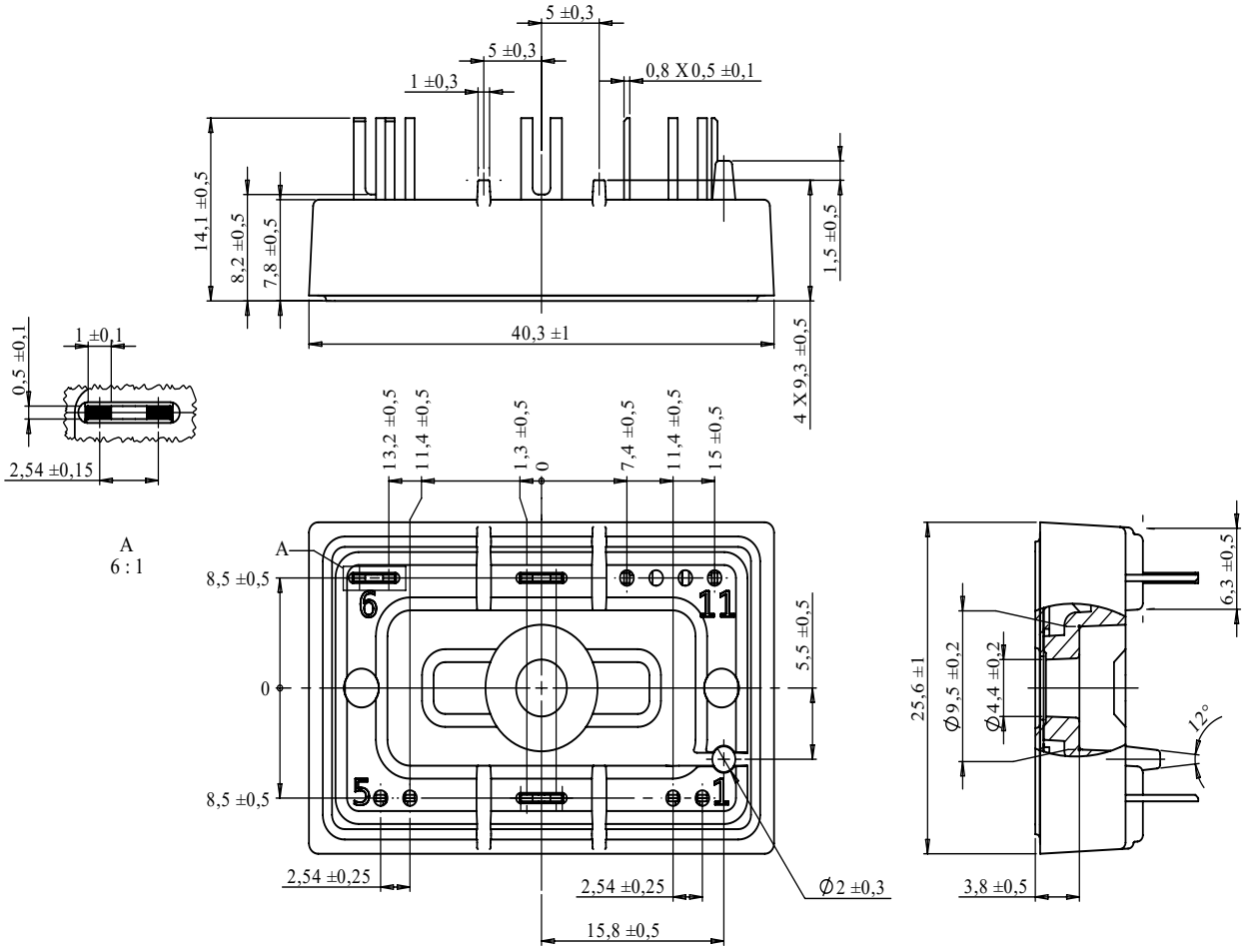

# 3. Revision History

| Revision | Date | Description |
|---|---|---|
| A | 07/2021 | Initial revision |

## The Microchip Website

Microchip provides online support via our website at www.microchip.com/. This website is used to make files and information easily available to customers. Some of the content available includes:

- **Product Support** – Data sheets and errata, application notes and sample programs, design resources, user's guides and hardware support documents, latest software releases and archived software
- **General Technical Support** – Frequently Asked Questions (FAQs), technical support requests, online discussion groups, Microchip design partner program member listing
- **Business of Microchip** – Product selector and ordering guides, latest Microchip press releases, listing of seminars and events, listings of Microchip sales offices, distributors and factory representatives

## Product Change Notification Service

Microchip's product change notification service helps keep customers current on Microchip products. Subscribers will receive email notification whenever there are changes, updates, revisions or errata related to a specified product family or development tool of interest.

To register, go to www.microchip.com/pcn and follow the registration instructions.

## Customer Support

Users of Microchip products can receive assistance through several channels:

- Distributor or Representative
- Local Sales Office
- Embedded Solutions Engineer (ESE)
- Technical Support

Customers should contact their distributor, representative or ESE for support. Local sales offices are also available to help customers. A listing of sales offices and locations is included in this document.

Technical support is available through the website at: www.microchip.com/support

## Microchip Devices Code Protection Feature

Note the following details of the code protection feature on Microchip devices:

- Microchip products meet the specifications contained in their particular Microchip Data Sheet.
- Microchip believes that its family of products is secure when used in the intended manner and under normal conditions.
- There are dishonest and possibly illegal methods being used in attempts to breach the code protection features of the Microchip devices. We believe that these methods require using the Microchip products in a manner outside the operating specifications contained in Microchip's Data Sheets. Attempts to breach these code protection features, most likely, cannot be accomplished without violating Microchip's intellectual property rights.
- Microchip is willing to work with any customer who is concerned about the integrity of its code.
- Neither Microchip nor any other semiconductor manufacturer can guarantee the security of its code. Code protection does not mean that we are guaranteeing the product is "unbreakable." Code protection is constantly evolving. We at Microchip are committed to continuously improving the code protection features of our products. Attempts to break Microchip's code protection feature may be a violation of the Digital Millennium Copyright Act. If such acts allow unauthorized access to your software or other copyrighted work, you may have a right to sue for relief under that Act.

© 2021 Microchip Technology Inc. and its subsidiaries

## Legal Notice

Information contained in this publication is provided for the sole purpose of designing with and using Microchip products. Information regarding device applications and the like is provided only for your convenience and may be superseded by updates. It is your responsibility to ensure that your application meets with your specifications.

THIS INFORMATION IS PROVIDED BY MICROCHIP “AS IS”. MICROCHIP MAKES NO REPRESENTATIONS OR WARRANTIES OF ANY KIND WHETHER EXPRESS OR IMPLIED, WRITTEN OR ORAL, STATUTORY OR OTHERWISE, RELATED TO THE INFORMATION INCLUDING BUT NOT LIMITED TO ANY IMPLIED WARRANTIES OF NON-INFRINGEMENT, MERCHANTABILITY, AND FITNESS FOR A PARTICULAR PURPOSE OR WARRANTIES RELATED TO ITS CONDITION, QUALITY, OR PERFORMANCE.

IN NO EVENT WILL MICROCHIP BE LIABLE FOR ANY INDIRECT, SPECIAL, PUNITIVE, INCIDENTAL OR CONSEQUENTIAL LOSS, DAMAGE, COST OR EXPENSE OF ANY KIND WHATSOEVER RELATED TO THE INFORMATION OR ITS USE, HOWEVER CAUSED, EVEN IF MICROCHIP HAS BEEN ADVISED OF THE POSSIBILITY OR THE DAMAGES ARE FORESEEABLE. TO THE FULLEST EXTENT ALLOWED BY LAW, MICROCHIP'S TOTAL LIABILITY ON ALL CLAIMS IN ANY WAY RELATED TO THE INFORMATION OR ITS USE WILL NOT EXCEED THE AMOUNT OF FEES, IF ANY, THAT YOU HAVE PAID DIRECTLY TO MICROCHIP FOR THE INFORMATION. Use of Microchip devices in life support and/or safety applications is entirely at the buyer’s risk, and the buyer agrees to defend, indemnify and hold harmless Microchip from any and all damages, claims, suits, or expenses resulting from such use. No licenses are conveyed, implicitly or otherwise, under any Microchip intellectual property rights unless otherwise stated.

## Trademarks

The Microchip name and logo, the Microchip logo, Adaptec, AnyRate, AVR, AVR logo, AVR Freaks, BesTime, BitCloud, chipKIT, chipKIT logo, CryptoMemory, CryptoRF, dsPIC, FlashFlex, flexPWR, HELDO, IGLOO, JukeBlox, KeeLoq, Kleer, LANCheck, LinkMD, maXStylus, maXTouch, MediaLB, megaAVR, Microsemi, Microsemi logo, MOST, MOST logo, MPLAB, OptoLyzer, PackeTime, PIC, picoPower, PICSTART, PIC32 logo, PolarFire, Prochip Designer, QTouch, SAM-BA, SenGenuity, SpyNIC, SST, SST Logo, SuperFlash, Symmetricom, SyncServer, Tachyon, TimeSource, tinyAVR, UNI/O, Vectron, and XMEGA are registered trademarks of Microchip Technology Incorporated in the U.S.A. and other countries.

AgileSwitch, APT, ClockWorks, The Embedded Control Solutions Company, EtherSynch, FlashTec, Hyper Speed Control, HyperLight Load, IntelliMOS, Libero, motorBench, mTouch, Powermite 3, Precision Edge, ProASIC, ProASIC Plus, ProASIC Plus logo, Quiet-Wire, SmartFusion, SyncWorld, Temux, TimeCesium, TimeHub, TimePictra, TimeProvider, WinPath, and ZL are registered trademarks of Microchip Technology Incorporated in the U.S.A.

Adjacent Key Suppression, AKS, Analog-for-the-Digital Age, Any Capacitor, AnyIn, AnyOut, Augmented Switching, BlueSky, BodyCom, CodeGuard, CryptoAuthentication, CryptoAutomotive, CryptoCompanion, CryptoController, dsPICDEM, dsPICDEM.net, Dynamic Average Matching, DAM, ECAN, Espresso T1S, EtherGREEN, IdealBridge, In-Circuit Serial Programming, ICSP, INICnet, Intelligent Paralleling, Inter-Chip Connectivity, JitterBlocker, maxCrypto, maxView, memBrain, Mindi, MiWi, MPASM, MPF, MPLAB Certified logo, MPLIB, MPLINK, MultiTRAK, NetDetach, Omniscient Code Generation, PICDEM, PICDEM.net, PICkit, PICtail, PowerSmart, PureSilicon, QMatrix, REAL ICE, Ripple Blocker, RTAX, RTG4, SAM-ICE, Serial Quad I/O, simpleMAP, SimpliPHY, SmartBuffer, SMART-I.S., storClad, SQI, SuperSwitcher, SuperSwitcher II, Switchtec, SynchroPHY, Total Endurance, TSHARC, USBCheck, VariSense, VectorBlox, VeriPHY, ViewSpan, WiperLock, XpressConnect, and ZENA are trademarks of Microchip Technology Incorporated in the U.S.A. and other countries.

SQTP is a service mark of Microchip Technology Incorporated in the U.S.A.

The Adaptec logo, Frequency on Demand, Silicon Storage Technology, and Symmcom are registered trademarks of Microchip Technology Inc. in other countries.

GestIC is a registered trademark of Microchip Technology Germany II GmbH & Co. KG, a subsidiary of Microchip Technology Inc., in other countries.

All other trademarks mentioned herein are property of their respective companies.

© 2021, Microchip Technology Incorporated, Printed in the U.S.A., All Rights Reserved.

ISBN: 978-1-5224-8548-3

## Quality Management System

For information regarding Microchip's Quality Management Systems, please visit www.microchip.com/quality.

# Worldwide Sales and Service

| AMERICAS | ASIA/PACIFIC | ASIA/PACIFIC | EUROPE |
|---|---|---|---|
| **Corporate Office**<br>2355 West Chandler Blvd.<br>Chandler, AZ 85224-6199<br>Tel: 480-792-7200<br>Fax: 480-792-7277<br>Technical Support:<br>www.microchip.com/support<br>Web Address:<br>www.microchip.com<br>**Atlanta**<br>Duluth, GA<br>Tel: 678-957-9614<br>Fax: 678-957-1455<br>**Austin, TX**<br>Tel: 512-257-3370<br>**Boston**<br>Westborough, MA<br>Tel: 774-760-0087<br>Fax: 774-760-0088<br>**Chicago**<br>Itasca, IL<br>Tel: 630-285-0071<br>Fax: 630-285-0075<br>**Dallas**<br>Addison, TX<br>Tel: 972-818-7423<br>Fax: 972-818-2924<br>**Detroit**<br>Novi, MI<br>Tel: 248-848-4000<br>**Houston, TX**<br>Tel: 281-894-5983<br>**Indianapolis**<br>Noblesville, IN<br>Tel: 317-773-8323<br>Fax: 317-773-5453<br>Tel: 317-536-2380<br>**Los Angeles**<br>Mission Viejo, CA<br>Tel: 949-462-9523<br>Fax: 949-462-9608<br>Tel: 951-273-7800<br>**Raleigh, NC**<br>Tel: 919-844-7510<br>**New York, NY**<br>Tel: 631-435-6000<br>**San Jose, CA**<br>Tel: 408-735-9110<br>Tel: 408-436-4270<br>**Canada - Toronto**<br>Tel: 905-695-1980<br>Fax: 905-695-2078 | **Australia - Sydney**<br>Tel: 61-2-9868-6733<br>**China - Beijing**<br>Tel: 86-10-8569-7000<br>**China - Chengdu**<br>Tel: 86-28-8665-5511<br>**China - Chongqing**<br>Tel: 86-23-8980-9588<br>**China - Dongguan**<br>Tel: 86-769-8702-9880<br>**China - Guangzhou**<br>Tel: 86-20-8755-8029<br>**China - Hangzhou**<br>Tel: 86-571-8792-8115<br>**China - Hong Kong SAR**<br>Tel: 852-2943-5100<br>**China - Nanjing**<br>Tel: 86-25-8473-2460<br>**China - Qingdao**<br>Tel: 86-532-8502-7355<br>**China - Shanghai**<br>Tel: 86-21-3326-8000<br>**China - Shenyang**<br>Tel: 86-24-2334-2829<br>**China - Shenzhen**<br>Tel: 86-755-8864-2200<br>**China - Suzhou**<br>Tel: 86-186-6233-1526<br>**China - Wuhan**<br>Tel: 86-27-5980-5300<br>**China - Xian**<br>Tel: 86-29-8833-7252<br>**China - Xiamen**<br>Tel: 86-592-2388138<br>**China - Zhuhai**<br>Tel: 86-756-3210040 | **India - Bangalore**<br>Tel: 91-80-3090-4444<br>**India - New Delhi**<br>Tel: 91-11-4160-8631<br>**India - Pune**<br>Tel: 91-20-4121-0141<br>**Japan - Osaka**<br>Tel: 81-6-6152-7160<br>**Japan - Tokyo**<br>Tel: 81-3-6880- 3770<br>**Korea - Daegu**<br>Tel: 82-53-744-4301<br>**Korea - Seoul**<br>Tel: 82-2-554-7200<br>**Malaysia - Kuala Lumpur**<br>Tel: 60-3-7651-7906<br>**Malaysia - Penang**<br>Tel: 60-4-227-8870<br>**Philippines - Manila**<br>Tel: 63-2-634-9065<br>**Singapore**<br>Tel: 65-6334-8870<br>**Taiwan - Hsin Chu**<br>Tel: 886-3-577-8366<br>**Taiwan - Kaohsiung**<br>Tel: 886-7-213-7830<br>**Taiwan - Taipei**<br>Tel: 886-2-2508-8600<br>**Thailand - Bangkok**<br>Tel: 66-2-694-1351<br>**Vietnam - Ho Chi Minh**<br>Tel: 84-28-5448-2100 | **Austria - Wels**<br>Tel: 43-7242-2244-39<br>Fax: 43-7242-2244-393<br>**Denmark - Copenhagen**<br>Tel: 45-4485-5910<br>Fax: 45-4485-2829<br>**Finland - Espoo**<br>Tel: 358-9-4520-820<br>**France - Paris**<br>Tel: 33-1-69-53-63-20<br>Fax: 33-1-69-30-90-79<br>**Germany - Garching**<br>Tel: 49-8931-9700<br>**Germany - Haan**<br>Tel: 49-2129-3766400<br>**Germany - Heilbronn**<br>Tel: 49-7131-72400<br>**Germany - Karlsruhe**<br>Tel: 49-721-625370<br>**Germany - Munich**<br>Tel: 49-89-627-144-0<br>Fax: 49-89-627-144-44<br>**Germany - Rosenheim**<br>Tel: 49-8031-354-560<br>**Israel - Ra'anana**<br>Tel: 972-9-744-7705<br>**Italy - Milan**<br>Tel: 39-0331-742611<br>Fax: 39-0331-466781<br>**Italy - Padova**<br>Tel: 39-049-7625286<br>**Netherlands - Drunen**<br>Tel: 31-416-690399<br>Fax: 31-416-690340<br>**Norway - Trondheim**<br>Tel: 47-72884388<br>**Poland - Warsaw**<br>Tel: 48-22-3325737<br>**Romania - Bucharest**<br>Tel: 40-21-407-87-50<br>**Spain - Madrid**<br>Tel: 34-91-708-08-90<br>Fax: 34-91-708-08-91<br>**Sweden - Gothenberg**<br>Tel: 46-31-704-60-40<br>**Sweden - Stockholm**<br>Tel: 46-8-5090-4654<br>**UK - Wokingham**<br>Tel: 44-118-921-5800<br>Fax: 44-118-921-5820 |

© 2021 Microchip Technology Inc.
and its subsidiaries

ENTEGRECİ

Bu belge www.entegreci.com üzerinden sunulmaktadır.

# Elektronik komponent tedarikinde Entegreci

Entegreci, Eskişehir merkezli, Türkiye geneline satış yapan bir elektronik komponent mağazasıdır. Entegreler (IC), mikrodenetleyiciler, transistörler, diyotlar, pasif elemanlar, konnektörler, modüller ve geliştirme kartları tek adetten seri üretim adetlerine kadar satılır. Ürün sayfalarında güncel stok durumunu, fiyatı ve datasheet bağlantısını bulabilirsiniz.

### Parça koduyla arama

Üretici parça numarasını yazın; stok ve fiyatı hemen görün.

**www.entegreci.com**

### Ürün kategorileri

Entegreden kapasitöre tüm elektronik komponent kategorileri.

**Kategorilere göz atın**

### Üreticiler

Aradığınız üreticinin ürünlerini tek sayfada inceleyin.

**Üreticileri görün**

### Toplu alım ve teklif

Listede olmayan ya da yüksek adetli parçalar için teklif isteyin.

**Teklif isteyin**

**www.entegreci.com** | **destek@entegreci.com** | **0850 305 90 34**

Entegreci is an online electronic components store based in Türkiye. Search by manufacturer part number to see stock, prices and datasheets for integrated circuits, microcontrollers, transistors, passive components and connectors, or request a quote for parts that are not listed.

Bu sayfa Entegreci tarafından eklenmiştir. Belgenin önceki sayfaları asıl yayıncısına aittir ve içeriği değiştirilmemiştir; en güncel sürüm için belgenin yayıncısına başvurun.