MMDF1300

Power MOSFET
3 Amps, 25 Volts
Complementary SO–8, Dual

These miniature surface mount MOSFETs feature ultra low $R_{DS(on)}$ and true logic level performance. They are capable of withstanding high energy in the avalanche and commutation modes and the drain–to–source diode has a very low reverse recovery time. MiniMOS™ devices are designed for use in low voltage, high speed switching applications where power efficiency is important. Typical applications are dc–dc converters, and power management in portable and battery powered products such as computers, printers, cellular and cordless phones. They can also be used for low voltage motor controls in mass storage products such as disk drives and tape drives. The avalanche energy is specified to eliminate the guesswork in designs where inductive loads are switched and offer additional safety margin against unexpected voltage transients.

- Low $R_{DS(on)}$ Provides Higher Efficiency and Extends Battery Life
- Logic Level Gate Drive – Can be Driven by Logic ICs
- Miniature SO–8 Surface Mount Package – Saves Board Space
- Diode Exhibits High Speed, with Soft Recovery

MAXIMUM RATINGS (T_J = 25°C unless otherwise noted)

Rating	Symbol	Value	Unit
Drain–to–Source Voltage	V_{DSS}	25	Vdc
Gate–to–Source Voltage	V_{GS}	± 20	Vdc
Drain Current – Continuous N–Channel P–Channel	I_D	 3.0 2.0	Adc
Drain Current – Pulsed N–Channel P–Channel	I_{DM}	 9.0 6.0	Apk
Operating and Storage Temperature Range	T_J, T_{stg}	–65 to +150	°C
Total Power Dissipation @ T_A = 25°C	P_D	1.8	Watts
Single Pulse Drain–to–Source Avalanche Energy – Starting T_J = 25°C (V_{DD} = 20 Vdc, V_{GS} = 10 Vdc, I_L = 3.0 Apk, L = 25 mH, R_G = 25 Ω)	E_{AS}	113	mJ
Thermal Resistance – Junction–to–Ambient (Note 1.)	$R_{\theta JA}$	66.3	°C/W
Maximum Lead Temperature for Soldering Purposes, 1/8″ from Case for 10 sec.	T_L	260	°C

1. Mounted on 2″ square FR4 board (1″ sq. 2 oz. Cu 0.06″ thick single sided), 10 sec. max.

ON Semiconductor™

http://onsemi.com

3 AMPERES
25 VOLTS
$R_{DS(on)}$ = 100 mΩ (N–Channel)
$R_{DS(on)}$ = 210 mΩ (P–Channel)

N–Channel **P–Channel**

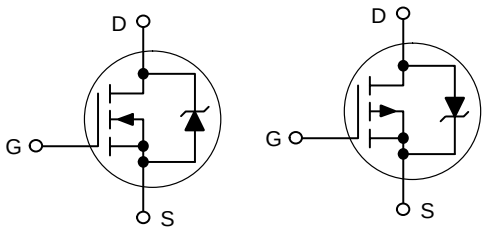

MARKING DIAGRAM

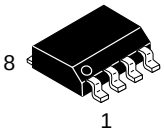

SO–8, Dual
CASE 751
STYLE 11

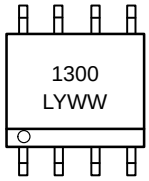

1300 = Device Code
L = Location Code
Y = Year
WW = Work Week

PIN ASSIGNMENT

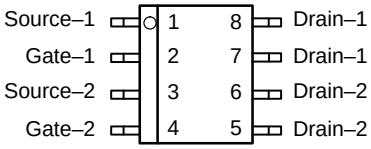

Top View

ORDERING INFORMATION

Device	Package	Shipping
MMDF1300R2	SO–8	2500 Tape & Reel

© Semiconductor Components Industries, LLC, 2001

ELECTRICAL CHARACTERISTICS (T_A = 25°C unless otherwise noted)

Characteristic		Symbol	Polarity	Min	Typ	Max	Unit
OFF CHARACTERISTICS							
Drain–to–Source Breakdown Voltage (V_{GS} = 0 Vdc, I_D = 250 μAdc)		$V_{(BR)DSS}$	–	30	–	–	Vdc
Zero Gate Voltage Drain Current (V_{DS} = 25 Vdc, V_{GS} = 0 Vdc)		I_{DSS}	(N) (P)	– –	– –	1.0 1.0	μAdc
Gate–Body Leakage Current (V_{GS} = 20 Vdc, V_{DS} = 0)		I_{GSS}	–	–	–	±100	nAdc
ON CHARACTERISTICS (Notes 2. & 3.)							
Gate Threshold Voltage (V_{DS} = V_{GS}, I_D = 250 μAdc)		$V_{GS(th)}$	(N) (P)	1.0 1.0	1.5 2.0	2.0 3.0	Vdc
Drain–to–Source On–Resistance (V_{GS} = 10 Vdc, I_D = 2.0 Adc)		$R_{DS(on)}$	(N) (P)	– –	0.09 0.16	0.10 0.21	Ohms
Drain–to–Source On–Resistance (V_{GS} = 4.5 Vdc, I_D = 1.0 Adc)		$R_{DS(on)}$	(N) (P)	– –	0.13 0.30	0.16 0.375	Ohms
Forward Transconductance (V_{DS} = 3.0 Vdc, I_D = 1.5 Adc)		g_{FS}	(N) (P)	1.0 1.0	– –	– –	mhos
DYNAMIC CHARACTERISTICS							
Input Capacitance	(V_{DS} = 16 Vdc, V_{GS} = 0 Vdc, f = 1.0 MHz)	C_{iss}	(N) (P)	– –	215 200	301 300	pF
Output Capacitance		C_{oss}	(N) (P)	– –	111 100	158 160	
Transfer Capacitance		C_{rss}	(N) (P)	– –	30 40	60 75	
SWITCHING CHARACTERISTICS (Note 4.)							
Turn–On Delay Time	(V_{DD} = 10 Vdc, I_D = 2.0 Adc, V_{GS} = 4.5 Vdc, R_G = 6.0 Ω)	$t_{d(on)}$	(N) (P)	– –	18 14	36 28	ns
Rise Time		t_r	(N) (P)	– –	98 95	196 180	
Turn–Off Delay Time		$t_{d(off)}$	(N) (P)	– –	16 22	32 45	
Fall Time		t_f	(N) (P)	– –	30 40	60 80	
Total Gate Charge	(V_{DS} = 16 Vdc, I_D = 2.0 Adc, V_{GS} = 4.5 Vdc)	Q_T	(N) (P)	– –	3.3 7.0	5.0 10	nC
		Q_1	(N) (P)	– –	1.2 1.2	– –	
		Q_2	(N) (P)	– –	2.0 2.5	– –	
		Q_3	(N) (P)	– –	1.9 3.5	– –	

2. Pulse Test: Pulse Width ≤ 300 μs, Duty Cycle ≤ 2%.
3. Negative signs for P–Channel device omitted for clarity.
4. Switching characteristics are independent of operating junction temperature.

ELECTRICAL CHARACTERISTICS – continued (T_A = 25°C unless otherwise noted)

Characteristic		Symbol	Polarity	Min	Typ	Max	Unit
SOURCE–DRAIN DIODE CHARACTERISTICS (Note 5.)							
Forward On–Voltage (Note 6.)	(I_S = 3.0 Adc, V_{GS} = 0 Vdc) (I_S = 2.0 Adc, V_{GS} = 0 Vdc)	V_{SD}	(N) (P)	– –	1.0 1.3	1.4 1.7	Vdc
Reverse Recovery Time	(N) (I_D = 2.0 Adc, V_{GS} = 0 Vdc, dI_S/dt = 100 A/μs)	t_{rr}	(N) (P)	– –	23 20	– –	ns
		t_a	(N) (P)	– –	18 13	– –	
		t_b	(N) (P)	– –	5.0 7.0	– –	
Reverse Recovery Stored Charge		Q_{RR}	(N) (P)	– –	0.02 0.02	– –	μC

5. Negative signs for P–Channel device omitted for clarity.
6. Pulse Test: Pulse Width ≤ 300 μs, Duty Cycle ≤ 2%.

PACKAGE DIMENSIONS

SO–8
CASE 751–07
ISSUE V

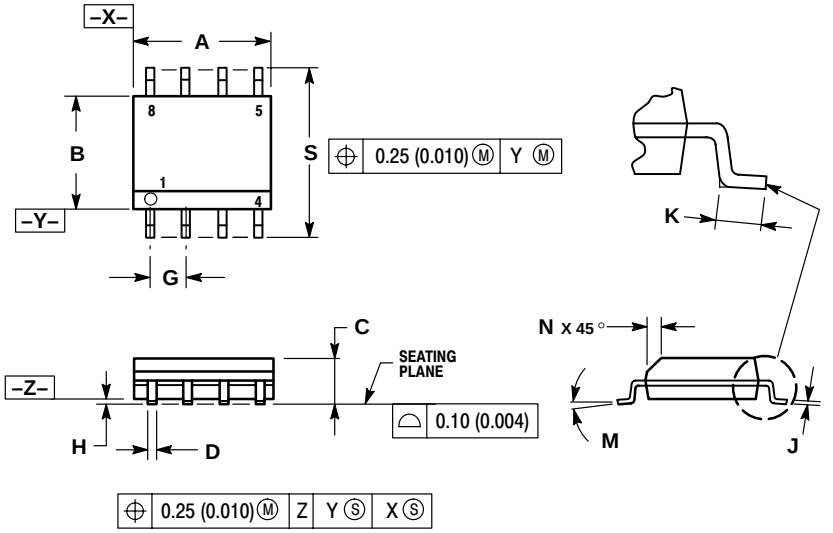

NOTES:
1. DIMENSIONING AND TOLERANCING PER ANSI Y14.5M, 1982.
2. CONTROLLING DIMENSION: MILLIMETER.
3. DIMENSION A AND B DO NOT INCLUDE MOLD PROTRUSION.
4. MAXIMUM MOLD PROTRUSION 0.15 (0.006) PER SIDE.
5. DIMENSION D DOES NOT INCLUDE DAMBAR PROTRUSION. ALLOWABLE DAMBAR PROTRUSION SHALL BE 0.127 (0.005) TOTAL IN EXCESS OF THE D DIMENSION AT MAXIMUM MATERIAL CONDITION.

	MILLIMETERS		INCHES	
DIM	MIN	MAX	MIN	MAX
A	4.80	5.00	0.189	0.197
B	3.80	4.00	0.150	0.157
C	1.35	1.75	0.053	0.069
D	0.33	0.51	0.013	0.020
G	1.27 BSC		0.050 BSC	
H	0.10	0.25	0.004	0.010
J	0.19	0.25	0.007	0.010
K	0.40	1.27	0.016	0.050
M	0 °	8 °	0 °	8 °
N	0.25	0.50	0.010	0.020
S	5.80	6.20	0.228	0.244

STYLE 11:
PIN 1. SOURCE 1
2. GATE 1
3. SOURCE 2
4. GATE 2
5. DRAIN 2
6. DRAIN 2
7. DRAIN 1
8. DRAIN 1

MiniMOS is a trademark of Semiconductor Components Industries, LLC (SCILLC).

ON Semiconductor and ON are trademarks of Semiconductor Components Industries, LLC (SCILLC). SCILLC reserves the right to make changes without further notice to any products herein. SCILLC makes no warranty, representation or guarantee regarding the suitability of its products for any particular purpose, nor does SCILLC assume any liability arising out of the application or use of any product or circuit, and specifically disclaims any and all liability, including without limitation special, consequential or incidental damages. "Typical" parameters which may be provided in SCILLC data sheets and/or specifications can and do vary in different applications and actual performance may vary over time. All operating parameters, including "Typicals" must be validated for each customer application by customer's technical experts. SCILLC does not convey any license under its patent rights nor the rights of others. SCILLC products are not designed, intended, or authorized for use as components in systems intended for surgical implant into the body, or other applications intended to support or sustain life, or for any other application in which the failure of the SCILLC product could create a situation where personal injury or death may occur. Should Buyer purchase or use SCILLC products for any such unintended or unauthorized application, Buyer shall indemnify and hold SCILLC and its officers, employees, subsidiaries, affiliates, and distributors harmless against all claims, costs, damages, and expenses, and reasonable attorney fees arising out of, directly or indirectly, any claim of personal injury or death associated with such unintended or unauthorized use, even if such claim alleges that SCILLC was negligent regarding the design or manufacture of the part. SCILLC is an Equal Opportunity/Affirmative Action Employer.

PUBLICATION ORDERING INFORMATION

NORTH AMERICA Literature Fulfillment:
Literature Distribution Center for ON Semiconductor
P.O. Box 5163, Denver, Colorado 80217 USA
Phone: 303–675–2175 or 800–344–3860 Toll Free USA/Canada
Fax: 303–675–2176 or 800–344–3867 Toll Free USA/Canada
Email: ONlit@hibbertco.com
Fax Response Line: 303–675–2167 or 800–344–3810 Toll Free USA/Canada

N. American Technical Support: 800–282–9855 Toll Free USA/Canada

EUROPE: LDC for ON Semiconductor – European Support
German Phone: (+1) 303–308–7140 (Mon–Fri 2:30pm to 7:00pm CET)
Email: ONlit–german@hibbertco.com
French Phone: (+1) 303–308–7141 (Mon–Fri 2:00pm to 7:00pm CET)
Email: ONlit–french@hibbertco.com
English Phone: (+1) 303–308–7142 (Mon–Fri 12:00pm to 5:00pm GMT)
Email: ONlit@hibbertco.com

EUROPEAN TOLL–FREE ACCESS*: 00–800–4422–3781
*Available from Germany, France, Italy, UK, Ireland

CENTRAL/SOUTH AMERICA:
Spanish Phone: 303–308–7143 (Mon–Fri 8:00am to 5:00pm MST)
Email: ONlit–spanish@hibbertco.com
Toll–Free from Mexico: Dial 01–800–288–2872 for Access – then Dial 866–297–9322

ASIA/PACIFIC: LDC for ON Semiconductor – Asia Support
Phone: 303–675–2121 (Tue–Fri 9:00am to 1:00pm, Hong Kong Time)
Toll Free from Hong Kong & Singapore:
001–800–4422–3781
Email: ONlit–asia@hibbertco.com

JAPAN: ON Semiconductor, Japan Customer Focus Center
4–32–1 Nishi–Gotanda, Shinagawa–ku, Tokyo, Japan 141–0031
Phone: 81–3–5740–2700
Email: r14525@onsemi.com

ON Semiconductor Website: http://onsemi.com

For additional information, please contact your local Sales Representative.

ENTEGRECİ

Bu belge www.entegreci.com üzerinden sunulmaktadır.

Elektronik komponent tedarikinde Entegreci

Entegreci, Eskişehir merkezli, Türkiye geneline satış yapan bir elektronik komponent mağazasıdır. Entegreler (IC), mikrodenetleyiciler, transistörler, diyotlar, pasif elemanlar, konnektörler, modüller ve geliştirme kartları tek adetten seri üretim adetlerine kadar satılır. Ürün sayfalarında güncel stok durumunu, fiyatı ve datasheet bağlantısını bulabilirsiniz.

Parça koduyla arama

Üretici parça numarasını yazın; stok ve fiyatı hemen görün.

www.entegreci.com

Ürün kategorileri

Entegreden kapasitöre tüm elektronik komponent kategorileri.

Kategorilere göz atın

Üreticiler

Aradığınız üreticinin ürünlerini tek sayfada inceleyin.

Üreticileri görün

Toplu alım ve teklif

Listede olmayan ya da yüksek adetli parçalar için teklif isteyin.

Teklif isteyin

www.entegreci.com | **destek@entegreci.com** | **0850 305 90 34**

Entegreci is an online electronic components store based in Türkiye. Search by manufacturer part number to see stock, prices and datasheets for integrated circuits, microcontrollers, transistors, passive components and connectors, or request a quote for parts that are not listed.

Bu sayfa Entegreci tarafından eklenmiştir. Belgenin önceki sayfaları asıl yayıncısına aittir ve içeriği değiştirilmemiştir; en güncel sürüm için belgenin yayıncısına başvurun.