Features

- Trench Power LV MOSFET Technology
- Excellent Package For Heat Dissipation
- Moisture Sensitivity Level 1
- Halogen Free. “Green” Device (Note1)
- Epoxy Meets UL 94 V-0 Flammability Rating
- Lead Free Finish/RoHS Compliant ("P" Suffix Designates RoHS Compliant. See Ordering Information)

N-CHANNEL MOSFET

Maximum Ratings

- Operating Junction Temperature Range : -55°C to +175°C
- Storage Temperature Range: -55°C to +175°C
- Thermal Resistance: 50°C/W Junction to Ambient(Note2)
- Thermal Resistance: 3°C/W Junction to Case

Parameter		Symbol	Rating	Unit
Drain-Source Voltage		V_{DS}	30	V
Gate-Source Volltage		V_{GS}	±20	V
Continuous Drain Current	T_C=25°C	I_D	50	A
	T_C=100°C		35	
Pulsed Drain Current (Note3)		I_{DM}	200	A
Total Power Dissipation(Note4)		P_D	50	W
Avalanche Energy (Note5)		E_{AS}	196	mJ

Note:

1. Halogen free "Green” products are defined as those which contain <900ppm bromine, <900ppm chlorine (<1500ppm total Br + Cl) and <1000ppm antimony compounds.
2. The value of $R_{\theta JA}$ is measured with the device mounted on 1in^2 FR-4 board with 2oz. Copper, in a still air environment with T_A =25°C.
3. Repetitive rating; pulse width limited by max. junction temperature.
4. P_D is based on max. junction temperature, using junction-case thermal resistance.
5. T_J=25°C, V_{DD}=25V, V_{GS}=10V, L=2mH.

DFN5060

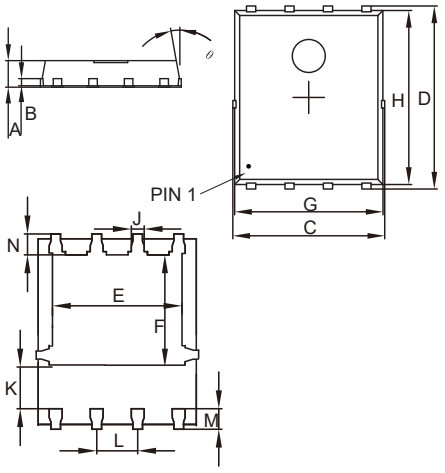

DIMENSIONS					
DIM	INCHES		MM		NOTE
	MIN	MAX	MIN	MAX	
A	0.031	0.047	0.80	1.20	
B	0.010		0.254		TYP.
C	0.193	0.222	4.90	5.64	
D	0.232	0.250	5.90	6.35	
E	0.148	0.167	3.75	4.25	
F	0.126	0.154	3.20	3.92	
G	0.189	0.213	4.80	5.40	
H	0.222	0.239	5.65	6.06	
K	0.045	0.059	1.15	1.50	
J	0.012	0.020	0.30	0.50	
L	0.046	0.054	1.17	1.37	
M	0.012	0.028	0.30	0.71	
N	0.016	0.028	0.40	0.71	

Internal Structure and Marking Code

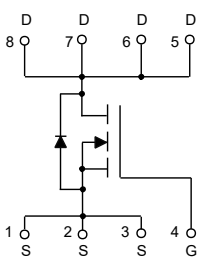

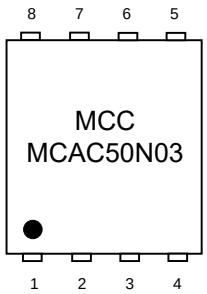

Electrical Characteristics @ 25°C (Unless Otherwise Specified)

Parameter	Symbol	Test Conditions	Min	Typ	Max	Unit
Static Characteristics						
Drain-Source Breakdown Voltage	$V_{(BR)DSS}$	V_{GS}=0V, I_D=250μA	30			V
Gate-Source Leakage Current	I_{GSS}	V_{DS}=0V, V_{GS} =±20V			±100	nA
Zero Gate Voltage Drain Current	I_{DSS}	V_{DS}=30V, V_{GS}=0V			1	μA
Gate-Threshold Voltage	$V_{GS(th)}$	V_{DS}=V_{GS}, I_D=250μA	1	1.5	2.5	V
Drain-Source On-Resistance	$R_{DS(on)}$	V_{GS}=10V, I_D=15A		3.9	4.7	mΩ
		V_{GS}=4.5V, I_D=15A		5	6	
Gate Resistance	R_g	f=1 MHz, Open drain		2		Ω
Diode Characteristics						
Continuous Body Diode Current	I_S				50	A
Diode Forward Voltage	V_{SD}	V_{GS}=0V, I_S=20A			1.2	V
Reverse Recovery Time	t_{rr}	I_S=15A,di/dt=100A/μs		24		ns
Reverse Recovery Charge	Q_{rr}			15		nC
Dynamic Characteristics						
Input Capacitance	C_{iss}	V_{DS}=15V,V_{GS}=0V,f=1MHz		2041		pF
Output Capacitance	C_{oss}			359		
Reverse Transfer Capacitance	C_{rss}			311		
Total Gate Charge	Q_g	V_{DS}=15V,V_{GS}=10V,I_D=15A		43.5		nC
Gate-Source Charge	Q_{gs}			5.2		
Gate-Drain Charge	Q_{gd}			10.8		
Turn-On Delay Time	$t_{d(on)}$	V_{DD}=15V, V_{GS}=10V, R_G=3Ω, I_{DS}=15A		8.7		ns
Turn-On Rise Time	t_r			12		
Turn-Off Delay Time	$t_{d(off)}$			32		
Turn-Off Fall Time	t_f			12.8		

Curve Characteristics

Fig. 1 - Typical Output Characteristics

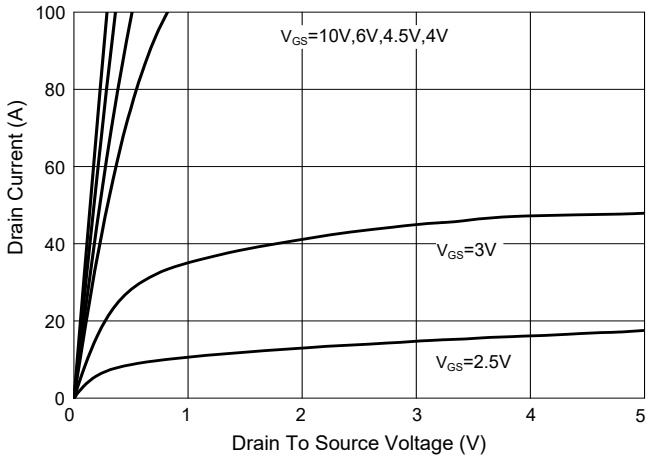

Fig. 2 - Transfer Characteristics

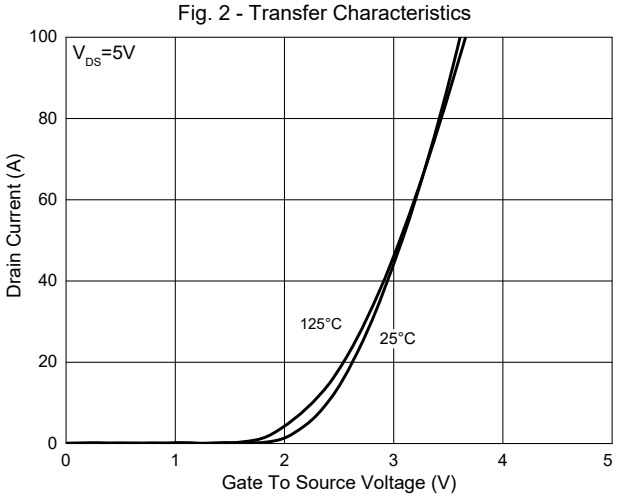

Fig.3-Rdson-Vgs

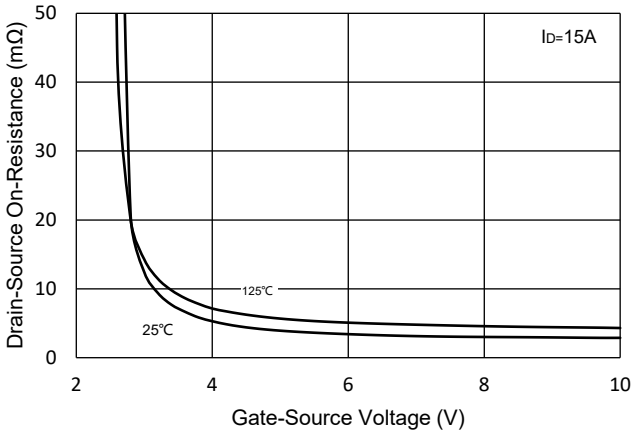

Fig. 4 - $R_{DS(ON)}$—I_D

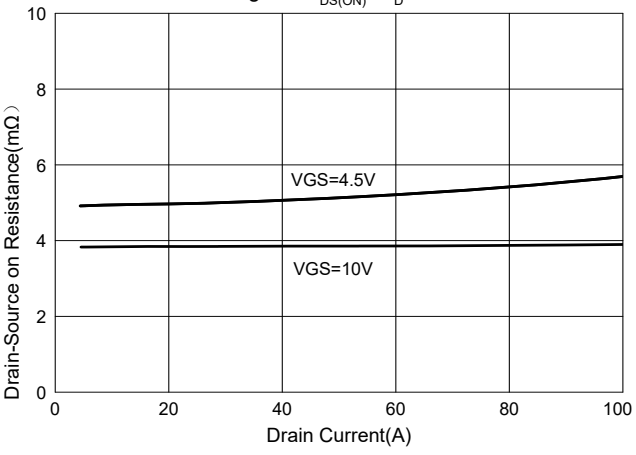

Fig.5-Capacitance Characteristics

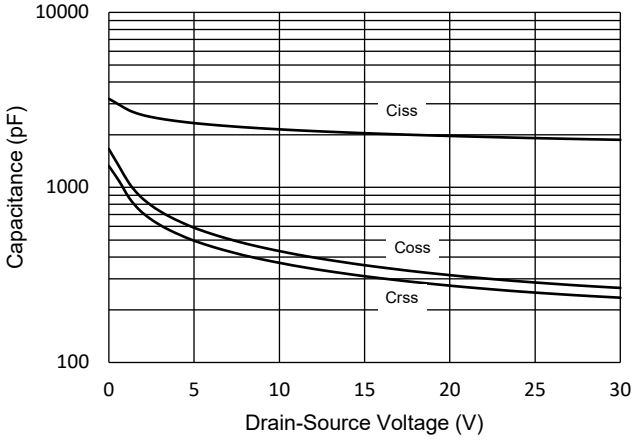

Fig.6-Gate Charge

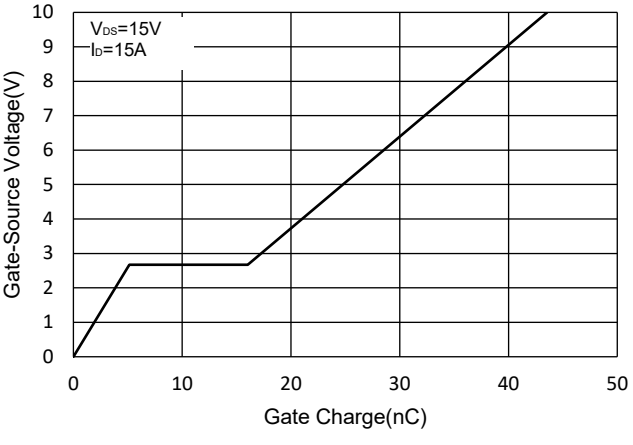

Curve Characteristics

Fig. 7 - Nomalized Threshold Voltage

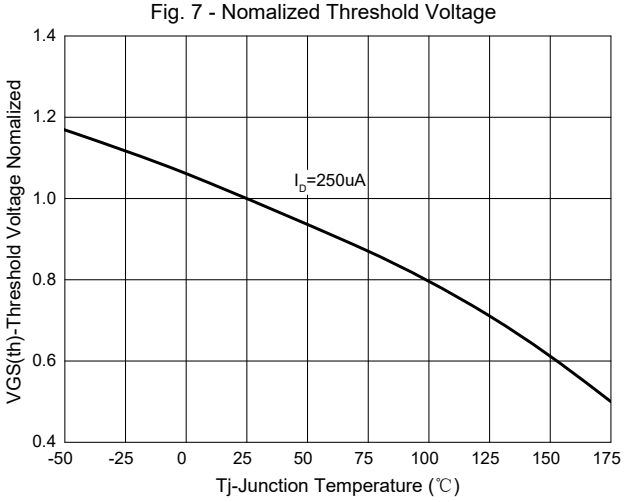

Fig.8-Normalized On Resistance Characteristics

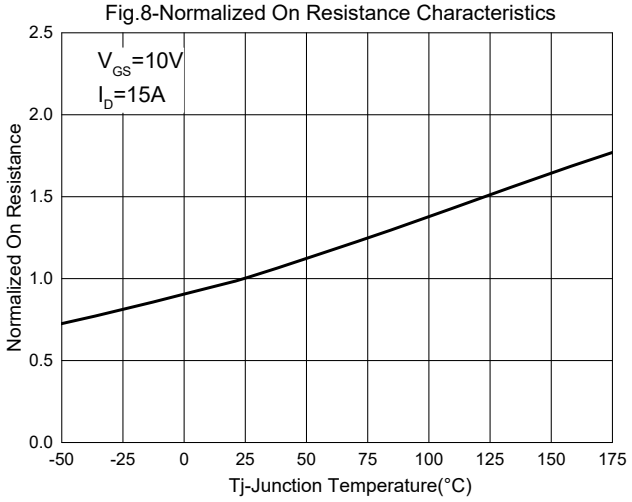

Fig.9-IS-VSD

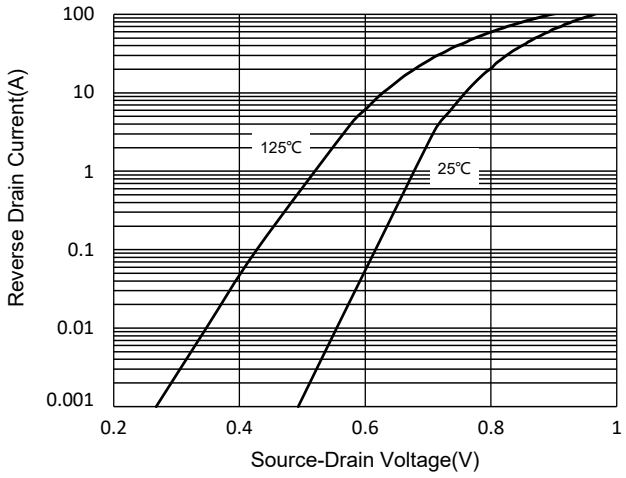

Fig. 10 - Drain Current

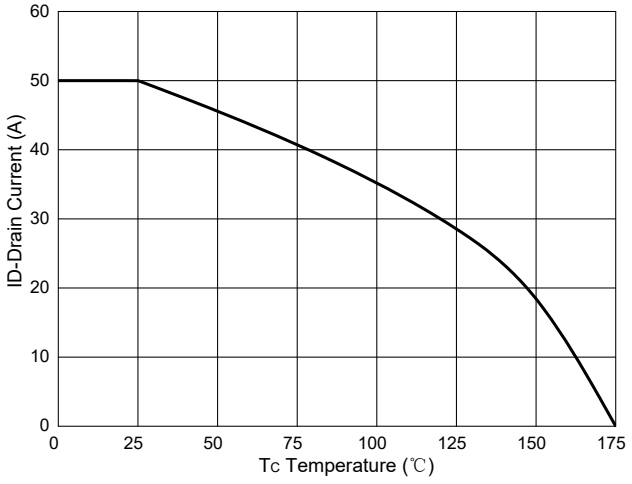

Fig.11-PD Dissipation

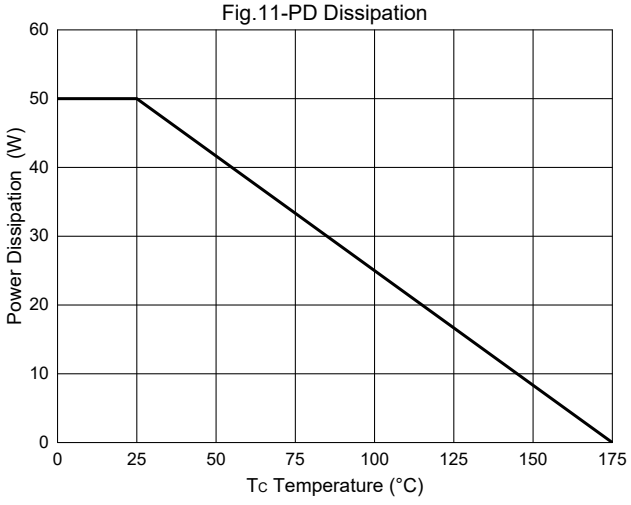

Curve Characteristics

Fig. 12 - Safe Operation Area

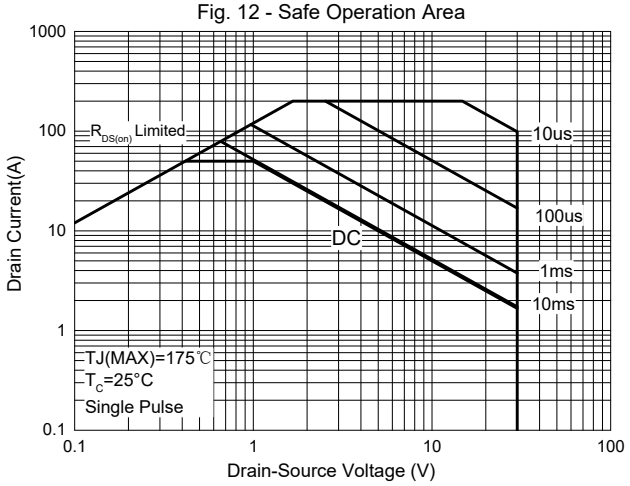

Fig. 13 -Normalized Transient Thermal Impedance

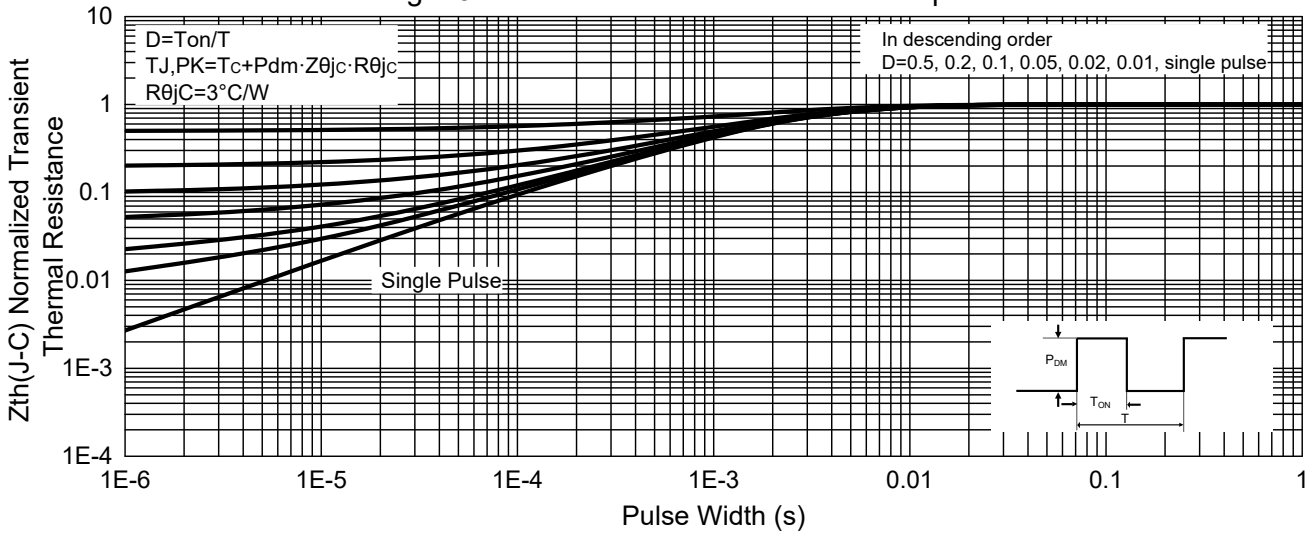

Ordering Information

Device	Packing
Part Number-TP	Tape&Reel: 5Kpcs/Reel

*****IMPORTANT NOTICE*****

Micro Commercial Components Corp. reserves the right to make changes without further notice to any product herein to make corrections, modifications , enhancements , improvements , or other changes . ***Micro Commercial Components Corp*** . does not assume any liability arising out of the application or use of any product described herein; neither does it convey any license under its patent rights ,nor the rights of others . The user of products in such applications shall assume all risks of such use and will agree to hold ***Micro Commercial Components Corp*** . and all the companies whose products are represented on our website, harmless against all damages. ***Micro Commercial Components Corp***. products are sold subject to the general terms and conditions of commercial sale, as published at
https://www.mccsemi.com/Home/TermsAndConditions.

*****LIFE SUPPORT*****

MCC's products are not authorized for use as critical components in life support devices or systems without the express written approval of Micro Commercial Components Corporation.

*****CUSTOMER AWARENESS*****

Counterfeiting of semiconductor parts is a growing problem in the industry. Micro Commercial Components (MCC) is taking strong measures to protect ourselves and our customers from the proliferation of counterfeit parts. MCC strongly encourages customers to purchase MCC parts either directly from MCC or from Authorized MCC Distributors who are listed by country on our web page cited below. Products customers buy either from MCC directly or from Authorized MCC Distributors are genuine parts, have full traceability, meet MCC's quality standards for handling and storage. **MCC will not provide any warranty coverage or other assistance for parts bought from Unauthorized Sources**. MCC is committed to combat this global problem and encourage our customers to do their part in stopping this practice by buying direct or from authorized distributors.

ENTEGRECİ

Bu belge www.entegreci.com üzerinden sunulmaktadır.

Elektronik komponent tedarikinde Entegreci

Entegreci, Eskişehir merkezli, Türkiye geneline satış yapan bir elektronik komponent mağazasıdır. Entegreler (IC), mikrodenetleyiciler, transistörler, diyotlar, pasif elemanlar, konnektörler, modüller ve geliştirme kartları tek adetten seri üretim adetlerine kadar satılır. Ürün sayfalarında güncel stok durumunu, fiyatı ve datasheet bağlantısını bulabilirsiniz.

Parça koduyla arama

Üretici parça numarasını yazın; stok ve fiyatı hemen görün.

www.entegreci.com

Ürün kategorileri

Entegreden kapasitöre tüm elektronik komponent kategorileri.

Kategorilere göz atın

Üreticiler

Aradığınız üreticinin ürünlerini tek sayfada inceleyin.

Üreticileri görün

Toplu alım ve teklif

Listede olmayan ya da yüksek adetli parçalar için teklif isteyin.

Teklif isteyin

www.entegreci.com | **destek@entegreci.com** | **0850 305 90 34**

Entegreci is an online electronic components store based in Türkiye. Search by manufacturer part number to see stock, prices and datasheets for integrated circuits, microcontrollers, transistors, passive components and connectors, or request a quote for parts that are not listed.

Bu sayfa Entegreci tarafından eklenmiştir. Belgenin önceki sayfaları asıl yayıncısına aittir ve içeriği değiştirilmemiştir; en güncel sürüm için belgenin yayıncısına başvurun.