MC33775A

14 cells battery cell controller IC

Rev. 2 — 17 July 2023 Product short data sheet

1 Product profile

1.1 General description

The MC33775A is a lithium-ion battery cell controller IC designed for automotive applications, such as hybrid electric vehicle (HEV) and electric vehicle (EV). It can be used in industrial applications, such as energy storage system (ESS) and uninterruptible power supply (UPS) systems. The device measures differential high precision cell voltages as well as temperatures. Additionally, the device provides an extensive set of passive cell voltage balancing features to equalize the individual cell voltages across the battery stack. The device offers serial peripheral interface (SPI) and an isolated daisy chain interface for communication with the host MCU. The MC33775A offers increased safety level and a low bill of materials.

1.2 Features and benefits

- AEC-Q100 grade 1 qualified: −40 °C to +125 °C ambient temperature range
- ISO 26262 ASIL D support for cell voltage, module voltage, and temperature measurements
- Cell voltage measurement
  - 4 to 14 cells per device
  - Supports bus bars with ±5 V input voltage
  - 16-bit resolution and ±1 mV typical measurement accuracy with ultra low long-term drift
  - 120 µs synchronicity of cell voltage measurements
  - Integrated configurable digital filter
- External temperature and auxiliary voltage measurements
  - Eight analog inputs
  - 5 V input range, configurable as absolute or ratiometric
  - 16-bit resolution and ±5 mV typical measurement accuracy
  - Integrated configurable digital filter
- Module voltage measurement
  - 9.6 V to 65 V input range
  - 16-bit resolution and 0.3 % measurement accuracy
  - Integrated configurable digital filter
- Internal measurement
  - Two redundant internal temperature sensors
  - Supply voltages
  - External transistor current
- Cell voltage balancing
  - 14 internal balancing field effect transistors (FETs), up to 300 mA per channel (max)
  - Simultaneous passive balancing of all channels
  - Global balancing timeout timer
  - Timer controlled balancing with individual timers with 10 s resolution and up to 45 h duration
  - Voltage controlled balancing with two thresholds to stop the affected cell or stop all balancing
  - Temperature controlled balancing; if balancing resistors are in overtemperature, balancing is interrupted

  - Pulse width modulation (PWM) controlled balancing
  - Balancing auto pause during measurement
  - Global pre-balancing delay
  - Automatic discharge of the battery pack (emergency discharge)
- I^2C-bus master interface to control external devices, for example, EEPROMs and security ICs
- Configurable alarm output
- Cyclic wake-up to supervise the pack during sleep and balancing
- Host interface supporting SPI or transformer physical layer 3 (TPL3)
  - 2 Mbit data rate for TPL3 interface
  - 4 Mbit data rate for SPI
- TPL3 communication supports
  - Two-wire daisy chain with capacitive and inductive isolation
  - Protocol supporting up to six daisy chains and 62 nodes per chain
- Unique device ID
- Operation modes
  - Active mode
  - Sleep mode
  - Cyclic mode
  - Deep sleep mode

2 Ordering information

Table 1. Ordering information

Type number	Package		
	Name	Description	Version
MC33775ATA1AE	LQFP64	plastic, thermal enhanced low profile quad flat package; 64 terminals; 0.50 mm pitch; 10 x 10 x 1.4 mm body	SOT1510-2

2.1 Ordering options

Table 2. Part numbers

Type number	Description
MC33775ATA1AE	TPL interface
Not available	SPI

All information provided in this document is subject to legal disclaimers.

© 2023 NXP B.V. All rights reserved.

3 Block diagram

Figure 1 shows the general architecture of the MC33775A.

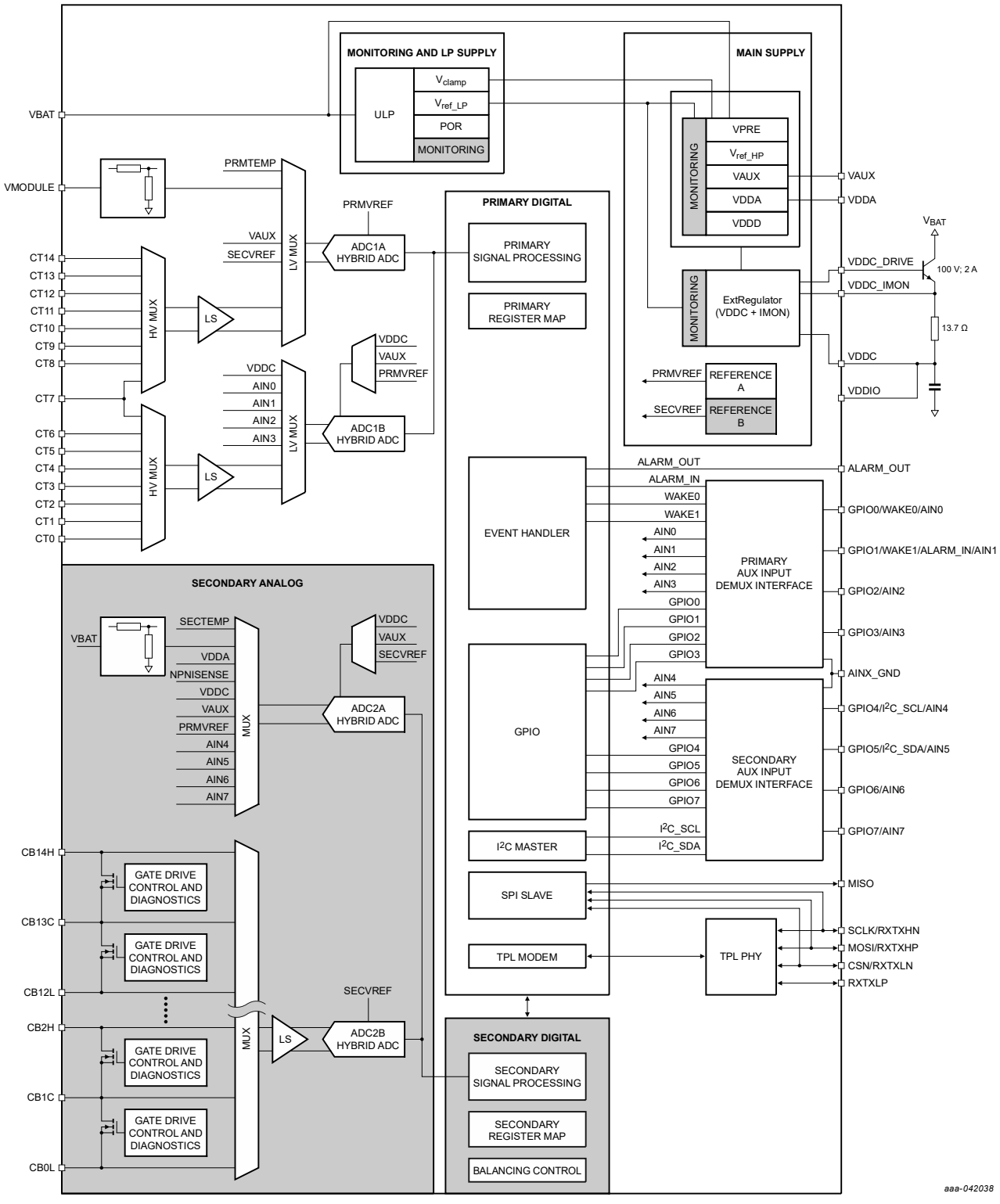

Figure 1. Block diagram

All information provided in this document is subject to legal disclaimers.

© 2023 NXP B.V. All rights reserved.

4 Limiting values

4.1 Characteristics

Table 3. Limiting vales

In accordance with the Absolute Maximum Rating System (IEC 60134).

Symbol	Parameter	Conditions	Min	Typ	Max	Unit
V_{BAT}	battery supply voltage		−0.3	-	+75	V
V_{module}	module voltage measurement input		−0.3	-	+75	V
$V_{I(CTn)}$	cell terminal input voltage	n = 0 to 14	−0.3	-	(n + 1) × 5	V
$V_{dif(CT)}$	cell terminal input differential voltage		−7	-	+10	V
$I_{I(CTn)}$	cell terminal input current	open load detection disabled	−500	-	+500	nA
$V_{bal(CTn)H}$	cell terminal balance voltage high input	n ≥ 2; n belongs to even numbers	−0.3	-	(n + 1) × 5	V
$V_{bal(CTn)C}$	cell terminal balance voltage common balancing	n ≥ 1; n belongs to odd numbers	−0.3	-	(n + 1) × 5	V
$V_{bal(CTn)L}$	cell terminal balance voltage low input	n ≥ 0; n belongs to even numbers	−0.3	-	(n + 2) × 5	V
$V_{I(dif)bal}$	balancing input differential voltage		−0.3	-	+10	V
$I_{I(bal)}$	input current on balancing pins		-	-	330	mA
V_{DDA}	analog supply voltage		−0.3	-	+3.1	V
V_{DDC}	digital supply voltage		−0.3	-	+5.8	V
V_{DDIO}	I/O supply voltage		−0.3	-	+5.8	V
V_{AUX}	auxiliary voltage		−0.3	-	+5.8	V
V_{GPIOn}	voltage on GPIO pins		−0.3	-	V_{VDDC} + 0.5	V
V_{ALARM_OUT}	ALARM_OUT voltage		−0.3	-	V_{VDDIO} + 0.5	V
$V_{bus(TPL)}$	voltage on TPL communication bus pins	relative to pin VSSC	−10	-	+10	V
V_{RESET}	voltage on RESET pin		−0.3	-	+6.5	V
$V_{I(IMON_VDDC)}$	input voltage on IMON_VDDC pin		−0.3	-	+7	V
$V_{I(DRIVE_VDDC)}$	input voltage on DRIVE_VDDC pin		−0.3	-	+7	V
Thermal maximum ratings						
T_j	junction temperature		−40	-	+165	°C
T_{stg}	storage temperature		−55	-	+150	°C

All information provided in this document is subject to legal disclaimers.

© 2023 NXP B.V. All rights reserved.

Table 3. Limiting vales*...continued*

In accordance with the Absolute Maximum Rating System (IEC 60134).

Symbol	Parameter	Conditions	Min	Typ	Max	Unit
$T_{reflow(peak)}$	peak reflow temperature	Pin soldering temperature limit is for 10 s maximum duration. Not designed for immersion soldering.	-	-	260	°C
ESD ratings						
V_{ESD1}	electrostatic discharge voltage	at any pin; human body model (HBM): according to AEC-Q100-002 (100 pF, 1.5 kΩ)	−2	-	+2	kV
V_{ESD2}	electrostatic discharge voltage	at pin VBAT, CTx, VMODULE, CBx, VDDIO, VDDC, VSSC, CSN_RXTXLN, RXTXLP, MOSI_RXTXHP, SCLK_RXTXHN, GPIOx, ALARM_OUT, VSSD, RESET, VAUX, VSSA, AINX_GND, GNDSUB, GNDFLAG; HBM: according to AEC-Q100-002 (100 pF, 1.5 kΩ)	−4	-	+4	kV
V_{ESD3}	electrostatic discharge voltage	at all pins; charged device model (CDM): according to AEC-Q100-011 (field induced charge; 4 pF)	−500	-	+500	V
V_{ESD4}	electrostatic discharge voltage	at corner pins; CDM: according to AEC-Q100-011 (field induced charge; 4 pF)	−750	-	+750	V
V_{ESD5}	electrostatic discharge voltage	at pin VBAT, CTx, VMODULE, CBx, VDDIO, VDDC, VSSC, CSN_RXTXLN, RXTXLP, MOSI_RXTXHP, SCLK_RXTXHN, GPIOx, ALARM_OUT, VSSD, RESET, VAUX, VSSA, AINX_GND, GNDSUB, GNDFLAG; according to IEC 61000-4-2, unpowered (150 pF, 300 Ω) with recommended ESD capacitors as in section application information	−8	-	+8	kV
V_{ESD6}	electrostatic discharge voltage	at pin VBAT, CTx, VMODULE, CBx, VDDIO, VDDC, VSSC, CSN_RXTXLN, RXTXLP, MOSI_RXTXHP, SCLK_RXTXHN, GPIOx, ALARM_OUT, VSSD, RESET, VAUX, VSSA,	−8	-	+8	kV

All information provided in this document is subject to legal disclaimers.

© 2023 NXP B.V. All rights reserved.

Table 3. Limiting vales*...continued*

In accordance with the Absolute Maximum Rating System (IEC 60134).

Symbol	Parameter	Conditions	Min	Typ	Max	Unit
		AINX_GND, GNDSUB, GNDFLAG; according to ISO 10605:2009 (150 pF, 2 kΩ) powered and unpowered; with recommended ESD capacitors as in section application information				

All information provided in this document is subject to legal disclaimers.

© 2023 NXP B.V. All rights reserved.

5 Revision history

Table 4. Revision history

Document ID	Release date	Short data sheet status	Change notice	Supersedes
MC33775A_SDS v.2.1	20230717	Product short data sheet	-	MC33775A_SDS v.2
Modifications:	Table 1 and Table 2: changed			
MC33775A_SDS v.2	20230613	Product short data sheet	-	MC33775A_SDS v.1
MC33775A_SDS v.1	20220204	Preliminary short data sheet	-	-

All information provided in this document is subject to legal disclaimers.

© 2023 NXP B.V. All rights reserved.

6 Legal information

6.1 Data sheet status

Document status[1][2]	Product status[3]	Definition
Objective [short] data sheet	Development	This document contains data from the objective specification for product development.
Preliminary [short] data sheet	Qualification	This document contains data from the preliminary specification.
Product [short] data sheet	Production	This document contains the product specification.

[1] Please consult the most recently issued document before initiating or completing a design.
[2] The term 'short data sheet' is explained in section "Definitions".
[3] The product status of device(s) described in this document may have changed since this document was published and may differ in case of multiple devices. The latest product status information is available on the Internet at URL http://www.nxp.com.

6.2 Definitions

Draft — A draft status on a document indicates that the content is still under internal review and subject to formal approval, which may result in modifications or additions. NXP Semiconductors does not give any representations or warranties as to the accuracy or completeness of information included in a draft version of a document and shall have no liability for the consequences of use of such information.

Short data sheet — A short data sheet is an extract from a full data sheet with the same product type number(s) and title. A short data sheet is intended for quick reference only and should not be relied upon to contain detailed and full information. For detailed and full information see the relevant full data sheet, which is available on request via the local NXP Semiconductors sales office. In case of any inconsistency or conflict with the short data sheet, the full data sheet shall prevail.

Product specification — The information and data provided in a Product data sheet shall define the specification of the product as agreed between NXP Semiconductors and its customer, unless NXP Semiconductors and customer have explicitly agreed otherwise in writing. In no event however, shall an agreement be valid in which the NXP Semiconductors product is deemed to offer functions and qualities beyond those described in the Product data sheet.

6.3 Disclaimers

Limited warranty and liability — Information in this document is believed to be accurate and reliable. However, NXP Semiconductors does not give any representations or warranties, expressed or implied, as to the accuracy or completeness of such information and shall have no liability for the consequences of use of such information. NXP Semiconductors takes no responsibility for the content in this document if provided by an information source outside of NXP Semiconductors.

In no event shall NXP Semiconductors be liable for any indirect, incidental, punitive, special or consequential damages (including - without limitation - lost profits, lost savings, business interruption, costs related to the removal or replacement of any products or rework charges) whether or not such damages are based on tort (including negligence), warranty, breach of contract or any other legal theory.

Notwithstanding any damages that customer might incur for any reason whatsoever, NXP Semiconductors' aggregate and cumulative liability towards customer for the products described herein shall be limited in accordance with the Terms and conditions of commercial sale of NXP Semiconductors.

Right to make changes — NXP Semiconductors reserves the right to make changes to information published in this document, including without limitation specifications and product descriptions, at any time and without notice. This document supersedes and replaces all information supplied prior to the publication hereof.

Applications — Applications that are described herein for any of these products are for illustrative purposes only. NXP Semiconductors makes no representation or warranty that such applications will be suitable for the specified use without further testing or modification.

Customers are responsible for the design and operation of their applications and products using NXP Semiconductors products, and NXP Semiconductors accepts no liability for any assistance with applications or customer product design. It is customer's sole responsibility to determine whether the NXP Semiconductors product is suitable and fit for the customer's applications and products planned, as well as for the planned application and use of customer's third party customer(s). Customers should provide appropriate design and operating safeguards to minimize the risks associated with their applications and products.

NXP Semiconductors does not accept any liability related to any default, damage, costs or problem which is based on any weakness or default in the customer's applications or products, or the application or use by customer's third party customer(s). Customer is responsible for doing all necessary testing for the customer's applications and products using NXP Semiconductors products in order to avoid a default of the applications and the products or of the application or use by customer's third party customer(s). NXP does not accept any liability in this respect.

Limiting values — Stress above one or more limiting values (as defined in the Absolute Maximum Ratings System of IEC 60134) will cause permanent damage to the device. Limiting values are stress ratings only and (proper) operation of the device at these or any other conditions above those given in the Recommended operating conditions section (if present) or the Characteristics sections of this document is not warranted. Constant or repeated exposure to limiting values will permanently and irreversibly affect the quality and reliability of the device.

Terms and conditions of commercial sale — NXP Semiconductors products are sold subject to the general terms and conditions of commercial sale, as published at http://www.nxp.com/profile/terms, unless otherwise agreed in a valid written individual agreement. In case an individual agreement is concluded only the terms and conditions of the respective agreement shall apply. NXP Semiconductors hereby expressly objects to applying the customer's general terms and conditions with regard to the purchase of NXP Semiconductors products by customer.

No offer to sell or license — Nothing in this document may be interpreted or construed as an offer to sell products that is open for acceptance or the grant, conveyance or implication of any license under any copyrights, patents or other industrial or intellectual property rights.

Quick reference data — The Quick reference data is an extract of the product data given in the Limiting values and Characteristics sections of this document, and as such is not complete, exhaustive or legally binding.

Export control — This document as well as the item(s) described herein may be subject to export control regulations. Export might require a prior authorization from competent authorities.

All information provided in this document is subject to legal disclaimers.

© 2023 NXP B.V. All rights reserved.

Translations — A non-English (translated) version of a document, including the legal information in that document, is for reference only. The English version shall prevail in case of any discrepancy between the translated and English versions.

Security — Customer understands that all NXP products may be subject to unidentified vulnerabilities or may support established security standards or specifications with known limitations. Customer is responsible for the design and operation of its applications and products throughout their lifecycles to reduce the effect of these vulnerabilities on customer's applications and products. Customer's responsibility also extends to other open and/or proprietary technologies supported by NXP products for use in customer's applications. NXP accepts no liability for any vulnerability. Customer should regularly check security updates from NXP and follow up appropriately.

Customer shall select products with security features that best meet rules, regulations, and standards of the intended application and make the ultimate design decisions regarding its products and is solely responsible for compliance with all legal, regulatory, and security related requirements concerning its products, regardless of any information or support that may be provided by NXP.

NXP has a Product Security Incident Response Team (PSIRT) (reachable at PSIRT@nxp.com) that manages the investigation, reporting, and solution release to security vulnerabilities of NXP products.

Suitability for use in automotive applications (functional safety) — This NXP product has been qualified for use in automotive applications. It has been developed in accordance with ISO 26262, and has been ASIL classified accordingly. If this product is used by customer in the development of, or for incorporation into, products or services (a) used in safety critical applications or (b) in which failure could lead to death, personal injury, or severe physical or environmental damage (such products and services hereinafter referred to as "Critical Applications"), then customer makes the ultimate design decisions regarding its products and is solely responsible for compliance with all legal, regulatory, safety, and security related requirements concerning its products, regardless of any information or support that may be provided by NXP. As such, customer assumes all risk related to use of any products in Critical Applications and NXP and its suppliers shall not be liable for any such use by customer. Accordingly, customer will indemnify and hold NXP harmless from any claims, liabilities, damages and associated costs and expenses (including attorneys' fees) that NXP may incur related to customer's incorporation of any product in a Critical Application.

NXP B.V. — NXP B.V. is not an operating company and it does not distribute or sell products.

6.4 Licenses

Purchase of NXP ICs with NFC technology — Purchase of an NXP Semiconductors IC that complies with one of the Near Field Communication (NFC) standards ISO/IEC 18092 and ISO/IEC 21481 does not convey an implied license under any patent right infringed by implementation of any of those standards. Purchase of NXP Semiconductors IC does not include a license to any NXP patent (or other IP right) covering combinations of those products with other products, whether hardware or software.

6.5 Trademarks

Notice: All referenced brands, product names, service names, and trademarks are the property of their respective owners.

NXP — wordmark and logo are trademarks of NXP B.V.

All information provided in this document is subject to legal disclaimers.

© 2023 NXP B.V. All rights reserved.

Contents

1 Product profile 1
1.1 General description 1
1.2 Features and benefits 1
2 Ordering information 2
2.1 Ordering options 2
3 Block diagram 3
4 Limiting values 4
4.1 Characteristics 4
5 Revision history 7
6 Legal information 8

Please be aware that important notices concerning this document and the product(s) described herein, have been included in section 'Legal information'.

© 2023 NXP B.V. **All rights reserved.**

For more information, please visit: http://www.nxp.com

Date of release: 17 July 2023
Document identifier: MC33775A_SDS

ENTEGRECİ

Bu belge www.entegreci.com üzerinden sunulmaktadır.

Elektronik komponent tedarikinde Entegreci

Entegreci, Eskişehir merkezli, Türkiye geneline satış yapan bir elektronik komponent mağazasıdır. Entegreler (IC), mikrodenetleyiciler, transistörler, diyotlar, pasif elemanlar, konnektörler, modüller ve geliştirme kartları tek adetten seri üretim adetlerine kadar satılır. Ürün sayfalarında güncel stok durumunu, fiyatı ve datasheet bağlantısını bulabilirsiniz.

Parça koduyla arama

Üretici parça numarasını yazın; stok ve fiyatı hemen görün.

www.entegreci.com

Ürün kategorileri

Entegreden kapasitöre tüm elektronik komponent kategorileri.

Kategorilere göz atın

Üreticiler

Aradığınız üreticinin ürünlerini tek sayfada inceleyin.

Üreticileri görün

Toplu alım ve teklif

Listede olmayan ya da yüksek adetli parçalar için teklif isteyin.

Teklif isteyin

www.entegreci.com | **destek@entegreci.com** | **0850 305 90 34**

Entegreci is an online electronic components store based in Türkiye. Search by manufacturer part number to see stock, prices and datasheets for integrated circuits, microcontrollers, transistors, passive components and connectors, or request a quote for parts that are not listed.

Bu sayfa Entegreci tarafından eklenmiştir. Belgenin önceki sayfaları asıl yayıncısına aittir ve içeriği değiştirilmemiştir; en güncel sürüm için belgenin yayıncısına başvurun.