

MC33772B

Battery cell controller IC

Rev. 6.0 — 2 April 2020 Short data sheet: technical data

1 General description

The 33772 is a SMARTMOS lithium-ion battery cell controller IC designed for automotive applications, such as hybrid electric (HEV) and electric vehicles (EV) along with industrial applications, such as energy storage systems (ESS) and uninterruptible power supply (UPS) systems.

The device performs ADC conversions of the differential cell voltages and current, as well as battery coulomb counting and battery temperature measurements. The information is digitally transmitted through the Serial Peripheral Interface (SPI) or Transformer Isolation (TPL) to a microcontroller for processing.

2 Features

- 5.0 V ≤ V_{PWR} ≤ 30 V operation, 40 V transient
- 3 to 6 cells management
- 0.8 mV total cell voltage measurement error
- Isolated 2.0 Mbps differential communication or 4.0 Mbps SPI
- Addressable on initialization
- Synchronized cell voltage/current measurement with coulomb count
- Total stack voltage measurement
- Seven GPIO/temperature sensor inputs
- 5.0 V reference supply output with 5 mA capability
- Automatic over/undervoltage and temperature detection routable to fault pin
- Integrated sleep mode over/undervoltage and temperature monitoring
- Onboard 300 mA passive cell balancing with diagnostics
- Hot plug capable
- Detection of internal and external faults, as open lines, shorts, and leakages
- Designed to support ISO 26262 up to ASIL D safety system
- Fully compatible with the MC33771 for a maximum of 14 cells
- Qualified in compliance with AEC-Q100

3 Simplified application diagram

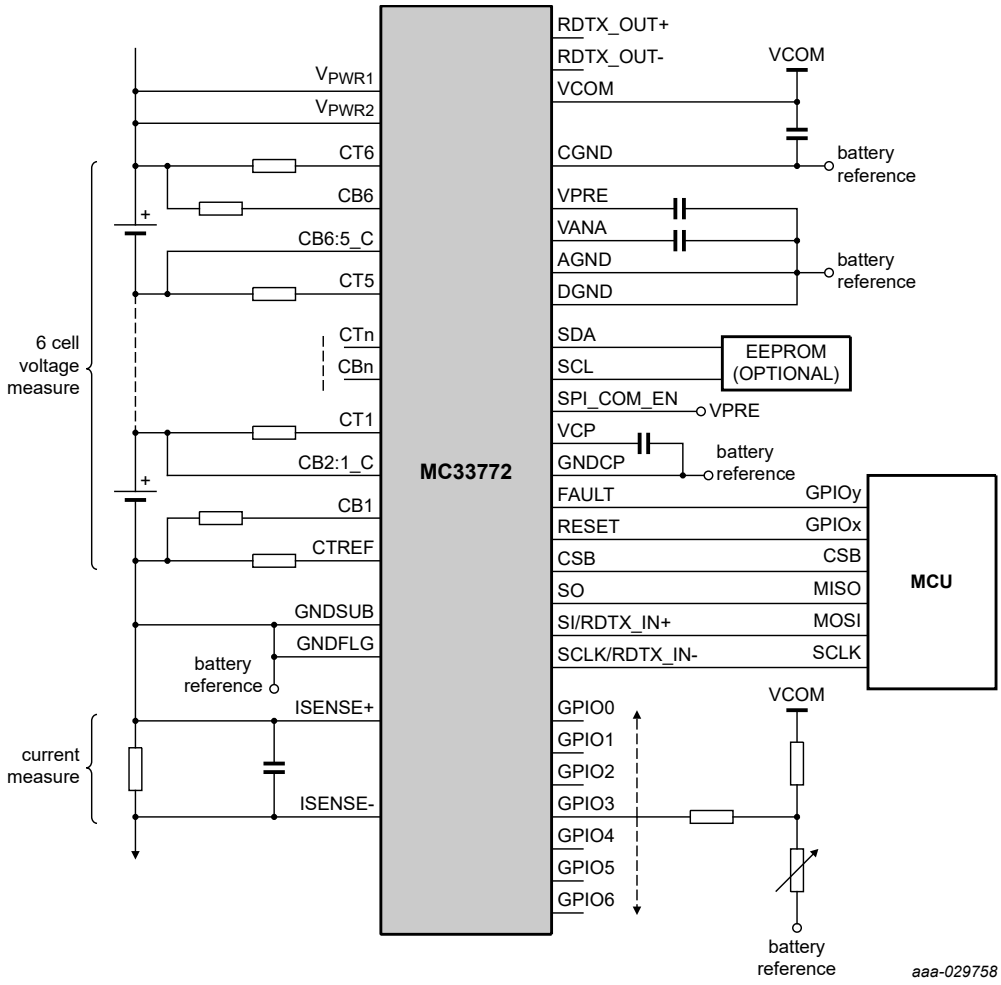

Figure 1. Simplified application diagram, SPI use case

All information provided in this document is subject to legal disclaimers.

© NXP B.V. 2020. All rights reserved.

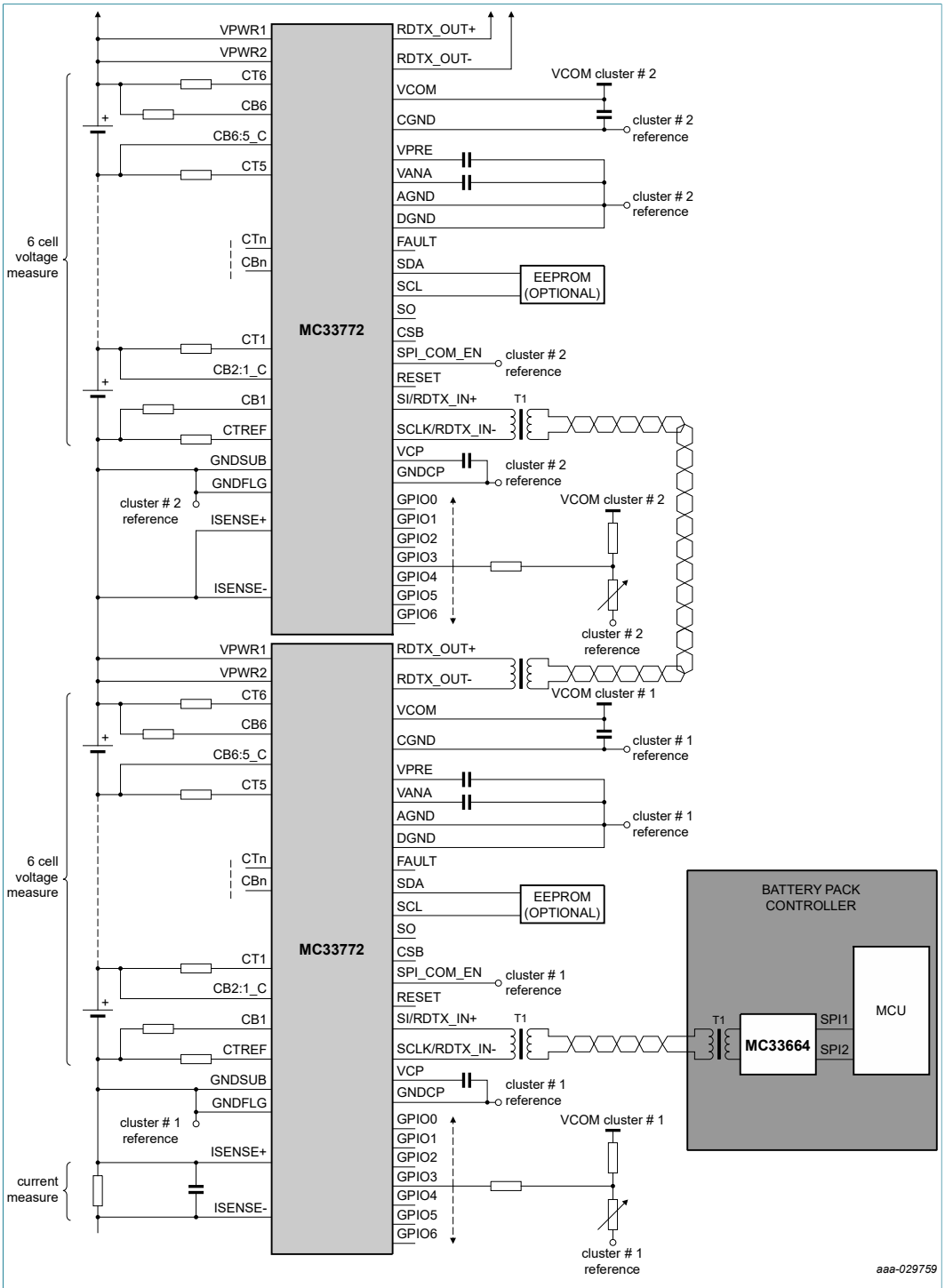

Figure 2. Simplified application diagram, TPL use case

All information provided in this document is subject to legal disclaimers.

© NXP B.V. 2020. All rights reserved.

4 Applications

- Automotive: 12 V to high-voltage battery packs
- E-bikes, e-scooters
- Energy Storage Systems (ESS)
- Uninterruptible Power Supply (UPS)
- Battery junction box

5 Ordering information

5.1 Part numbers definition

MC33772B x y z AE/R2

Table 1. Part number breakdown

Code	Option	Description
x	S	x = S (SPI communication type)
	T	x = T (TPL communication type)
y	A	y = A (Advanced)
	B	y = B (Basic)
	C	y = C (Current)
	P	y = P (Premium)
z	0	z = 0 (0 channels)
	1	z = 1 (3 to 6 channels)
	2	z = 2 (3 to 4 channels)
	AE	Package suffix
	R2	Tape and reel indicator

All information provided in this document is subject to legal disclaimers.

© NXP B.V. 2020. All rights reserved.

5.2 Part numbers list

This section describes the part numbers available to be purchased along with their differences. Valid orderable part numbers are provided at http://www.nxp.com.

Table 2. Orderable part variations

Part Number[1]	Precise differential cell voltage		Number of monitored cells	Cell balancing	Precision GPIO as temperature measurement channel and OT/UT	Functional verification and diagnostics	Current measurement channel and coulomb counter	Communication	
	CTx	Cell OV/UV						SPI	TPL
MC33772BSA1AE	Yes	Yes	3 to 6	Yes	Yes	Yes	No	Yes	No
MC33772BSA2AE	Yes	Yes	3 to 4	Yes	Yes	Yes	No	Yes	No
MC33772BSP1AE	Yes	Yes	3 to 6	Yes	Yes	Yes	Yes	Yes	No
MC33772BSP2AE	Yes	Yes	3 to 4	Yes	Yes	Yes	Yes	Yes	No
MC33772BTA1AE	Yes	Yes	3 to 6	Yes	Yes	Yes	No	Yes	Yes
MC33772BTA2AE	Yes	Yes	3 to 4	Yes	Yes	Yes	No	Yes	Yes
MC33772BTB1AE	Yes	Yes	3 to 6	No	No	No	No	Yes	Yes
MC33772BTC0AE	No	No	0	No	Yes	Yes	Yes	Yes	Yes
MC33772BTP1AE	Yes	Yes	3 to 6	Yes	Yes	Yes	Yes	Yes	Yes
MC33772BTP2AE	Yes	Yes	3 to 4	Yes	Yes	Yes	Yes	Yes	Yes

[1] To order parts in tape and reel, add an R2 suffix to the part number.

All information provided in this document is subject to legal disclaimers.

© NXP B.V. 2020. All rights reserved.

6 Pinning information

6.1 Pinout diagram

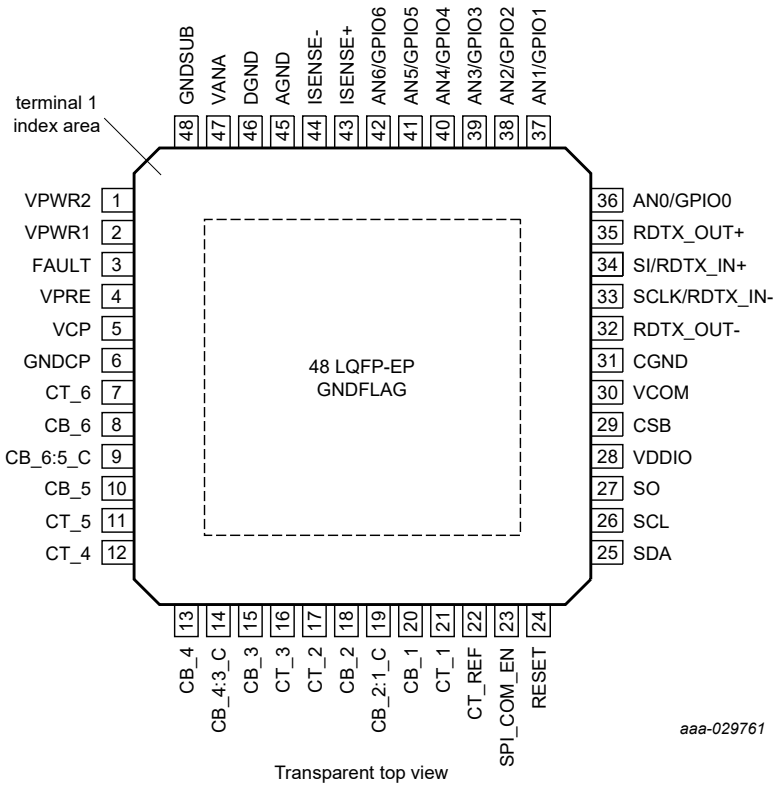

Figure 3. Pinout diagram

6.2 Pin definitions

Table 3. Pin definitions

Pin number	Pin name	Pin function	Definition
1	VPWR2	Input	Power supply input to the 33772
2	VPWR1	Input	Power supply input to the 33772
3	FAULT	Output	Fault output dependent on user defined internal or external faults. If not used, it must be left open.
4	VPRE	Output	Pre-regulator voltage. Connect to 470 nF capacitor.
5	VCP	Output	Charge pump capacitor ground, decouple with 10 nF.
6	GNDCP	Ground	Charge pump capacitor ground
7	CT_6	Input	Cell terminal pin 6 input. Terminate to LPF resistor.
8	CB_6	Output	Cell balance driver. Terminate to cell 6 cell balance load resistor.
9	CB_6:5_C	Output	Cell balance 6:5 common. Terminate to cell 6 and 5 common pin.
10	CB_5	Output	Cell balance driver. Terminate to cell 5 cell balance load resistor.
11	CT_5	Input	Cell terminal pin 5 input. Terminate to LPF resistor.
12	CT_4	Input	Cell terminal pin 4 input. Terminate to LPF resistor.
13	CB_4	Output	Cell balance driver. Terminate to cell 4 cell balance load resistor.

All information provided in this document is subject to legal disclaimers.

© NXP B.V. 2020. All rights reserved.

Pin number	Pin name	Pin function	Definition
14	CB_4:3_C	Output	Cell balance 4:3 common. Terminate to cell 4 and 3 common pin.
15	CB_3	Output	Cell balance driver. Terminate to cell 3 cell balance load resistor.
16	CT_3	Input	Cell terminal pin 3 input. Terminate to LPF resistor.
17	CT_2	Input	Cell pin 2 input. Terminate to LPF resistor.
18	CB_2	Output	Cell balance driver. Terminate to cell 2 cell balance load resistor.
19	CB_2:1_C	Output	Cell balance 2:1 common. Terminate to cell 2 and 1 common pin.
20	CB_1	Output	Cell balance driver. Terminate to cell 1 cell balance load resistor.
21	CT_1	Input	Cell pin 1 input. Terminate to LPF resistor.
22	CT_REF	Input	Cell terminal REF input. Terminate to LPF resistor.
23	SPI_COM_EN	Input	SPI communication enable input. Wire to VPRE to use SPI communication, else wire to ground to use TPL communication.
24	RESET	Input	RESET is an active high input. RESET has an internal pull down. If not used, it can be shorted to GND.
25	SDA	I/O	I^2C data
26	SCL	I/O	I^2C clock
27	SO	Output	SPI serial output
28	VDDIO	Input	IO voltage for I^2C and SPI interfaces. Voltage level corresponding to Logic 1 will be the same as VDDIO.
29	CSB	Input	SPI active low chip select. If not used, it must be shorted to ground.
30	VCOM	Output	Communication regulator output, decouple with 2.2 µF to CGND.
31	CGND	Ground	Communication decoupling ground, terminate to GNDSUB.
32	RDTX_OUT−	I/O	TPL receive/transmit output negative
33	SCLK/RDTX_IN-	I/O	SPI clock or TPL receive/transmit input negative
34	SI/RDTX_IN+	I/O	SPI serial input or TPL receive/transmit input positive
35	RDTX_OUT+	I/O	TPL receive/transmit output positive
36	AN0 GPIO0	I/O	General purpose input/output
37	AN1 GPIO1	I/O	General purpose input/output
38	AN2 GPIO2	I/O	General purpose input/output
39	AN3 GPIO3	I/O	General purpose input/output
40	AN4 GPIO4	I/O	General purpose input/output
41	AN5 GPIO5	I/O	General purpose input/output
42	AN6 GPIO6	I/O	General purpose input/output
43	ISENSE+	Input	Current measurement input +
44	ISENSE−	Input	Current measurement input −
45	AGND	I/O	Analog ground, terminate to GNDSUB
46	DGND	I/O	Digital ground, terminate to GNDSUB
47	VANA	Output	Precision ADC analog supply. Decouple with 47 nF capacitor to AGND.
48	GNDSUB	Ground	Ground reference for device, terminate to reference of battery cluster.
49	GNDFLAG	Ground	Exposed pad, terminate to lowest potential of the battery cluster and to heat dissipation area of PCB.

All information provided in this document is subject to legal disclaimers.

© NXP B.V. 2020. All rights reserved.

7 General product characteristics

7.1 Ratings and operating requirements relationship

The operating voltage range pertains to the VPWR pins referenced to the AGND pins.

Table 4. Ratings vs. operating requirements

Fatal range Permanent failure may occur	Lower limited operating range No permanent failure, but IC functionality is not guaranteed	Normal operating range 100 % functional	Upper limited operating range	Fatal range Permanent failure may occur
V_{PWR} < −0.3 V	5.0 V ≤ V_{PWR} ≤ 6.0 V (SPI) 6.4 V ≤ V_{PWR} ≤ 7.0 V (TPL) **Reset range:** –0.3 V ≤ V_{PWR} ≤ 5.0 V (SPI) –0.3 V ≤ V_{PWR} ≤ 6.4 V (TPL) **POR with V_{PWR} falling:** 4.8 V ≤ V_{PWR} < 5.0 V (SPI) 6.1 V ≤ V_{PWR} < 6.4 V (TPL) **POR with V_{PWR} rising:** 5.6 V ≤ V_{PWR} < 6.0 V (SPI) 6.6 V ≤ V_{PWR} < 7.0 V (TPL)	6.0 V ≤ V_{PWR} ≤ 30 V (SPI) 7.0 V ≤ V_{PWR} ≤ 30 V (TPL)	30 V < V_{PWR} ≤ 40 V **IC parameters might be out of specification. Detection of V_{PWR} overvoltage is functional**	40 V < V_{PWR}
	Handling range - No permanent failure			

In both upper and lower limited operating range, no information can be provided about IC performance. Only the detection of V_{PWR} overvoltage is guaranteed in the upper limited operating range.

Performance in normal operating range is guaranteed only if there is a minimum of three battery cells in the stack.

7.2 Maximum ratings

Table 5. Maximum ratings

All voltages are with respect to ground unless otherwise noted. Exceeding these ratings might cause a malfunction or permanent damage to the device.

Symbol	Description (rating)	Min	Max	Unit
Electrical ratings				
VPWR1, VPWR2	Supply input voltage	−0.3	40	V
CT6	Cell terminal voltage	−0.3	40	V
VPWR to CT6	Voltage across VPWR1,2 pins pair and CT6 pin	−10	10	V
CT_N to CT_{N-1}	Cell terminal differential voltage [1]	−0.3	6.7	V
$CT_{N(CURRENT)}$	Cell terminal input current	—	±500	µA
CB_N to $CB_{N:N-1_C}$ $CB_{N:N-1_C}$ to CB_{N-1}	Cell balance differential voltage	—	10	V
CB_{N-1} to CT_{N-1}	Cell balance input to cell terminal input	−10	+10	V
VISENSE	ISENSE+ and ISENSE– pin voltage	−0.5	2.5	V
VCOM	Maximum voltage may be applied to VCOM pin from external source	—	5.8	V
VANA	Maximum voltage may be applied to VANA pin	—	3.1	V

All information provided in this document is subject to legal disclaimers.

© NXP B.V. 2020. All rights reserved.

Symbol	Description (rating)	Min	Max	Unit
VPRE	Maximum voltage which may be applied to VPRE pin from external source	—	7.0	V
VCP	Maximum voltage which may be applied to VCP pin from external source	—	14	V
VDDIO	Maximum voltage which may be applied to VDDIO pin from external source	—	5.8	V
V_{GPIO0}	GPIO0 pin voltage	–0.3	6.5	V
V_{GPIOx}	GPIOx pins (x = 1 to 6) voltage	–0.3	VCOM + 0.5	V
V_{DIG}	Voltage I^2C pins (SDA, SCL)	–0.3	VDDIO + 0.5	V
V_{RESET}	RESET pin	–0.3	6.5	V
V_{CSB}	CSB pin	–0.3	6.5	V
$V_{SPI_COMM_EN}$	SPI_COMM_EN	–0.3	7.0	V
V_{SO}	SO pin	–0.3	VDDIO + 0.5	V
$V_{GPIO5,6}$	Maximum voltage for GPIO5 and GPIO6 pins used as current input	−0.3	2.5	V
FAULT	Maximum applied voltage to pin	−0.3	7.0	V
V_{COMM}	Maximum voltage to pins RDTX_OUT+, RDTX_OUT–, SI/RDTX_IN+, CLK/RDTX_IN–	−10	10	V
f_{SPI}	SPI frequency (SPI mode)	—	4.2	MHz
BR_{TPL}	Transformer communication bit rate (TPL mode)	1.9	2.1	Mbps
f_{TPL}	Transformer signal frequency (TPL mode)	3.8	4.2	MHz
V_{ESD}	ESD voltage			V
	Human body model (HBM)	—	±2000	
	Charge device model (CDM)	—	±500	
	Charge device model corner pins (CDM)	—	±750	
V_{ESD}	ESD voltage (CTx, CBx, GPIOx, ISENSE+, ISENSE–, RDTX_OUT+, RDTX_OUT–, SI/RDTX_IN+, SCLK/ RDTX_IN–) [2]			V
	Human body model (HBM)	—	±4000	
V_{ESD}	ESD voltage (CTREF, CTx,, GPIOx, ISENSE+, ISENSE−, RDTX_ OUT+, RDTX_OUT−, SI/RDTX_IN+, SCLK/ RDTX_IN−)			V
	IEC 61000-4-2, Unpowered (Gun configuration: 330 Ω / 150 pF)	—	±8000	
	HMM, Unpowered (Gun configuration: 330 Ω / 150 pF)	—	±8000	
	ISO 10605:2009, Unpowered (Gun configuration: 2 kΩ / 150 pF)	—	±8000	
	ISO 10605:2009, Powered (Gun configuration: 2 kΩ / 150 pF)	—	±8000	

[1] Adjacent CT pins may experience an overvoltage that exceeds their maximum rating during OV/UV functional verification test or during open line diagnostic test. Nevertheless, the IC is completely tolerant to this special situation.
[2] ESD testing is performed in accordance with the human body model (HBM) (C_{ZAP} = 100 pF, R_{ZAP} = 1500 Ω).

7.3 Thermal characteristics

Table 6. Thermal ratings

All voltages are with respect to ground unless otherwise noted. Exceeding these ratings might cause a malfunction or permanent damage to the device.

Symbol	Description (rating)	Min	Max	Unit
Thermal ratings				
	Operating temperature			°C
T_A	Ambient (SPI application)	–40	+125	
T_A	Ambient (TPL application)	–40	+105	
T_J	Junction	–40	+150	
T_{STG}	Storage temperature	−55	+150	°C
T_{PPRT}	Peak package reflow temperature [1] [2]	—	260	°C
Thermal resistance and package dissipation ratings				

All information provided in this document is subject to legal disclaimers.

© NXP B.V. 2020. All rights reserved.

Symbol	Description (rating)		Min	Max	Unit
$R_{\Theta JB}$	Junction-to-board (bottom exposed pad soldered to board) 48 LQFP EP	[3]	—	11	°C/W
$R_{\Theta JA}$	Junction-to-ambient, natural convection, single-layer board (1s) 48 LQFP EP	[4] [5]	—	72	°C/W
$R_{\Theta JA}$	Junction-to-ambient, natural convection, four-layer board (2s2p) 48 LQFP EP	[4] [5]	—	30	°C/W
$R_{\Theta JCTOP}$	Junction-to-case top (exposed pad) 48 LQFP EP	[6]	—	24	°C/W
$R_{\Theta JCBOTTOM}$	Junction-to-case bottom (exposed pad) 48 LQFP EP	[7]	—	0.98	°C/W
ΨJT	Junction to package top, natural convection	[8]	—	4	°C/W

[1] Pin soldering temperature limit is for 10 seconds maximum duration. Not designed for immersion soldering. Exceeding these limits may cause a malfunction or permanent damage to the device.
[2] NXP's Package Reflow capability meets Pb-free requirements for JEDEC standard J-STD-020C. For Peak Package Reflow Temperature and Moisture Sensitivity Levels (MSL), go to www.nxp.com, search by part number (remove prefixes/suffixes) and enter the core ID to view all orderable parts (MC33xxxD enter 33xxx), and review parametrics.
[3] Thermal resistance between the die and the printed circuit board per JEDEC JESD51-8. Board temperature is measured on the top surface of the board near the package.
[4] Junction temperature is a function of die size, on-chip power dissipation, package thermal resistance, mounting site (board) temperature, ambient temperature, air flow, power dissipation of other components on the board, and board thermal resistance.
[5] Per JEDEC JESD51-6 with the board (JESD51-7) horizontal.
[6] Thermal resistance between the die and the case top surface as measured by the cold plate method (MIL SPEC-883 Method 1012.1), with the cold plate temperature used for the case temperature.
[7] Thermal resistance between the die and the solder pad on the bottom of the package based on simulation without any interface resistance.
[8] Thermal characterization parameter indicating the temperature difference between the package top and the junction temperature per JEDEC JESD51-2. When Greek letter (Ψ) is not available, the thermal characterization parameter is written as Psi-JT.

All information provided in this document is subject to legal disclaimers.

© NXP B.V. 2020. All rights reserved.

7.4 Electrical characteristics

Table 7. Static and dynamic electrical characteristics

Characteristics noted under conditions: 6.0 V ≤ V_{PWR} ≤ 30 V (SPI mode) or 7.0 V ≤ V_{PWR} ≤ 30 V (TPL mode), −40 °C ≤ T_A ≤ 125 °C (SPI mode) or –40 °C ≤ T_A ≤ 105 °C (TPL mode), GND = 0 V, unless otherwise stated. Typical values refer to V_{PWR} = 24 V, T_A = 25 °C, unless otherwise noted.

Symbol	Parameter	Min	Typ	Max	Unit
Power management					
$V_{PWR(FO)}$	Supply voltage				V
	Full parameter specification (SPI application)	6.0	—	30	
	Full parameter specification (TPL application)	7.0	—	30	
I_{VPWR}	Supply current (base value)				mA
	Normal mode, cell balance OFF, ADC inactive, SPI communication inactive, IVCOM = 0 mA	—	6.0	—	
	Normal mode, cell balance OFF, ADC inactive, TPL communication inactive, IVCOM = 0 mA	—	8.0	—	
$I_{VPWR(TPL_TX)}$	Supply current adder when TPL communication active	—	50	—	mA
$I_{VPWR(CBON)}$	Supply current adder to set all 6 cell balance switches ON	—	2.0	—	mA
$I_{VPWR(ADC)}$	Delta supply current to perform ADC conversions (addend)				mA
	ADC1-A,B continuously converting	—	4.7	—	
	ADC2 continuously converting	—	1.0	—	
$I_{VPWR(SS)}$	Supply current in sleep and idle modes, communication inactive, cell balance off, oscillator monitor on, cyclic measurement off				
	SPI mode (TA = 25 °C)	—	32	—	µA
	SPI mode (−40 °C ≤ TA ≤ 85 °C)	—	—	60	
	SPI mode (TA = 125 °C)	—	42	—	
	TPL mode (TA = 25 °C)	—	75	—	
	TPL mode (−40 °C ≤ TA ≤ 85 °C)	—	—	100	
	TPL mode (TA = 125 °C)	—	—	130	
	Except for 20 V < VPWR ≤ 30 V and within 1200 ms since entering into sleep mode from normal mode				
	SPI mode (TA = 25 °C)	—	40	—	µA
	SPI mode (−40 °C ≤ TA ≤ 85 °C)	—	—	75	
	SPI mode (TA = 125 °C)	—	42	—	
	TPL mode (TA = 25 °C)	—	80	—	
	TPL mode (−40 °C ≤ TA ≤ 85 °C)	—	—	120	
	TPL mode (TA = 125 °C)	—	—	130	
$I_{VPWR(CKMON)}$	Clock monitor current consumption	—	5	—	µA
$V_{PWR(OV_FLAG)}$	V_{PWR} overvoltage fault threshold (flag)	—	33.5	—	V
$V_{PWR(LV_FLAG)}$	V_{PWR} low-voltage warning threshold (flag)	—	7.8	—	V
$V_{PWR(UV_POR)}$	V_{PWR} undervoltage shutdown threshold (POR), falling VPWR				V
	SPI mode	—	4.9	—	
	TPL mode	—	6.25	—	

All information provided in this document is subject to legal disclaimers.

© NXP B.V. 2020. All rights reserved.

Symbol	Parameter	Min	Typ	Max	Unit
$V_{PWR(UV_RIS)}$	V_{PWR} undervoltage shutdown threshold (POR), rising VPWR				V
	SPI mode	—	5.8	—	
	TPL mode	—	6.8	—	
$t_{VPWR(FILTER)}$	V_{PWR} OV, LV filter	—	50	—	µs
VPRE power supply					
VPRE	Pre-regulator voltage range - decouple with 470 nF				V
	SPI mode, ILoad = 15 mA	—	5.75	—	
	SPI mode, ILoad = 15 mA, 5.0 ≤ VPWR < 6.0 V	4.9	—	—	
	TPL mode, ILoad = 70 mA	—	6.5	—	
$V_{PRE(UV_TH)}$	PRE undervoltage threshold leading to a reset	—	4.25	—	V
VCP power supply					
VCP	Charge pump voltage range	$2 \times V_{PRE} - 2$	—	$2 \times V_{PRE}$	V
$V_{CP(UV_TH)}$	Undervoltage threshold for VCP minus VPRE	—	1.5	—	V
VDDIO power supply					
V_{DDIO}	IO supply for I^2C and SPI interfaces - voltage range	—	4.15	—	V
VCOM power supply					
V_{COM}	VCOM output voltage	—	5.0	—	V
I_{VCOM}	VCOM output current allocated for external use	—	—	5.0	mA
$V_{COM(UV)}$	VCOM undervoltage fault threshold	—	4.4	—	V
V_{COM_HYS}	VCOM undervoltage hysteresis	—	100	—	mV
$t_{VCOM(FLT_TIMER)}$	VCOM undervoltage fault timer	—	10	—	µs
$t_{VCOM(RETRY)}$	VCOM fault retry timer	—	10	—	ms
$V_{COM(OV)}$	VCOM overvoltage fault threshold	5.4	—	5.9	V
$I_{LIM(OC)}$	VCOM current limit in TPL mode	65	—	140	mA
	VCOM current limit SPI mode	35	—	140	
$R_{VCOM(SS)}$	VCOM sleep mode pulldown resistor	—	2.0	—	kΩ
t_{VCOM}	VCOM rise time (CL = 2.2 µF ceramic X7R only)	—	—	400	µs
VANA power supply					
V_{ANA}	VANA output voltage (not used by external circuits) Decouple with 47 nF X7R 0603 or 0402	—	2.65	—	V
$V_{ANA(UV)}$	VANA undervoltage fault threshold	—	2.4	—	V
V_{ANA_HYS}	VANA undervoltage hysteresis	—	50	—	mV
$V_{ANA(FLT_TIMER)}$	VANA undervoltage fault timer	—	11	—	µs
$V_{ANA(OV)}$	VANA overvoltage fault threshold	—	2.8	—	V
$t_{VANA(RETRY)}$	VANA fault retry timer	—	10	—	ms
$I_{LIM(OC)}$	VANA current limit	5	—	10	mA
R_{VANA_RPD}	VANA sleep mode pull-down resistor	—	1.0	—	kΩ
t_{VANA}	VANA rise time (CL = 47 nF ceramic X7R only)	—	—	100	µs
ADC1-A, ADC1-B					
$CTn_{(LEAKAGE)}$	Cell terminal input leakage current	—	10	—	nA
CT_N	Cell terminal input current during conversion	—	50	—	nA
R_{PD}	Cell terminal open load detection pulldown resistor	—	950	—	Ω

All information provided in this document is subject to legal disclaimers.

© NXP B.V. 2020. All rights reserved.

Symbol	Parameter	Min	Typ	Max	Unit
V_{VPWR_RES}	VPWR terminal measurement resolution	—	2.44148	—	mV/LSB
V_{VPWR_RNG}	VPWR terminal measurement range SPI application TPL application	 5.0 7.0	 — —	 36 36	V
$VPWR_{TERM_ERR}$	VPWR terminal measurement accuracy	−0.5	—	0.5	%
V_{CT_RNG}	ADC differential input voltage range for CTn to CTn-1	0.0	—	4.85	V
$V_{CT_ANx_RES}$	Cell voltage and ANx resolution in 15-bit MEAS_xxxx registers	—	152.58789	—	µV/LSB
$V_{ERR33RT}$	Cell voltage measurement error V_{CELL} = 3.3 V, TA = 25 °C	 —	 ±0.4	 —	mV
V_{ERR}	Cell voltage measurement error 0.1 V ≤ V_{CELL} ≤ 4.85 V	—	 ±0.7	 —	mV
V_{ERR_1}	Cell voltage measurement error 0 V ≤ V_{CELL} ≤ 1.5 V, –40 °C ≤ T_A ≤ 60 °C (or –40 °C ≤ T_J ≤ 85 °C)	—	±0.4	—	mV
V_{ERR_2}	Cell voltage measurement error 1.5 V ≤ V_{CELL} ≤ 2.7 V, –40 °C ≤ T_A ≤ 60 °C (or –40 °C ≤ T_J ≤ 85 °C)	—	±0.4	—	mV
V_{ERR_3}	Cell voltage measurement error 2.7 V ≤ V_{CELL} ≤ 3.7 V, –40 °C ≤ T_A ≤ 60 °C (or –40 °C ≤ T_J ≤ 85 °C)	—	±0.5	—	mV
V_{ERR_4}	Cell voltage measurement error 3.7 V ≤ V_{CELL} ≤ 4.3 V, –40 °C ≤ T_A ≤ 60 °C (or –40 °C ≤ T_J ≤ 85 °C)	—	±0.7	—	mV
V_{ERR_5}	Cell voltage measurement error 1.5 V ≤ V_{CELL} ≤ 4.5 V	—	±0.7	—	mV
V_{ANx_ERR}	Magnitude of ANx error in the entire measurement range: Ratiometric measurement Absolute measurement, input in the range [1.0, 4.5] V Absolute measurement, input in the range [0, 4.85] V	 — — —	 — — —	 16 10 15	mV
t_{VCONV}	Single channel net conversion time 13-bit resolution 14-bit resolution 15-bit resolution 16-bit resolution	 — — — —	 6.77 9.43 14.75 25.36	 — — — —	µs
V_{V_NOISE}	Conversion noise 13-bit resolution 14-bit resolution 15-bit resolution 16-bit resolution	 — — — —	 1800 1000 600 400	 — — — —	µVrms
ADC2/current sense module					
V_{INC}	ISENSE+/ISENSE− input voltage (reference to AGND)	−300	—	300	mV
V_{IND}	ISENSE+/ISENSE− differential input voltage range	−150	—	150	mV
$V_{ISENSEX(OFFSET)}$	ISENSE+/ISENSE− input voltage offset error	—	—	0.5	µV
$I_{GAINERR}$	ISENSE error including nonlinearities	−0.5	—	0.5	%
I_{ISENSE_OL}	ISENSE open load injected current	—	130	—	µA

All information provided in this document is subject to legal disclaimers.

© NXP B.V. 2020. All rights reserved.

Symbol	Parameter	Min	Typ	Max	Unit
V_{ISENSE_OL}	ISENSE open load detection threshold	—	460	—	mV
V_{2RES}	Current sense user register resolution	—	0.6	—	µV/LSB
V_{PGA_SAT}	PGA saturation half-range				mV
	Gain = 256	—	4.9	—	
	Gain = 64	—	19.5	—	
	Gain = 16	—	78.1	—	
	Gain = 4	—	150	—	
V_{PGA_ITH}	Voltage threshold for PGA gain increase				mV
	Gain = 256	—	—	—	
	Gain = 64	—	2.344	—	
	Gain = 16	—	9.375	—	
	Gain = 4	—	37.50	—	
V_{PGA_DTH}	Voltage threshold for PGA gain decrease				mV
	Gain = 256	—	4.298	—	
	Gain = 64	—	17.188	—	
	Gain = 16	—	68.750	—	
	Gain = 4	—	—	—	
t_{AZC_SETTLE}	Time to perform auto-zero procedure after enabling the current channel	—	200	—	µs
t_{ICONV}	ADC conversion time including PGA settling time				µs
	13-bit resolution	—	19.00	—	
	14-bit resolution	—	21.67	—	
	15-bit resolution	—	27.00	—	
	16-bit resolution	—	37.67	—	
V_{I_NOISE}	Noise at 16-bit conversion	—	3.01	—	µVrms
V_{I_NOISE}	Noise error at 13-bit conversion	—	8.33	—	µVrms
ADC_{CLK}	ADC2 and ADC1-A,B clocking frequency	—	6.0	—	MHz
Cell balance drivers					
$V_{DS(CLAMP)}$	Cell balance driver VDS active clamp voltage	—	11	—	V
$V_{OUT(FLT_TH)}$	Output fault detection voltage threshold				V
	Balance off (open load)	—	0.55	—	
	Balance on (shorted load)				
R_{PD_CB}	Output OFF open load detection pull-down resistor				kΩ
	Balance off, open load detect disabled	—	2.0	—	
$I_{OUT(LKG)}$	Output leakage current				µA
	Balance off, open load detect disabled at V_{DS} = 4.0 V	—	—	1.0	
$I_{OUT(LKG_DIAG)}$	Output leakage current in diagnostic mode				µA
	CB_x pins, with balance OFF, open load detect disabled, VDS = 4.0 V	—	—	15	
	CB_X:X-1_C pins, with balance OFF, open load detect disabled, VDS = 4.0 V	—	—	49	
$R_{DS(on)}$	Drain-to-source on resistance				Ω
	I_{OUT} = 300 mA, T_J = 125 °C	—	—	0.80	
	I_{OUT} = 300 mA, T_J = 25 °C	—	0.5	—	
	I_{OUT} = 300 mA, T_J = −40 °C	—	0.4	—	
I_{LIM_CB}	Driver current limitation (shorted resistor)	310	—	950	mA
t_{ON}	Cell balance driver turn on				µs
	R_L = 15 Ω	—	350	—	

All information provided in this document is subject to legal disclaimers.

© NXP B.V. 2020. All rights reserved.

Symbol	Parameter	Min	Typ	Max	Unit
t_{OFF}	Cell balance driver turn off R_L = 15 Ω	—	200	—	µs
$t_{BAL_DEGLICTH}$	Short/open detect filter time	—	20	—	µs
Internal temperature measurement					
IC_TEMP1_ERR	IC temperature measurement error	−3.0	—	3.0	K
IC_TEMP1_RES	IC temperature resolution	—	0.032	—	K/LSB
TSD_TH	Thermal shutdown	—	170	—	°C
TSD_HYS	Thermal shutdown hysteresis	—	10	—	°C
Default operational parameters					
$V_{CTOV(TH)}$	Cell overvoltage threshold (8 bits)	0.0	4.2	5.0	V
$V_{CTOV(RES)}$	Cell overvoltage threshold resolution	—	19.53125	—	mV/LSB
$V_{CTUV(TH)}$	Cell undervoltage threshold (8 bits)	0.0	2.5	5.0	V
$V_{CTUV(RES)}$	Cell undervoltage threshold resolution	—	19.53125	—	mV/LSB
$V_{GPIO_OT(TH)}$	GPIOx configured as ANx input overtemperature threshold from POR	—	1.16	—	V
$V_{GPIO_OT(RES)}$	Overtemperature voltage threshold resolution	—	4.8828125	—	mV/LSB
$V_{GPIO_UT(TH)}$	GPIOx configured as ANx input undertemperature threshold from POR	—	3.82	—	V
$V_{GPIO_UT(RES)}$	Undertemperature voltage threshold resolution	—	4.8828125	—	mV/LSB
General purpose input/output GPIOx					
V_{IH}	Input high-voltage (3.3 V compatible)	2.0	—	—	V
V_{IL}	Input low-voltage (3.3 V compatible)	—	—	1.0	V
V_{HYS}	Input hysteresis	—	100	—	mV
I_{IL}	Input leakage current Pins tri-state, V_{IN} = V_{COM} or AGND	−100	—	100	nA
I_{IDL}	Differential input leakage current GPIO 5,6 GPIO 5,6 configured as digital inputs for current measurement	−30	—	30	nA
V_{OH}	Output high-voltage I_{OH} = −0.5 mA	V_{COM} − 0.8	—	—	V
V_{OL}	Output low-voltage I_{OL} = +0.5 mA	—	—	0.8	V
V_{ADC}	Analog ADC input voltage range for ratiometric measurements	AGND	—	V_{COM}	V
$V_{OL(TH)}$	Analog input open pin detect threshold	—	0.15	—	V
R_{OPENPD}	Internal open detection pull-down resistor	3.8	5.0	—	kΩ
t_{GPIO0_WU}	GPIO0 WU de-glitch filter	—	50	—	µs
t_{GPIO0_FLT}	GPIO0 daisy chain de-glitch filter both edges	—	20	—	µs
t_{GPIO2_SOC}	GPIO2 convert trigger de-glitch filter	—	2.0	—	µs
t_{GPIOx_DIN}	GPIOx configured as digital input de-glitch filter	2.5	—	5.6	µs
Reset input					
V_{IH_RST}	Input high-voltage (3.3 V compatible)	2.0	—	—	V
V_{IL_RST}	Input low-voltage (3.3 V compatible)	—	—	1.0	V
V_{HYS}	Input hysteresis	—	0.6	—	V
$t_{RESETFLT}$	RESET de-glitch filter	—	100	—	µs

All information provided in this document is subject to legal disclaimers.

© NXP B.V. 2020. All rights reserved.

Symbol	Parameter	Min	Typ	Max	Unit
R_{RESET_PD}	Input logic pull down (RESET)	—	100	—	kΩ
SPI_COM_EN input					
V_{IH}	Input high-voltage (3.3 V compatible)	2.0	—	—	V
V_{IL}	Input low-voltage (3.3 V compatible)	—	—	1.0	V
V_{HYS}	Input hysteresis	—	450	—	mV
Bus switch for TPL communication					
RX_{TERM}	Bus termination resistor (open resistor when bus switch is closed)	—	150	—	Ω
Remark: If the bus switch is closed, then the termination resistor is open, else the termination resistor is connected. At the end of the daisy chain, the switch must be open, so that the transmission line is properly terminated.					
Digital interface					
V_{FAULT_HA}	FAULT output (high active, IOH = 1.0 mA) FAULT output (High Active, IOH = 1.0 mA), SPI mode, 5.0 ≤ VPWR < 6.0 V	3.9 2.9	4.9 —	6.0 6.0	V
I_{FAULT_CL}	FAULT output current limit	3.0	—	25	mA
R_{FAULT_PD}	FAULT output pulldown resistance	—	100	—	kΩ
V_{IH_COMM}	Voltage threshold to detect the input as high SI/RDTX_IN+, SCLK/RDTX_IN–, CSB, SDA, SCL (NOTE: needs to be 3.3 V compatible)	—	—	2.0	V
V_{IL_COMM}	Voltage threshold to detect the input as low SI/RDTX_IN+, SCLK/RDTX_IN–, CSB, SDA, SCL	0.8	—	—	V
V_{HYS}	Input hysteresis SI/RDTX_IN+, SCLK/RDTX_IN−, CSB, SDA, SCL	—	100	—	mV
I_{LOGIC_SS}	Sleep state input logic current CSB	−100	—	100	nA
R_{SCLK_PD}	Input logic pulldown resistance (SCLK/RDTX_IN–, SI/RDTX+)	—	20	—	kΩ
R_{I_PU}	Input logic pullup resistance to V_{COM} (CSB, SDA, SCL)	—	100	—	kΩ
I_{SO_TRI}	Tri-state SO input current 0 V to V_{COM}	−2.0	—	2.0	µA
V_{SO_HIGH}	SO high-state output voltage with $I_{SO(HIGH)}$ = −2.0 mA	V_{DDIO} − 0.4	—	—	V
V_{SO_LOW}	SO, SDA, SLK low-state output voltage with $I_{SO(HIGH)}$ = −2.0 mA	—	—	0.4	V
CSB_{WU_FLT}	CSB wake-up de-glitch filter, low to high transition	—	50	—	µs
System timing					
t_{CELL_CONV}	Time needed to acquire all 6 cell voltages and the current after an on demand conversion 13-bit resolution 14-bit resolution 15-bit resolution 16-bit resolution	 — — — —	 41 57 89 152	 — — — —	µs
t_{SYNC}	V/I synchronization time ADC1-A,B at 13 bit, ADC2 at 13 bit ADC1-A,B at 14 bit, ADC2 at 13 bit ADC1-A,B at 15 bit, ADC2 at 13 bit ADC1-A,B at 16 bit, ADC2 at 13 bit	 — — — —	 41.39 42.71 47.37 95.14	 — — — —	µs

All information provided in this document is subject to legal disclaimers.

© NXP B.V. 2020. All rights reserved.

Symbol	Parameter	Min	Typ	Max	Unit
t_{SYNC}	V/I synchronization time				µs
	ADC1-A,B at 13 bit, ADC2 at 14 bit	—	46.73	—	
	ADC1-A,B at 14 bit, ADC2 at 14 bit	—	48.05	—	
	ADC1-A,B at 15 bit, ADC2 at 14 bit	—	50.71	—	
	ADC1-A,B at 16 bit, ADC2 at 14 bit	—	92.47	—	
t_{SYNC}	V/I synchronization time				µs
	ADC1-A,B at 13 bit, ADC2 at 15 bit	—	57.39	—	
	ADC1-A,B at 14 bit, ADC2 at 15 bit	—	58.71	—	
	ADC1-A,B at 15 bit, ADC2 at 15 bit	—	61.37	—	
	ADC1-A,B at 16 bit, ADC2 at 15 bit	—	87.14	—	
t_{SYNC}	V/I synchronization time				µs
	ADC1-A,B at 13 bit, ADC2 at 16 bit	—	78.73	—	
	ADC1-A,B at 14 bit, ADC2 at 16 bit	—	80.05	—	
	ADC1-A,B at 15 bit, ADC2 at 16 bit	—	82.71	—	
	ADC1-A,B at 16 bit, ADC2 at 16 bit	—	88.02	—	
$t_{VPWR(READY)}$	Time after VPWR connection for the IC to be ready for initialization	—	—	5.0	ms
$t_{WAKE-UP}$	Sleep mode to normal mode device ready				µs
	Wake-up from fault	—	—	400	
	Wake-up from GPIO	—	—	400	
	Wake-up from network	—	—	400	
	Wake-up from CSB	—	—	400	
	Sleep mode to normal mode time after TPL bus wake-up	—	—	1.0	ms
t_{WAKE_DELAY}	Time between wake pulses	—	600	—	µs
t_{IDLE}	Idle timeout after POR	—	60	—	s
t_{WAKE_INIT}	Wake-up signaling timeout after POR	—	0.65	—	s
$t_{BALANCE}$	Cell balance timer range	0.5	—	511	min
t_{CYCLE}	Cyclic acquisition timer range	0.0	—	8.5	s
t_{FAULT}	Fault detection to activation of fault pin				µs
	Normal mode	—	—	56	
t_{EOC}	SOC to data ready (includes post processing of data)				µs
	13-bit resolution	—	148	—	
	14-bit resolution	—	201	—	
	15-bit resolution	—	307	—	
	16-bit resolution	—	520	—	
t_{SETTLE}	Time after SOC to begin converting with ADC1-A,B	—	12.28	—	µs
t_{CLST_TPL}	Time needed to send an SOC command and read back 6 cell voltages, 7 temperatures, 1 current, and 1 coulomb counter with TPL communication working at 2.0 Mbps and ADC1-A,B configured as follows:				ms
	13-bit resolution	—	0.79	—	
	14-bit resolution	—	0.85	—	
	15-bit resolution	—	0.95	—	
	16-bit resolution	—	1.16	—	

All information provided in this document is subject to legal disclaimers.

© NXP B.V. 2020. All rights reserved.

Symbol	Parameter		Min	Typ	Max	Unit
t_{CLST_SPI}	Time needed to send an SOC command and read back 6 cell voltages, 7 temperatures, 1 current, and 1 coulomb counter with SPI communication working at 4.0 Mbps and ADC1-A,B configured as follows: 13-bit resolution 14-bit resolution 15-bit resolution 16-bit resolution		 — — — —	 0.48 0.54 0.64 0.86	 — — — —	ms
$t_{I2C_DOWNLOAD}$	Time to download EEPROM calibration after POR		—	—	1.0	ms
t_{I2C_ACCESS}	EEPROM access time, EEPROM write (depends on device selection)		—	5.0	—	ms
$t_{WAVE_DC_BITx}$	Daisy chain duty cycle off time $t_{WAVE_DC_BITx = 00}$		—	500	—	µs
$t_{WAVE_DC_BITx}$	Daisy chain duty cycle off time $t_{WAVE_DC_BITx = 01}$		—	1.0	—	ms
$t_{WAVE_DC_BITx}$	Daisy chain duty cycle off time $t_{WAVE_DC_BITx = 10}$		—	10	—	ms
$t_{WAVE_DC_BITx}$	Daisy chain duty cycle off time $t_{WAVE_DC_BITx = 11}$		—	100	—	ms
$t_{WAVE_DC_ON}$	Daisy chain duty cycle on time		—	500	550	µs
t_{COM_LOSS}	Time out to reset the IC in the absence of communication		—	1024	—	ms
SPI interface						
F_{SCK}	CLK/RDTX_IN– frequency		—	—	4.0	MHz
t_{SCK_H}	SCLK/RDTX_IN– high time (A)	[1]	125	—	—	ns
t_{SCK_L}	SCLK/RDTX_IN– high time (B)	[1]	125	—	—	ns
t_{SCK}	SCLK/RDTX_IN− period (A+B)	[1]	250	—	—	ns
t_{FALL}	SCLK/RDTX_IN− falling time		—	—	15	ns
t_{RISE}	SCLK/RDTX_IN− rising time		—	—	15	ns
t_{SET}	SCLK/RDTX_IN− setup time (O)	[1]	20	—	—	ns
t_{HOLD}	SCLK/RDTX_IN– hold time (P)	[1]	20	—	—	ns
t_{SI_SETUP}	SI/RDTX_IN+ setup time (F)	[1]	40	—	—	ns
t_{SI_HOLD}	SI/RDTX_IN+ hold time (G)	[1]	40	—	—	ns
t_{SO_VALID}	SO data valid, rising edge of SCLK/ RDTX_IN− to SO data valid (I)	[1]	—	—	40	ns
t_{SO_EN}	SO enable time (H)	[1]	—	—	40	ns
$t_{SO_DISABLE}$	SO disable time (K)	[1]	—	—	40	ns
t_{CSB_LEAD}	CSB lead time (L)	[1]	100	—	—	ns
t_{CSB_LAG}	CSB lag time (M)	[1]	100	—	—	ns
t_{TD}	Sequential data transfer delay (N)	[1]	1.0	—	—	µs
TPL interface [2]						

[1] See Figure 4

[2] Detailed application information about how to build a TPL daisy chain can be found in the AN12605 application note dedicated to communication.

All information provided in this document is subject to legal disclaimers.

© NXP B.V. 2020. All rights reserved.

7.5 Timing diagrams

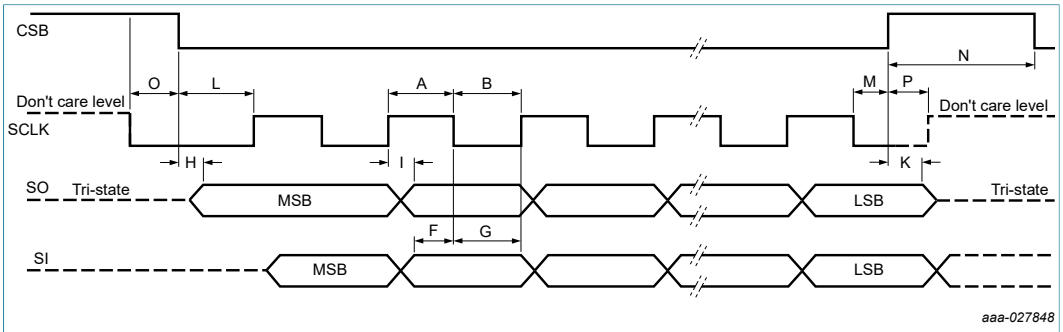

Figure 4. Low-voltage SPI interface timing

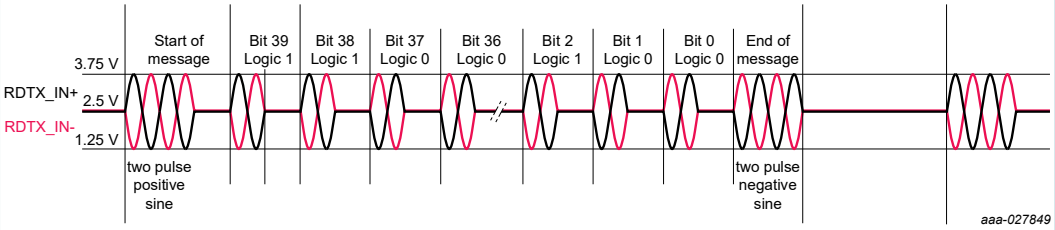

Figure 5. Transformer communication signaling

8 Packaging

8.1 Package mechanical dimensions

Package dimensions are provided in package drawings. To find the most current package outline drawing, go to www.nxp.com and perform a keyword search for the drawing's document number.

Table 8. Package Outline

Package	Suffix	Package outline drawing number
48-pin LQFP-EP	AE	SOT1571-1

All information provided in this document is subject to legal disclaimers.

© NXP B.V. 2020. All rights reserved.

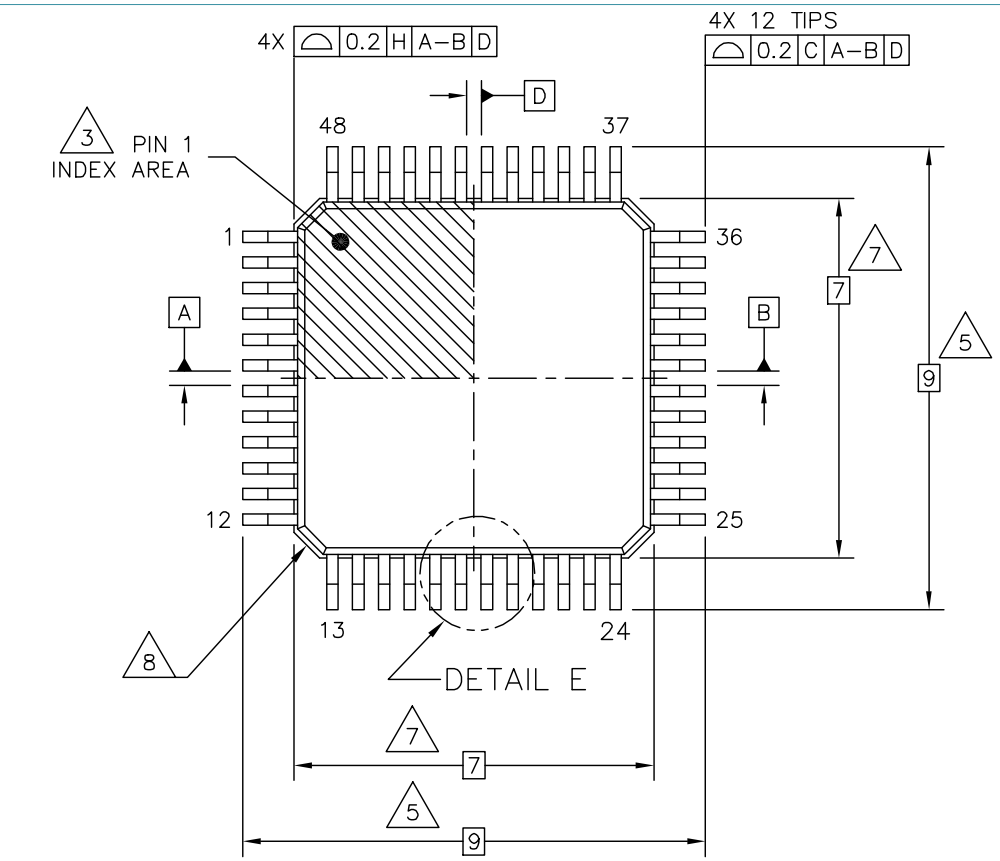

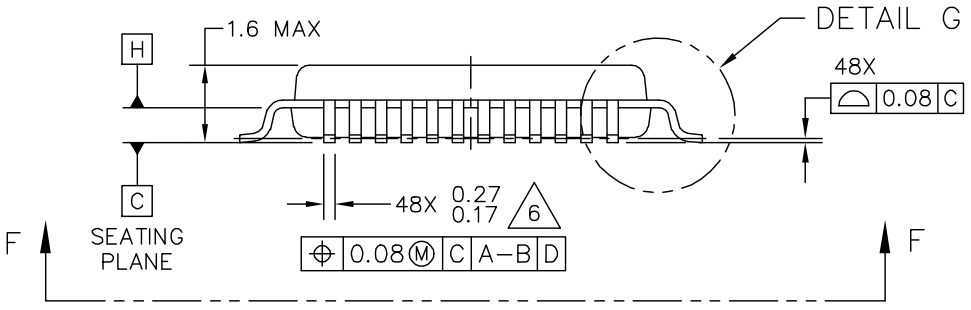

© NXP SEMICONDUCTORS N.V. ALL RIGHTS RESERVED

DATE: 14 DEC 2017

MECHANICAL OUTLINE PRINT VERSION NOT TO SCALE	STANDARD: JEDEC MS–026 BBC	DRAWING NUMBER: SOT1571–1	REVISION: F	

All information provided in this document is subject to legal disclaimers.

© NXP B.V. 2020. All rights reserved.

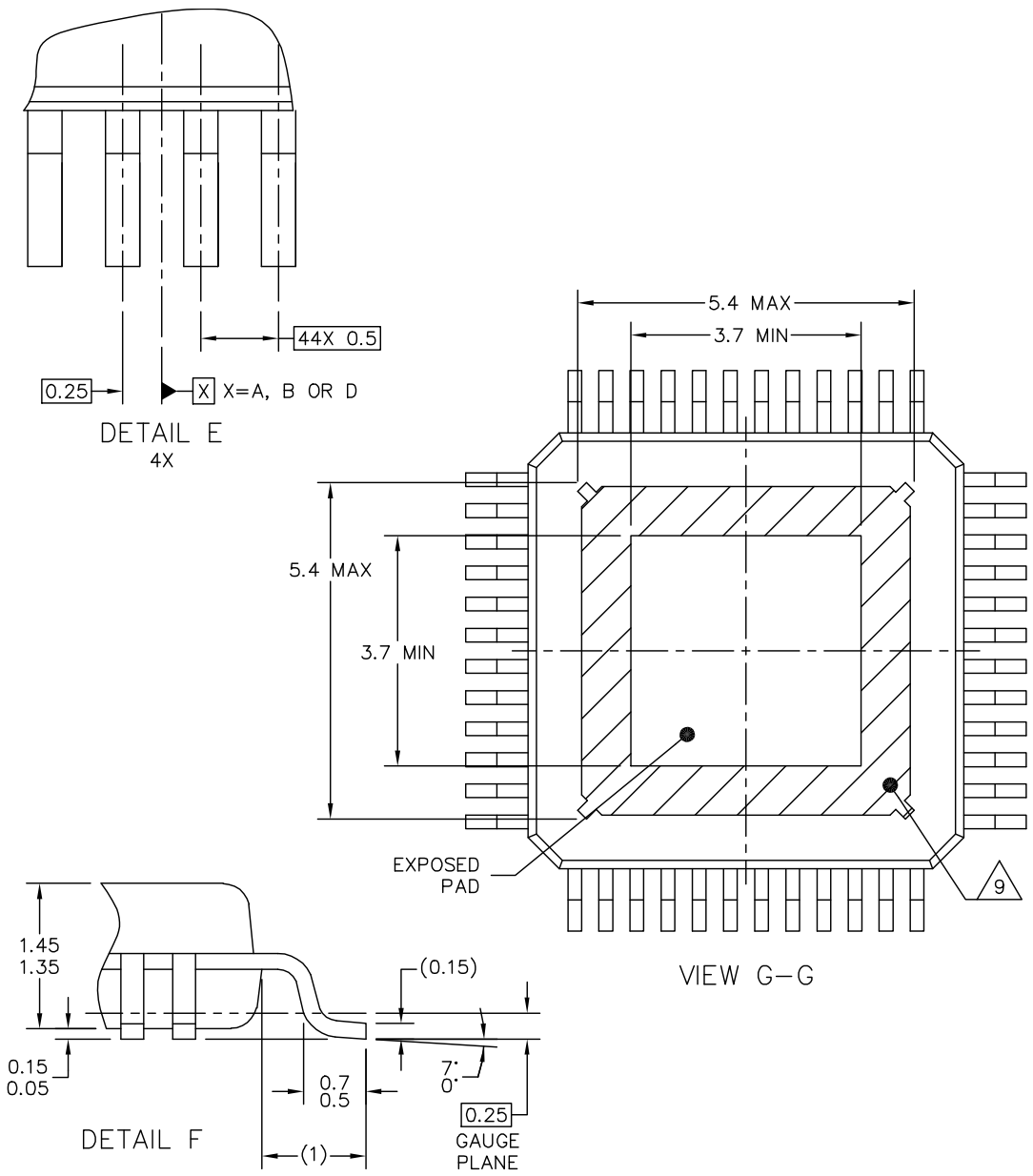

© NXP SEMICONDUCTORS N.V. ALL RIGHTS RESERVED DATE: 14 DEC 2017

MECHANICAL OUTLINE PRINT VERSION NOT TO SCALE	STANDARD: JEDEC MS–026 BBC	DRAWING NUMBER: SOT1571–1	REVISION: F	

All information provided in this document is subject to legal disclaimers.

© NXP B.V. 2020. All rights reserved.

NOTES:

1. DIMENSIONS ARE IN MILLIMETERS.
2. DIMENSIONING AND TOLERANCING PER ASME Y14.5M–1994.
3. PIN 1 FEATURE SHAPE, SIZE AND LOCATION MAY VARY.
4. DATUMS A, B AND D TO BE DETERMINED AT DATUM PLANE H.
5. DIMENSION TO BE DETERMINED AT SEATING PLANE C.
6. THIS DIMENSION DOES NOT INCLUDE DAMBAR PROTRUSION. ALLOWABLE DAMBAR PROTRUSION SHALL NOT CAUSE THE LEAD WIDTH TO EXCEED THE UPPER LIMIT BY MORE THAN 0.08MM AT MAXIMUM MATERIAL CONDITION. DAMBAR CANNOT BE LOCATED ON THE LOWER RADIUS OR THE FOOT. MINIMUM SPACE BETWEEN PROTRUSION AND ADJACENT LEAD SHALL NOT BE LESS THAN 0.07MM.
7. THIS DIMENSION DOES NOT INCLUDE MOLD PROTRUSION. ALLOWABLE PROTRUSION IS 0.25MM PER SIDE. THIS DIMENSION IS MAXIMUM PLASTIC BODY SIZE DIMENSION INCLUDING MOLD MISMATCH.
8. EXACT SHAPE OF EACH CORNER IS OPTIONAL.
9. HATCHED AREA TO BE KEEP OUT ZONE FOR PCB ROUTING.

© NXP SEMICONDUCTORS N.V. ALL RIGHTS RESERVED DATE: 14 DEC 2017

MECHANICAL OUTLINE PRINT VERSION NOT TO SCALE	STANDARD: JEDEC MS–026 BBC	DRAWING NUMBER: SOT1571–1	REVISION: F	

Figure 6. Package outline

All information provided in this document is subject to legal disclaimers.

© NXP B.V. 2020. All rights reserved.

9 Revision history

Table 9. Revision history

Document ID	Release date	Data sheet status	Change notice	Supersedes
MC33772B_SDS v.6.0	20200402	Technical data	202003032I	MC33772B_SDS v.5.0
Modifications	• Revision updated to match full data sheet			
MC33772B_SDS v.5.0	20181108	Technical data	201806036I	MC33772B_SDS v.4.0
MC33772B_SDS v.4.0	20180731	Technical data	—	MC33772B_SDS v.3.0
MC33772B_SDS v.3.0	20180608	Technical data	—	—

All information provided in this document is subject to legal disclaimers.

© NXP B.V. 2020. All rights reserved.

10 Legal information

10.1 Data sheet status

Document status[1][2]	Product status[3]	Definition
[short] Data sheet: product preview	Development	This document contains certain information on a product under development. NXP reserves the right to change or discontinue this product without notice.
[short] Data sheet: advance information	Qualification	This document contains information on a new product. Specifications and information herein are subject to change without notice.
[short] Data sheet: technical data	Production	This document contains the product specification. NXP Semiconductors reserves the right to change the detail specifications as may be required to permit improvements in the design of its products.

[1] Please consult the most recently issued document before initiating or completing a design.
[2] The term 'short data sheet' is explained in section "Definitions".
[3] The product status of device(s) described in this document may have changed since this document was published and may differ in case of multiple devices. The latest product status information is available on the Internet at URL http://www.nxp.com.

10.2 Definitions

Draft — The document is a draft version only. The content is still under internal review and subject to formal approval, which may result in modifications or additions. NXP Semiconductors does not give any representations or warranties as to the accuracy or completeness of information included herein and shall have no liability for the consequences of use of such information.

Short data sheet — A short data sheet is an extract from a full data sheet with the same product type number(s) and title. A short data sheet is intended for quick reference only and should not be relied upon to contain detailed and full information. For detailed and full information see the relevant full data sheet, which is available on request via the local NXP Semiconductors sales office. In case of any inconsistency or conflict with the short data sheet, the full data sheet shall prevail.

Product specification — The information and data provided in a technical data data sheet shall define the specification of the product as agreed between NXP Semiconductors and its customer, unless NXP Semiconductors and customer have explicitly agreed otherwise in writing. In no event however, shall an agreement be valid in which the NXP Semiconductors product is deemed to offer functions and qualities beyond those described in the technical data data sheet.

10.3 Disclaimers

Limited warranty and liability — Information in this document is believed to be accurate and reliable. However, NXP Semiconductors does not give any representations or warranties, expressed or implied, as to the accuracy or completeness of such information and shall have no liability for the consequences of use of such information. NXP Semiconductors takes no responsibility for the content in this document if provided by an information source outside of NXP Semiconductors. In no event shall NXP Semiconductors be liable for any indirect, incidental, punitive, special or consequential damages (including - without limitation - lost profits, lost savings, business interruption, costs related to the removal or replacement of any products or rework charges) whether or not such damages are based on tort (including negligence), warranty, breach of contract or any other legal theory. Notwithstanding any damages that customer might incur for any reason whatsoever, NXP Semiconductors' aggregate and cumulative liability towards customer for the products described herein shall be limited in accordance with the Terms and conditions of commercial sale of NXP Semiconductors.

Right to make changes — NXP Semiconductors reserves the right to make changes to information published in this document, including without limitation specifications and product descriptions, at any time and without notice. This document supersedes and replaces all information supplied prior to the publication hereof.

Applications — Applications that are described herein for any of these products are for illustrative purposes only. NXP Semiconductors makes no representation or warranty that such applications will be suitable for the specified use without further testing or modification. Customers are responsible for the design and operation of their applications and products using NXP Semiconductors products, and NXP Semiconductors accepts no liability for any assistance with applications or customer product design. It is customer's sole responsibility to determine whether the NXP Semiconductors product is suitable and fit for the customer's applications and products planned, as well as for the planned application and use of customer's third party customer(s). Customers should provide appropriate design and operating safeguards to minimize the risks associated with their applications and products. NXP Semiconductors does not accept any liability related to any default, damage, costs or problem which is based on any weakness or default in the customer's applications or products, or the application or use by customer's third party customer(s). Customer is responsible for doing all necessary testing for the customer's applications and products using NXP Semiconductors products in order to avoid a default of the applications and the products or of the application or use by customer's third party customer(s). NXP does not accept any liability in this respect.

Limiting values — Stress above one or more limiting values (as defined in the Absolute Maximum Ratings System of IEC 60134) will cause permanent damage to the device. Limiting values are stress ratings only and (proper) operation of the device at these or any other conditions above those given in the Recommended operating conditions section (if present) or the Characteristics sections of this document is not warranted. Constant or repeated exposure to limiting values will permanently and irreversibly affect the quality and reliability of the device.

Terms and conditions of commercial sale — NXP Semiconductors products are sold subject to the general terms and conditions of commercial sale, as published at http://www.nxp.com/profile/terms, unless otherwise agreed in a valid written individual agreement. In case an individual agreement is concluded only the terms and conditions of the respective agreement shall apply. NXP Semiconductors hereby expressly objects to applying the customer's general terms and conditions with regard to the purchase of NXP Semiconductors products by customer.

Suitability for use in automotive applications — This NXP Semiconductors product has been qualified for use in automotive applications. Unless otherwise agreed in writing, the product is not designed, authorized or warranted to be suitable for use in life support, life-critical or safety-critical systems or equipment, nor in applications where failure or

All information provided in this document is subject to legal disclaimers.

© NXP B.V. 2020. All rights reserved.

malfunction of an NXP Semiconductors product can reasonably be expected to result in personal injury, death or severe property or environmental damage. NXP Semiconductors and its suppliers accept no liability for inclusion and/or use of NXP Semiconductors products in such equipment or applications and therefore such inclusion and/or use is at the customer's own risk.

Export control — This document as well as the item(s) described herein may be subject to export control regulations. Export might require a prior authorization from competent authorities.

Translations — A non-English (translated) version of a document is for reference only. The English version shall prevail in case of any discrepancy between the translated and English versions.

10.4 Trademarks

Notice: All referenced brands, product names, service names and trademarks are the property of their respective owners.

SMARTMOS — is a trademark of NXP B.V.

All information provided in this document is subject to legal disclaimers.

© NXP B.V. 2020. All rights reserved.

Tables

Tab. 1. Part number breakdown 4
Tab. 2. Orderable part variations 5
Tab. 3. Pin definitions 6
Tab. 4. Ratings vs. operating requirements 8
Tab. 5. Maximum ratings 8
Tab. 6. Thermal ratings 9
Tab. 7. Static and dynamic electrical characteristics ... 11
Tab. 8. Package Outline 19
Tab. 9. Revision history 23

Figures

Fig. 1. Simplified application diagram, SPI use case 2
Fig. 2. Simplified application diagram, TPL use case 3
Fig. 3. Pinout diagram 6
Fig. 4. Low-voltage SPI interface timing 19
Fig. 5. Transformer communication signaling 19
Fig. 6. Package outline 20

All information provided in this document is subject to legal disclaimers.

© NXP B.V. 2020. All rights reserved.

Contents

1 General description 1
2 Features 1
3 Simplified application diagram 2
4 Applications 4
5 Ordering information 4
5.1 Part numbers definition 4
5.2 Part numbers list 5
6 Pinning information 6
6.1 Pinout diagram 6
6.2 Pin definitions 6
7 General product characteristics 8
7.1 Ratings and operating requirements relationship 8
7.2 Maximum ratings 8
7.3 Thermal characteristics 9
7.4 Electrical characteristics 11
7.5 Timing diagrams 19
8 Packaging 19
8.1 Package mechanical dimensions 19
9 Revision history 23
10 Legal information 24

Please be aware that important notices concerning this document and the product(s) described herein, have been included in section 'Legal information'.

© NXP B.V. 2020. **All rights reserved.**

For more information, please visit: http://www.nxp.com
For sales office addresses, please send an email to: salesaddresses@nxp.com

Date of release: 2 April 2020
Document identifier: MC33772B_SDS

ENTEGRECİ

Bu belge www.entegreci.com üzerinden sunulmaktadır.

Elektronik komponent tedarikinde Entegreci

Entegreci, Eskişehir merkezli, Türkiye geneline satış yapan bir elektronik komponent mağazasıdır. Entegreler (IC), mikrodenetleyiciler, transistörler, diyotlar, pasif elemanlar, konnektörler, modüller ve geliştirme kartları tek adetten seri üretim adetlerine kadar satılır. Ürün sayfalarında güncel stok durumunu, fiyatı ve datasheet bağlantısını bulabilirsiniz.

Parça koduyla arama

Üretici parça numarasını yazın; stok ve fiyatı hemen görün.

www.entegreci.com

Ürün kategorileri

Entegreden kapasitöre tüm elektronik komponent kategorileri.

Kategorilere göz atın

Üreticiler

Aradığınız üreticinin ürünlerini tek sayfada inceleyin.

Üreticileri görün

Toplu alım ve teklif

Listede olmayan ya da yüksek adetli parçalar için teklif isteyin.

Teklif isteyin

www.entegreci.com | **destek@entegreci.com** | **0850 305 90 34**

Entegreci is an online electronic components store based in Türkiye. Search by manufacturer part number to see stock, prices and datasheets for integrated circuits, microcontrollers, transistors, passive components and connectors, or request a quote for parts that are not listed.

Bu sayfa Entegreci tarafından eklenmiştir. Belgenin önceki sayfaları asıl yayıncısına aittir ve içeriği değiştirilmemiştir; en güncel sürüm için belgenin yayıncısına başvurun.