KF4N60F

N CHANNEL MOS FIELD EFFECT TRANSISTOR

General Description

This planar stripe MOSFET has better characteristics, such as fast switching time, low on resistance, low gate charge and excellent avalanche characteristics. It is mainly suitable for electronic ballast and switching mode power supplies.

FEATURES

· V_{DSS}= 600V, I_D= 4A

· Drain-Source ON Resistance : $R_{DS(ON)}$=2.5Ω @V_{GS} = 10V

· Qg(typ) = 10nC

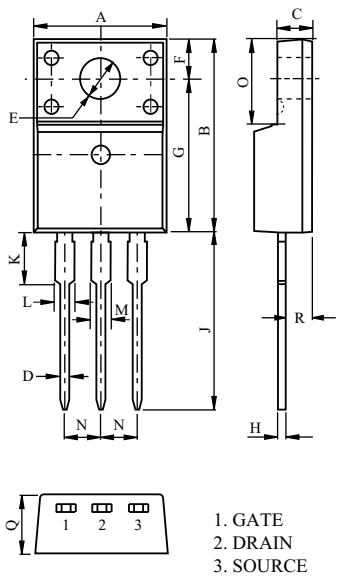

DIM	MILLIMETERS
A	10.16 ± 0.2
B	15.87 ± 0.2
C	2.54 ± 0.2
D	0.8 ± 0.1
E	ø3.18 ± 0.1
F	3.3 ± 0.1
G	12.57 ± 0.2
H	0.5 ± 0.1
J	13.0 ± 0.5
K	3.23 ± 0.1
L	1.47 MAX
M	1.47 MAX
N	2.54 ± 0.2
O	6.68 ± 0.2
Q	4.7 ± 0.2
R	2.76 ± 0.2

* Single Gauge Lead Frame

TO-220IS (1)

MAXIMUM RATING (Ta=25℃)

CHARACTERISTIC		SYMBOL	RATING	UNIT
Drain-Source Voltage		V_{DSS}	600	V
Gate-Source Voltage		V_{GSS}	±30	V
Drain Current	@T_C=25℃	I_D	4*	A
	@T_C=100℃		2.4*	
	Pulsed (Note1)	I_{DP}	12*	
Single Pulsed Avalanche Energy (Note 2)		E_{AS}	130	mJ
Repetitive Avalanche Energy (Note 1)		E_{AR}	3.3	mJ
Peak Diode Recovery dv/dt (Note 3)		dv/dt	4.5	V/ns
Drain Power Dissipation	Tc=25℃	P_D	37.9	W
	Derate above 25℃		0.3	W/℃
Maximum Junction Temperature		T_j	150	℃
Storage Temperature Range		T_{stg}	-55 150	℃
Thermal Characteristics				
Thermal Resistance, Junction-to-Case		R_{thJC}	3.3	℃/W
Thermal Resistance, Junction-to-Ambient		R_{thJA}	62.5	℃/W

* : Drain current limited by maximum junction temperature.

PIN CONNECTION

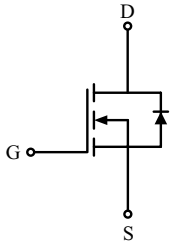

ELECTRICAL CHARACTERISTICS (Ta=25℃)

CHARACTERISTIC	SYMBOL	TEST CONDITION	MIN.	TYP.	MAX.	UNIT
Static						
Drain-Source Breakdown Voltage	BV_{DSS}	I_D=250μA, V_{GS}=0V	600	-	-	V
Breakdown Voltage Temperature Coefficient	$\Delta BV_{DSS}/\Delta T_j$	I_D=250μA, Referenced to 25℃	-	0.61	-	V/℃
Drain Cut-off Current	I_{DSS}	V_{DS}=600V, V_{GS}=0V,	-	-	10	μA
Gate Threshold Voltage	V_{th}	V_{DS}=V_{GS}, I_D=250μA	2.5	-	4.5	V
Gate Leakage Current	I_{GSS}	V_{GS}=±30V, V_{DS}=0V	-	-	±100	nA
Drain-Source ON Resistance	$R_{DS(ON)}$	V_{GS}=10V, I_D=2A	-	1.9	2.5	Ω
Dynamic						
Total Gate Charge	Q_g	V_{DS}=480V, I_D=4A V_{GS}=10V (Note4,5)	-	10	-	nC
Gate-Source Charge	Q_{gs}		-	2.3	-	
Gate-Drain Charge	Q_{gd}		-	4.1	-	
Turn-on Delay time	$t_{d(on)}$	V_{DD}=300V I_D=4A R_G=25Ω (Note4,5)	-	30	-	ns
Turn-on Rise time	t_r		-	30	-	
Turn-off Delay time	$t_{d(off)}$		-	70	-	
Turn-off Fall time	t_f		-	30	-	
Input Capacitance	C_{iss}	V_{DS}=25V, V_{GS}=0V, f=1.0MHz	-	480	-	pF
Output Capacitance	C_{oss}		-	54	-	
Reverse Transfer Capacitance	C_{rss}		-	6.0	-	
Source-Drain Diode Ratings						
Continuous Source Current	I_S	V_{GS}<V_{th}	-	-	4	A
Pulsed Source Current	I_{SP}		-	-	16	
Diode Forward Voltage	V_{SD}	I_S=4A, V_{GS}=0V	-	-	1.4	V
Reverse Recovery Time	t_{rr}	I_S=4A, V_{GS}=0V, dIs/dt=100A/μs	-	300	-	ns
Reverse Recovery Charge	Q_{rr}		-	1.7	-	μC

Note 1) Repetivity rating : Pulse width limited by junction temperature.

Note 2) L=15mH, I_S=4A, V_{DD}=50V, R_G=25Ω, Starting T_j=25℃.

Note 3) I_S≤4A, dI/dt≤100A/μs, V_{DD}≤BV_{DSS}, Starting T_j=25℃.

Note 4) Pulse Test : Pulse width ≤300μs, Duty Cycle≤2%.

Note 5) Essentially independent of operating temperature.

Marking

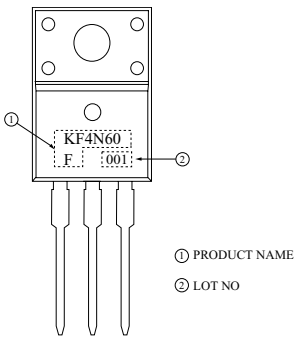

Fig1. I_D - V_{DS}

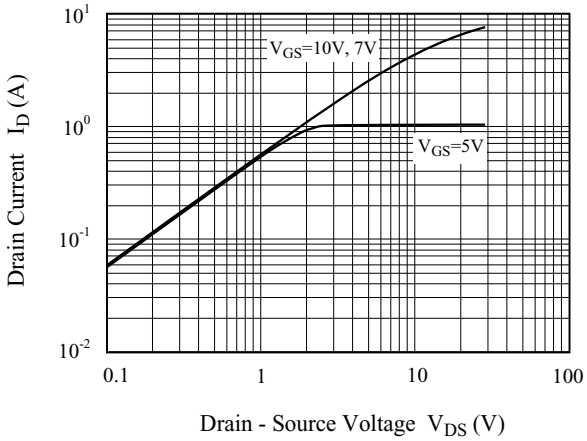

Fig2. I_D - V_{GS}

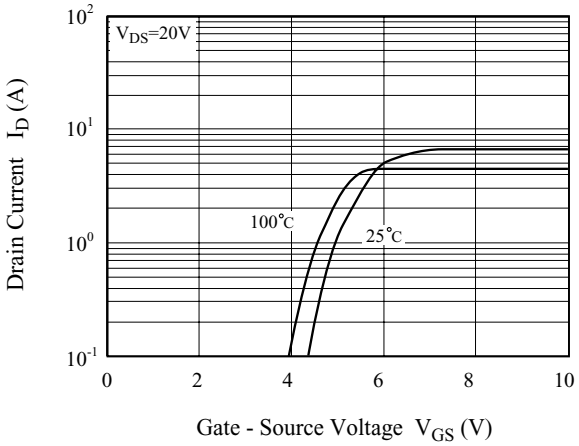

Fig3. BV_{DSS} - T_j

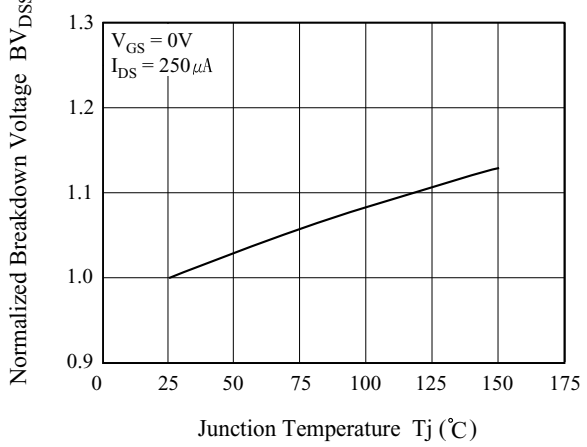

Fig4. $R_{DS(ON)}$ - I_D

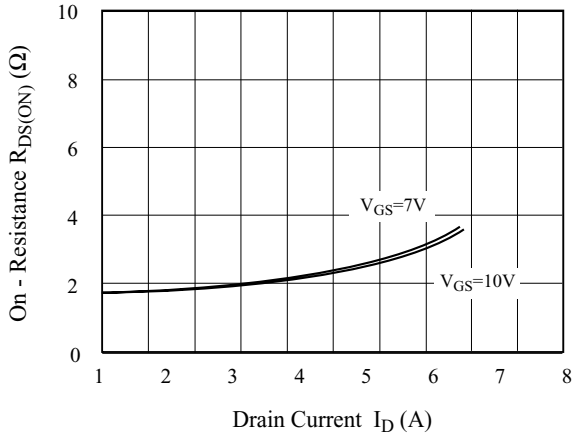

Fig5. I_S - V_{SD}

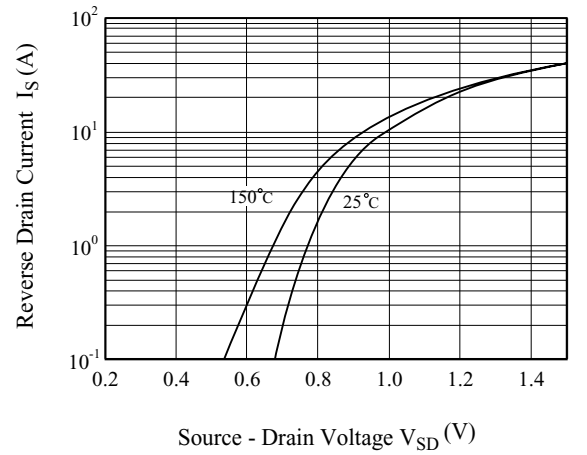

Fig6. $R_{DS(ON)}$ - T_j

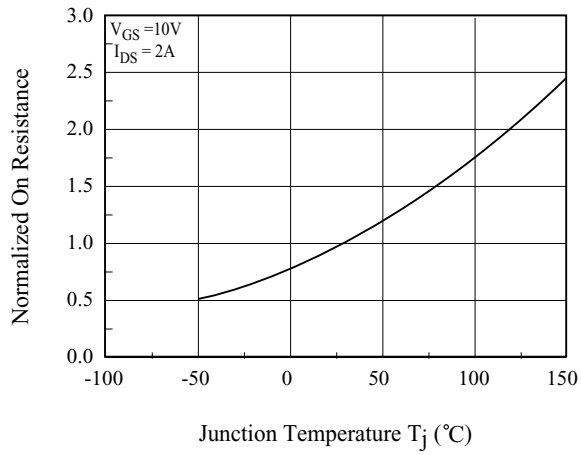

Fig 7. C - V_{DS}

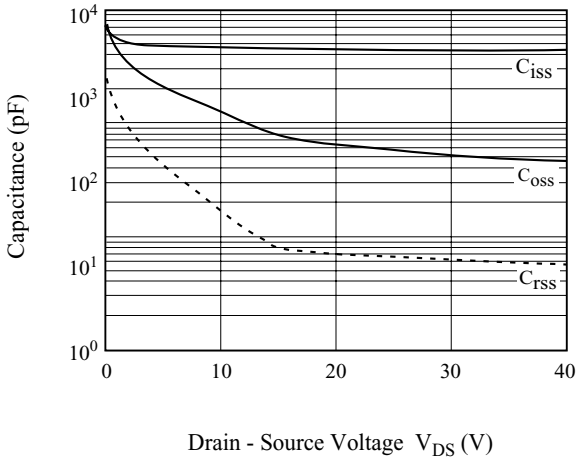

Fig 8. Q_g- V_{GS}

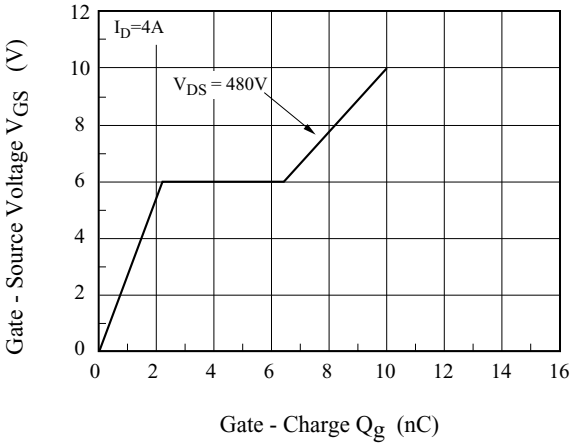

Fig 9. Safe Operation Area

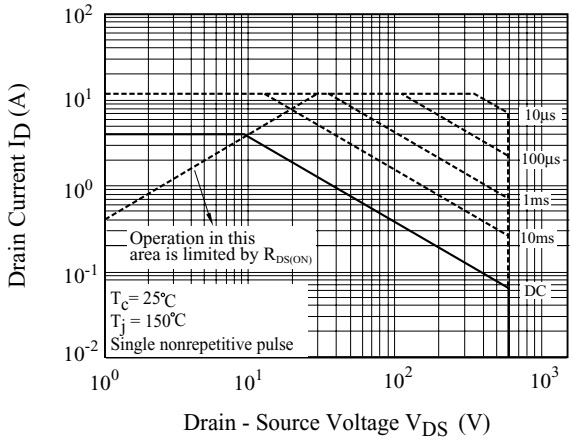

Fig10. Transient Thermal Response Curve

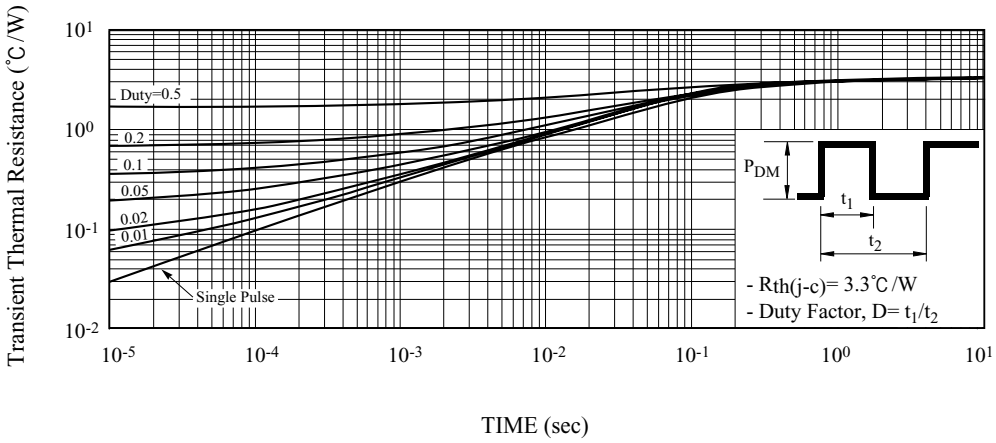

Fig11. Gate Charge

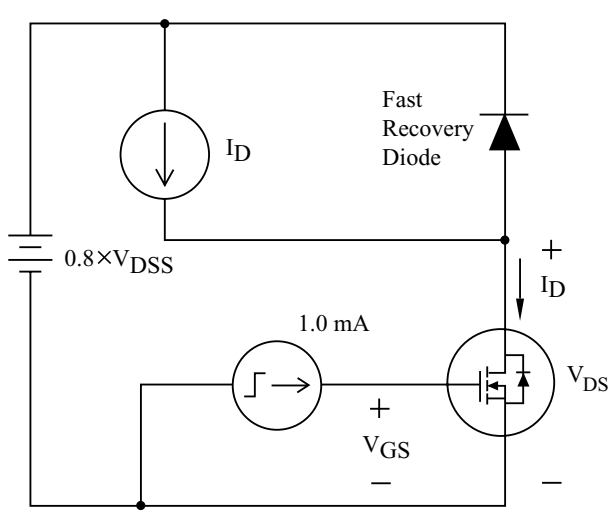

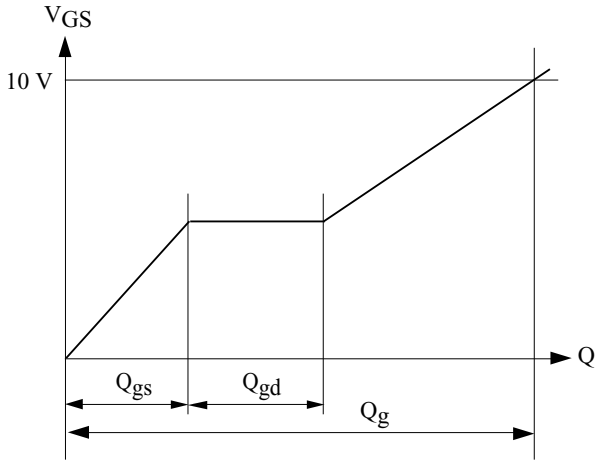

Fig12. Single Pulsed Avalanche Energy

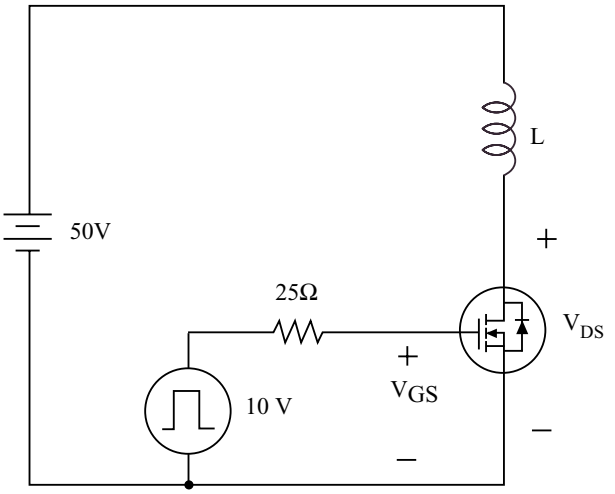

$$E_{AS}= \frac{1}{2} LI_{AS}^2 \frac{BV_{DSS}}{BV_{DSS} - V_{DD}}$$

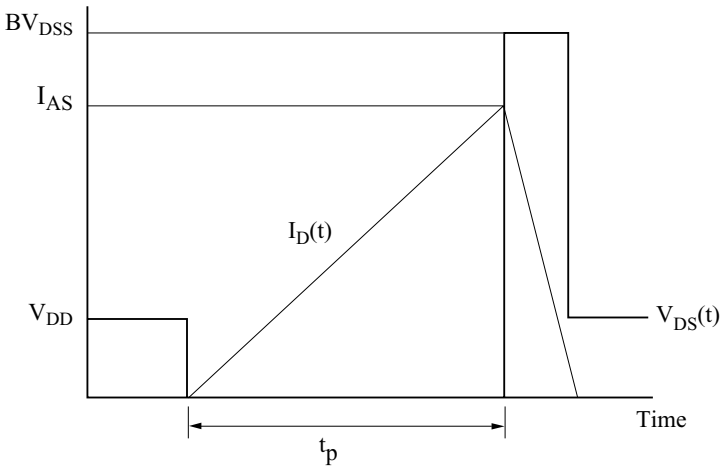

Fig13. Resistive Load Switching

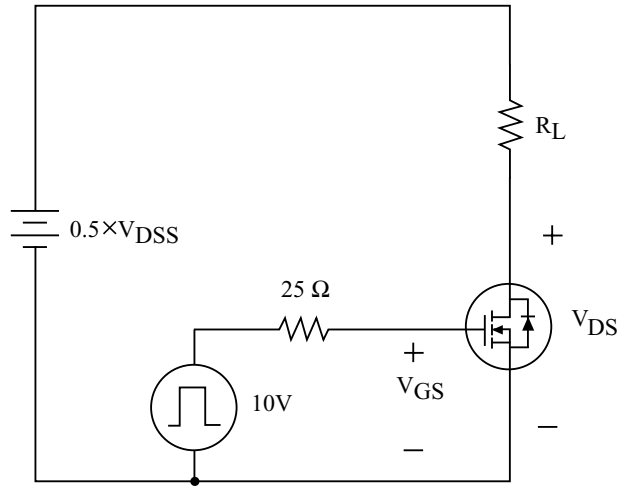

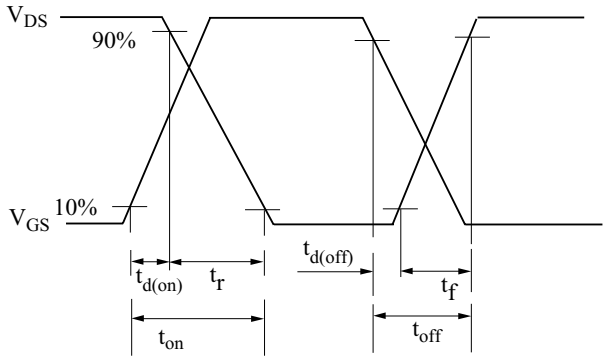

Fig14. Source - Drain Diode Reverse Recovery and dv /dt

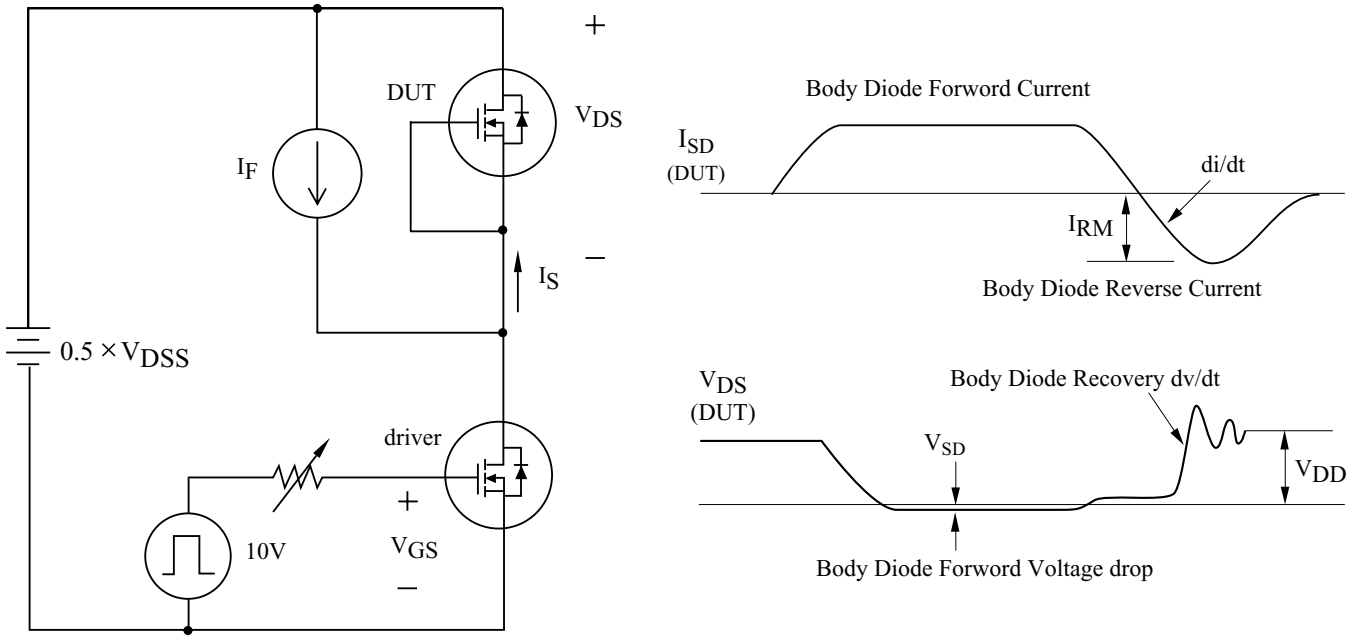

ENTEGRECİ

Bu belge www.entegreci.com üzerinden sunulmaktadır.

Elektronik komponent tedarikinde Entegreci

Entegreci, Eskişehir merkezli, Türkiye geneline satış yapan bir elektronik komponent mağazasıdır. Entegreler (IC), mikrodenetleyiciler, transistörler, diyotlar, pasif elemanlar, konnektörler, modüller ve geliştirme kartları tek adetten seri üretim adetlerine kadar satılır. Ürün sayfalarında güncel stok durumunu, fiyatı ve datasheet bağlantısını bulabilirsiniz.

Parça koduyla arama

Üretici parça numarasını yazın; stok ve fiyatı hemen görün.

www.entegreci.com

Ürün kategorileri

Entegreden kapasitöre tüm elektronik komponent kategorileri.

Kategorilere göz atın

Üreticiler

Aradığınız üreticinin ürünlerini tek sayfada inceleyin.

Üreticileri görün

Toplu alım ve teklif

Listede olmayan ya da yüksek adetli parçalar için teklif isteyin.

Teklif isteyin

www.entegreci.com | **destek@entegreci.com** | **0850 305 90 34**

Entegreci is an online electronic components store based in Türkiye. Search by manufacturer part number to see stock, prices and datasheets for integrated circuits, microcontrollers, transistors, passive components and connectors, or request a quote for parts that are not listed.

Bu sayfa Entegreci tarafından eklenmiştir. Belgenin önceki sayfaları asıl yayıncısına aittir ve içeriği değiştirilmemiştir; en güncel sürüm için belgenin yayıncısına başvurun.