

Is Now Part of



ON Semiconductor®

To learn more about ON Semiconductor, please visit our website at
www.onsemi.com

Please note: As part of the Fairchild Semiconductor integration, some of the Fairchild orderable part numbers will need to change in order to meet ON Semiconductor's system requirements. Since the ON Semiconductor product management systems do not have the ability to manage part nomenclature that utilizes an underscore (_), the underscore (_) in the Fairchild part numbers will be changed to a dash (-). This document may contain device numbers with an underscore (_). Please check the ON Semiconductor website to verify the updated device numbers. The most current and up-to-date ordering information can be found at www.onsemi.com. Please email any questions regarding the system integration to Fairchild_questions@onsemi.com.

ON Semiconductor and the ON Semiconductor logo are trademarks of Semiconductor Components Industries, LLC dba ON Semiconductor or its subsidiaries in the United States and/or other countries. ON Semiconductor owns the rights to a number of patents, trademarks, copyrights, trade secrets, and other intellectual property. A listing of ON Semiconductor's product/patent coverage may be accessed at www.onsemi.com/site/pdf/Patent-Marking.pdf. ON Semiconductor reserves the right to make changes without further notice to any products herein. ON Semiconductor makes no warranty, representation or guarantee regarding the suitability of its products for any particular purpose, nor does ON Semiconductor assume any liability arising out of the application or use of any product or circuit, and specifically disclaims any and all liability, including without limitation special, consequential or incidental damages. Buyer is responsible for its products and applications using ON Semiconductor products, including compliance with all laws, regulations and safety requirements or standards, regardless of any support or applications information provided by ON Semiconductor. "Typical" parameters which may be provided in ON Semiconductor data sheets and/or specifications can and do vary in different applications and actual performance may vary over time. All operating parameters, including "Typicals" must be validated for each customer application by customer's technical experts. ON Semiconductor does not convey any license under its patent rights nor the rights of others. ON Semiconductor products are not designed, intended, or authorized for use as a critical component in life support systems or any FDA Class 3 medical devices or medical devices with a same or similar classification in a foreign jurisdiction or any devices intended for implantation in the human body. Should Buyer purchase or use ON Semiconductor products for any such unintended or unauthorized application, Buyer shall indemnify and hold ON Semiconductor and its officers, employees, subsidiaries, affiliates, and distributors harmless against all claims, costs, damages, and expenses, and reasonable attorney fees arising out of, directly or indirectly, any claim of personal injury or death associated with such unintended or unauthorized use, even if such claim alleges that ON Semiconductor was negligent regarding the design or manufacture of the part. ON Semiconductor is an Equal Opportunity/Affirmative Action Employer. This literature is subject to all applicable copyright laws and is not for resale in any manner.

April 2009

KA7500C
SMPS Controller

Features

- Internal Regulator Provides a Stable 5V Reference Supply Trimmed to ±1% Accuracy
- Uncommitted Output TR for 200mA Sink or Source Current
- Output Control for Push-Pull or Single-Ended Operation
- Variable Duty Cycle by Dead-Time Control (Pin 4) Complete PWM Control Circuit
- On-Chip Oscillator with Master or Slave Operation
- Internal Circuit Prohibits Double Pulse at Either Output

Description

The KA7500C is used for the control circuit of the pulse-width modulation switching regulator. The KA7500C consists of 5V reference voltage circuit, two error amplifiers, flip flop, an output control circuit, a PWM comparator, a dead-time comparator, and an oscillator.

This device can be operated in the switching frequency of 1kHz to 300kHz. The precision of voltage reference (V_{REF}) is improved up to ±1% with trimming. This provides a better output voltage regulation. The operating temperature range is -25°C ~ +85°C.

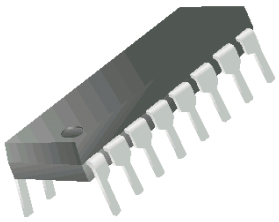

16-Lead DIP

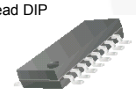

16-Lead SOP

Ordering Information

Part Number	Operating Temperature Range	Eco Status	Package	Packing Method
KA7500C	-25 to +85°C	RoHS	16-Lead Dual Inline Package (DIP)	Tube
KA7500CD			16-Lead Small Outline Package (SOP)	Tube
KA7500CDTF				Tape and Reel

For Fairchild's definition of Eco Status, please visit: http://www.fairchildsemi.com/company/green/rohs_green.html.

© 2003 Fairchild Semiconductor Corporation

Block Diagram

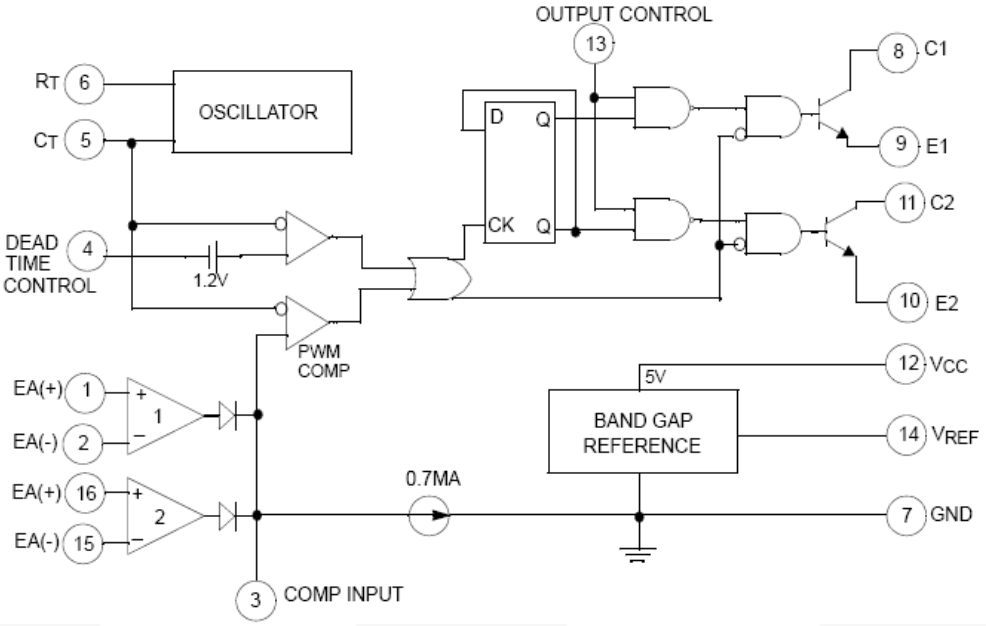

Figure 1. Block Diagram

Typical Application

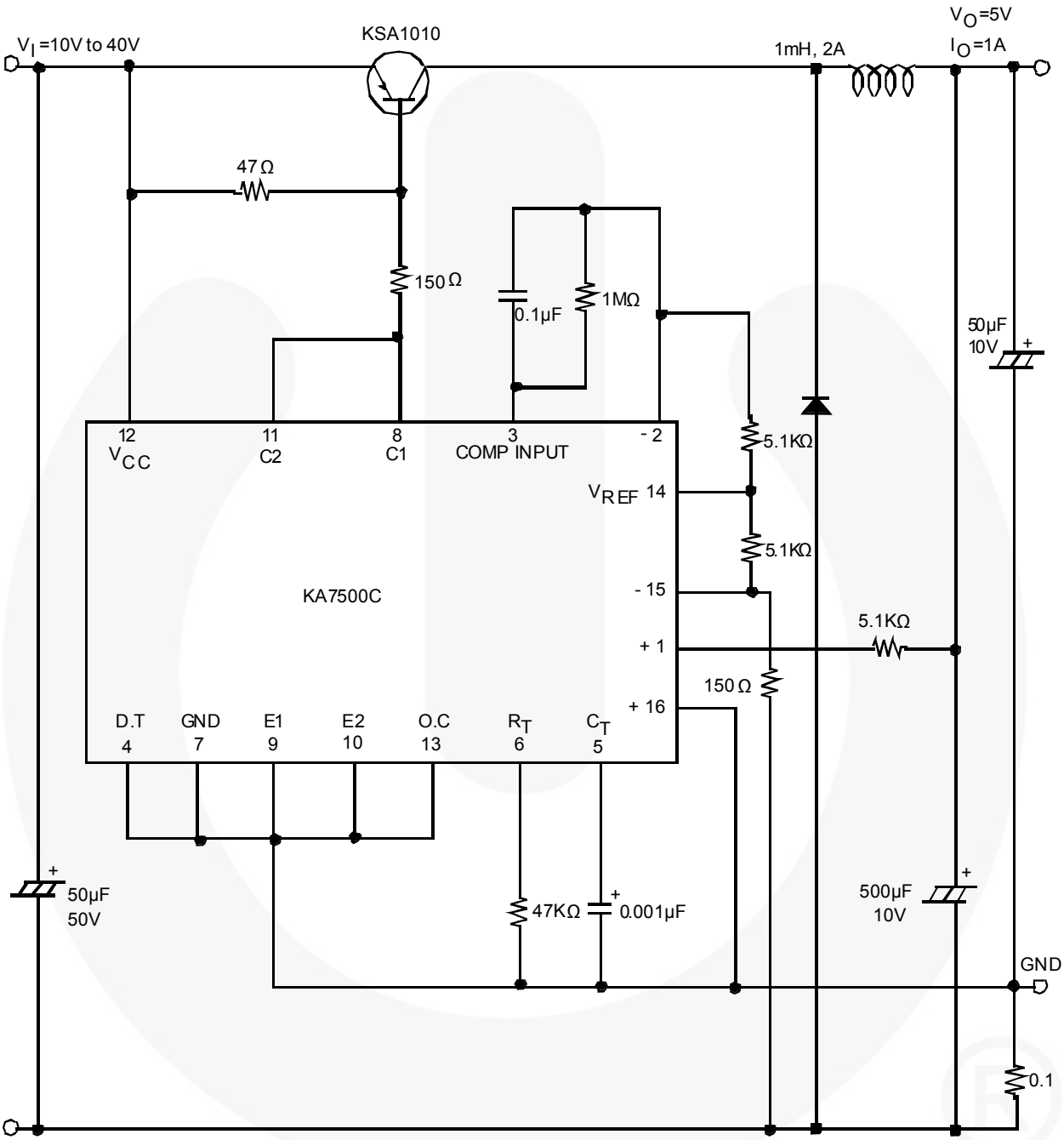

Figure 2. Pulse-Width Modulated Step-Down Converter

Absolute Maximum Ratings

Stresses exceeding the absolute maximum ratings may damage the device. The device may not function or be operable above the recommended operating conditions and stressing the parts to these levels is not recommended. In addition, extended exposure to stresses above the recommended operating conditions may affect device reliability. The absolute maximum ratings are stress ratings only.

Symbol	Parameter		Min.	Max.	Unit
V_{CC}	Supply Voltage			42	V
V_C	Collector Supply Voltage			42	V
I_O	Output Current			250	mA
V_{IN}	Amplifier Input Voltage			V_{CC} + 0.3	V
P_D	Power Dissipation	KA7500C		1	W
		KA7500CD		0.9	
T_{OPR}	Operation Temperature Range		-25	+85	°C
T_{STG}	Storage Temperature Rang		-65	+150	°C
T_J	Junction Temperature			+125	°C

Recommended Operating Conditions

The Recommended Operating Conditions table defines the conditions for actual device operation. Recommended operating conditions are specified to ensure optimal performance to the datasheet specifications. Fairchild does not recommend exceeding them or designing to Absolute Maximum Ratings.

Symbol	Parameter	Min.	Typ.	Max.	Unit
V_{CC}	Power Supply Voltage	7	15	40	V
V_{C1}, V_{C2}	Collector Supply Voltage		30	40	V
I_{C1}, I_{C2}	Collector Output Current (Each Transition)			200	mA
V_{IN}	Amplifier Input Voltage	0.3		V_{CC} - 2.0	V
I_{FB}	Current Into Feedback Terminal			0.3	mA
I_{REF}	Reference Output Terminal			10	mA
R_T	Timing Resistor	1.8	30.0	500.0	KΩ
C_T	Timing Capacitor	0.0047	0.0010	10.0000	µA
f_{OSC}	Oscillator Frequency	1	40	200	kHz
V_{IN_PWM}	PWM Input Voltage (Pins 3, 4, and 13)	0.3		5.3	V

© 2003 Fairchild Semiconductor Corporation

Electrical Characteristics

V_{CC} = 20V, f = 10kHz, T_A = -25°C to +85°C, unless otherwise specified.

Symbol	Parameter	Conditions	Min.	Typ.	Max.	Units
Reference Section						
V_{REF}	Reference Output Voltage	I_{REF}=1mA, T_A=25°C[1]	4.95	5.00	5.05	V
		I_{REF}=1mA	4.90	5.00	5.10	
R_{LINE}	Line Regulation	V_{CC}=7V to 40V		2	25	mV
R_{LOAD}	Load Regulation	I_{REF}=1mA to 10mA		1	15	mV
I_{SC}	Short-Circuit Output Current	V_{REF}=0V	10	35	50	mA
Oscillation Frequency						
f_{OSC}	Oscillation Frequency	C_T=0.001µF, R_T=30KΩ		40.0		kHz
		C_T=0.01µF, R_T=12KΩ, T_A=25°C	9.2	10.0	10.8	
		C_T=0.01µF, R_T=12KΩ, T_A=T_{LOW} to T_{HIGH}	9.0		12.0	
$\Delta f/\Delta t$	Frequency Change with Temperature	C_T=0.01µF, R_T=12KΩ			2	%
Dead-Time Control Section						
I_{BIAS}	Input Bias Current	V_{CC}=15V, 0V≤ V_4≤ 5.25V		-2	-10	µA
$D_{(MAX)}$	Maximum Duty Cycle	V_{CC}=15V, V_4=0V, OC Pin=V_{REF}	45			%
V_{ITH}	Input Threshold Voltage	Zero Duty Cycle		3.0	3.3	V
		Maximum Duty Cycle	0			
Error Amplifier Section						
V_{IO}	Input Offset Voltage	V_3=2.5V		2	10	mV
I_{IO}	Input Offset Current	V_3=2.5V		25	250	mA
I_{BIAS}	Input Bias Current	V_3=2.5V		0.2	1.0	µA
V_{CIM}	Common Mode Input Voltage	7V≤ V_{CC} ≤ 40V	-0.3		V_{CC}	V
G_{VO}	Open-Loop Voltage Gain	0.5V≤ V_3 ≤ 3.5V	70	95		dB
B_W	Unit-Gain Bandwidth			650		kHz
PWM Comparator Section						
V_{ITH}	Input Threshold Voltage	Zero Duty Cycle		4.0	4.5	V
I_{SINK}	Input Sink Current	V_3=0.7V	-0.3	-0.7		mA
Output Section						
$V_{CE(SAT)}$	Output Saturation Voltage Common Emitter	V_E=0V, I_C=200mA		1.0	1.3	V
$V_{CC(SAT)}$	Emitter-Follower	V_C=15V, I_E=-200mA		1.5	2.5	
$I_{C(OFF)}$	Collector Off-State Current	V_{CC}=40V, V_{CE}=40V		2	100	µA
$I_{E(OFF)}$	Emitter Off-State Current	V_{CC}=V_C=40V, V_E=40V			-100	
Total Device						
I_{CC}	Supply Current	Pin6=V_{REF}, V_{CC}=15V		6	10	mA
Output Switching Characteristics						
t_R	Rise Time, Common Emitter, Common Collector			100	200	ns
t_F	Fall Time, Common Emitter, Common Collector			25	100	

Note:

1. This is guaranteed where the marking code of the package surface is over 027.

© 2003 Fairchild Semiconductor Corporation

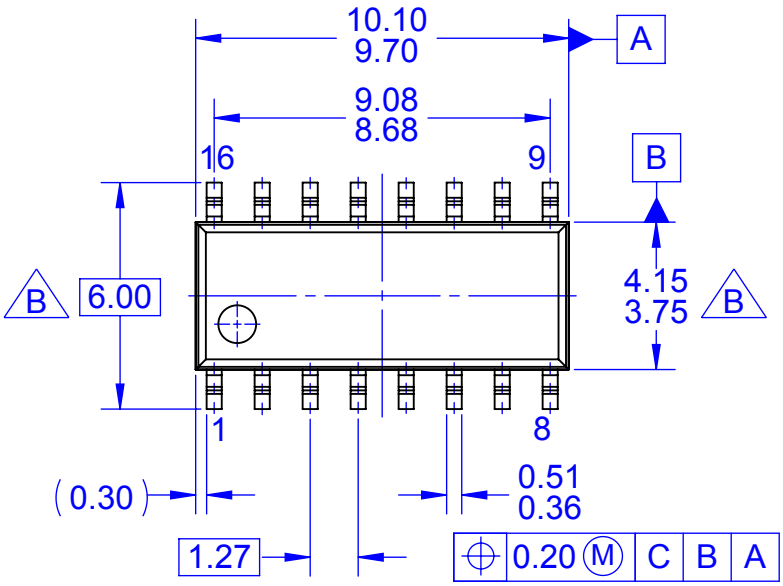

TOP VIEW

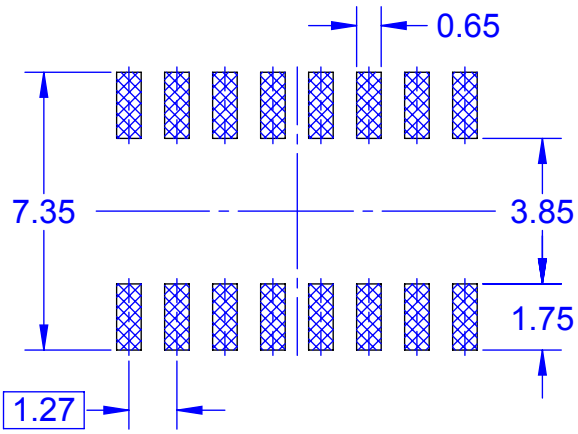

LAND PATTERN RECOMMENDATION

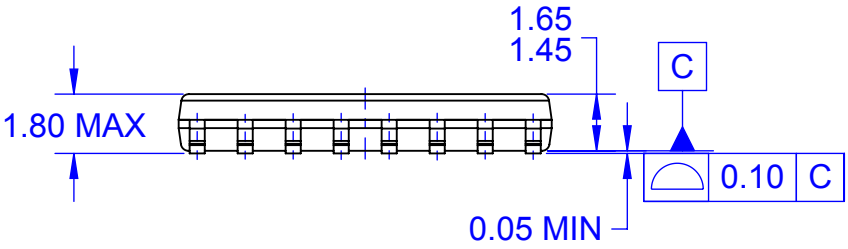

FRONT VIEW

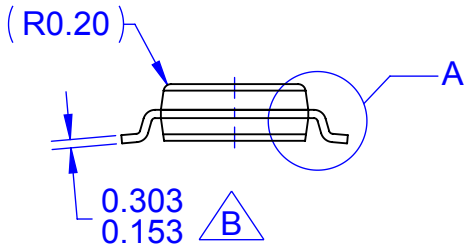

SIDE VIEW

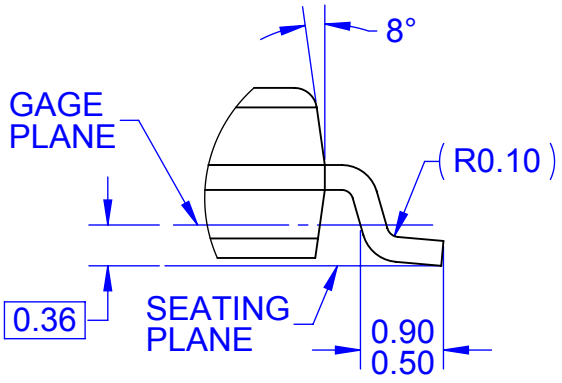

DETAIL A
SCALE 3:1

NOTES:

A. THIS DRAWING COMPLIES WITH JEDEC MS-012, EXCEPT AS NOTED

B THIS DIMENSION IS OUTSIDE JEDEC MS-012 VALUE

C. ALL DIMENSIONS ARE IN MILLIMETERS

D. DIMENSIONS ARE EXCLUSIVE OF BURRS, MOLD FLASH, AND TIE BAR EXTRUSIONS

E. LAND PATTERN STANDARD: SOIC127P600X175-16AM

F. DRAWING FILENAME: MKT-M16Erev2

FAIRCHILD ™

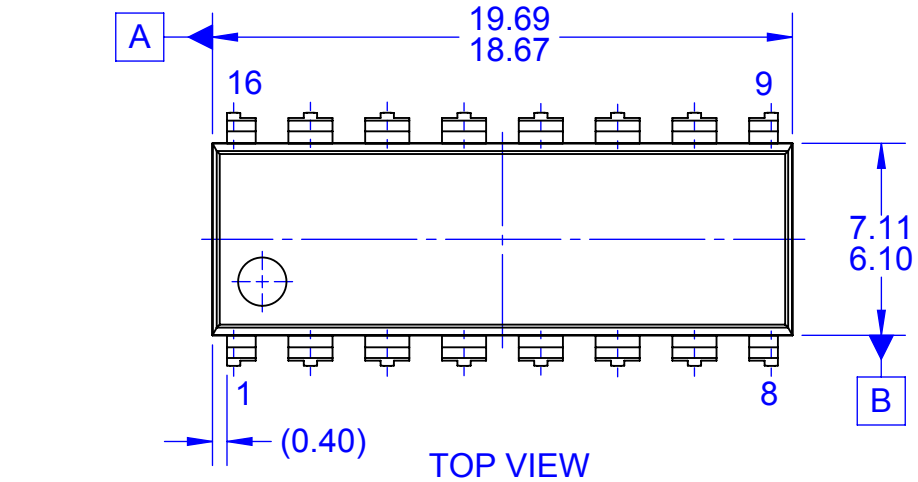

TOP VIEW

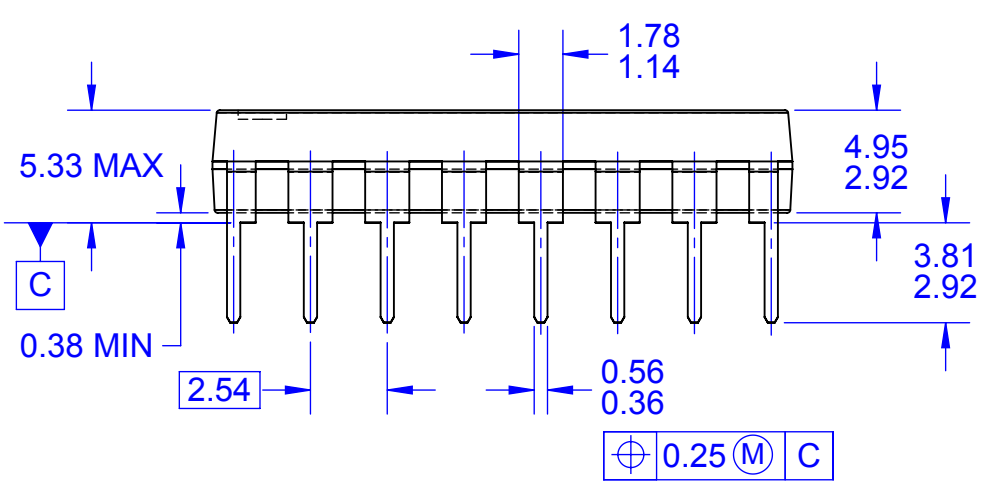

FRONT VIEW

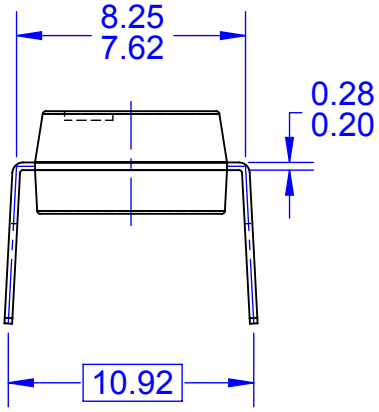

SIDE VIEW

NOTES:

A. CONFORMS TO JEDEC MS-001, VARIATION BB
B. ALL DIMENSIONS ARE IN MILLIMETERS
C. DIMENSIONS ARE EXCLUSIVE OF BURRS, MOLD FLASH, AND TIE BAR PROTRUSIONS
D. DIMENSIONS AND TOLERANCES PER ASME Y14.5M-2009
E. DRAWING FILENAME: MKT-N16Erev3

FAIRCHILD ™

ON Semiconductor and ON are trademarks of Semiconductor Components Industries, LLC dba ON Semiconductor or its subsidiaries in the United States and/or other countries. ON Semiconductor owns the rights to a number of patents, trademarks, copyrights, trade secrets, and other intellectual property. A listing of ON Semiconductor's product/patent coverage may be accessed at www.onsemi.com/site/pdf/Patent−Marking.pdf. ON Semiconductor reserves the right to make changes without further notice to any products herein. ON Semiconductor makes no warranty, representation or guarantee regarding the suitability of its products for any particular purpose, nor does ON Semiconductor assume any liability arising out of the application or use of any product or circuit, and specifically disclaims any and all liability, including without limitation special, consequential or incidental damages. Buyer is responsible for its products and applications using ON Semiconductor products, including compliance with all laws, regulations and safety requirements or standards, regardless of any support or applications information provided by ON Semiconductor. "Typical" parameters which may be provided in ON Semiconductor data sheets and/or specifications can and do vary in different applications and actual performance may vary over time. All operating parameters, including "Typicals" must be validated for each customer application by customer's technical experts. ON Semiconductor does not convey any license under its patent rights nor the rights of others. ON Semiconductor products are not designed, intended, or authorized for use as a critical component in life support systems or any FDA Class 3 medical devices or medical devices with a same or similar classification in a foreign jurisdiction or any devices intended for implantation in the human body. Should Buyer purchase or use ON Semiconductor products for any such unintended or unauthorized application, Buyer shall indemnify and hold ON Semiconductor and its officers, employees, subsidiaries, affiliates, and distributors harmless against all claims, costs, damages, and expenses, and reasonable attorney fees arising out of, directly or indirectly, any claim of personal injury or death associated with such unintended or unauthorized use, even if such claim alleges that ON Semiconductor was negligent regarding the design or manufacture of the part. ON Semiconductor is an Equal Opportunity/Affirmative Action Employer. This literature is subject to all applicable copyright laws and is not for resale in any manner.

PUBLICATION ORDERING INFORMATION

LITERATURE FULFILLMENT:
Literature Distribution Center for ON Semiconductor
19521 E. 32nd Pkwy, Aurora, Colorado 80011 USA
Phone: 303−675−2175 or 800−344−3860 Toll Free USA/Canada
Fax: 303−675−2176 or 800−344−3867 Toll Free USA/Canada
Email: orderlit@onsemi.com

N. American Technical Support: 800−282−9855 Toll Free USA/Canada
Europe, Middle East and Africa Technical Support:
Phone: 421 33 790 2910
Japan Customer Focus Center
Phone: 81−3−5817−1050

ON Semiconductor Website: **www.onsemi.com**

Order Literature: http://www.onsemi.com/orderlit

For additional information, please contact your local Sales Representative

ENTEGRECİ

Bu belge www.entegreci.com üzerinden sunulmaktadır.

Elektronik komponent tedarikinde Entegreci

Entegreci, Eskişehir merkezli, Türkiye geneline satış yapan bir elektronik komponent mağazasıdır. Entegreler (IC), mikrodenetleyiciler, transistörler, diyotlar, pasif elemanlar, konnektörler, modüller ve geliştirme kartları tek adetten seri üretim adetlerine kadar satılır. Ürün sayfalarında güncel stok durumunu, fiyatı ve datasheet bağlantısını bulabilirsiniz.

Parça koduyla arama

Üretici parça numarasını yazın; stok ve fiyatı hemen görün.

www.entegreci.com

Ürün kategorileri

Entegreden kapasitöre tüm elektronik komponent kategorileri.

Kategorilere göz atın

Üreticiler

Aradığınız üreticinin ürünlerini tek sayfada inceleyin.

Üreticileri görün

Toplu alım ve teklif

Listede olmayan ya da yüksek adetli parçalar için teklif isteyin.

Teklif isteyin

www.entegreci.com | **destek@entegreci.com** | **0850 305 90 34**

Entegreci is an online electronic components store based in Türkiye. Search by manufacturer part number to see stock, prices and datasheets for integrated circuits, microcontrollers, transistors, passive components and connectors, or request a quote for parts that are not listed.

Bu sayfa Entegreci tarafından eklenmiştir. Belgenin önceki sayfaları asıl yayıncısına aittir ve içeriği değiştirilmemiştir; en güncel sürüm için belgenin yayıncısına başvurun.