JCS7HN60C

主要参数 MAIN CHARACTERISTICS

I_D	7.0 A
V_{DSS}	600 V
Rdson-max (@Vgs=10V)	1.3Ω
Qg-typ	32 nC

封装 Package

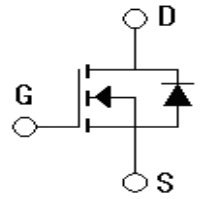

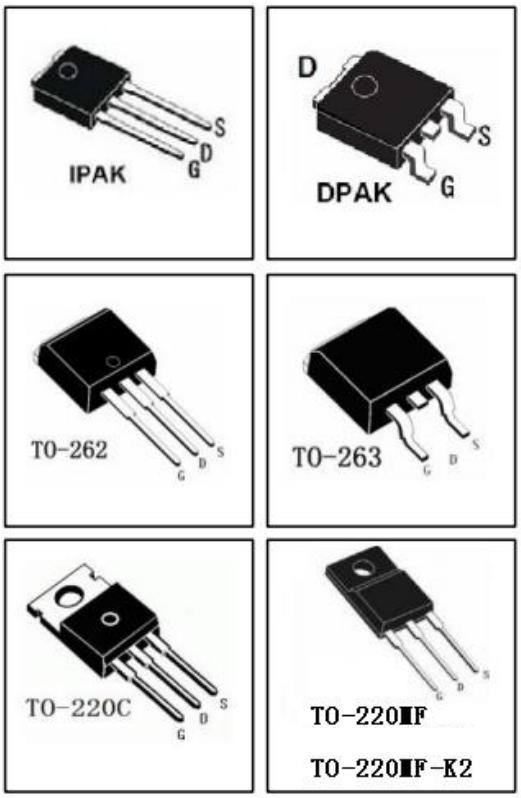

用途

- 高频开关电源
- 电子镇流器
- LED 电源

APPLICATIONS

- High frequency switching mode power supply
- Electronic ballast
- LED power supply

产品特性

- 低栅极电荷
- 低 C_{rss} (典型值 14pF)
- 开关速度快
- 产品全部经过雪崩测试
- 高抗 dv/dt 能力
- RoHS 产品

FEATURES

- Low gate charge
- Low C_{rss} (typical 14pF)
- Fast switching
- 100% avalanche tested
- Improved dv/dt capability
- RoHS product

订货信息 ORDER MESSAGE

订 货 型 号 Order codes				印 记 Marking	封 装 Package
有卤-条管 Halogen-Tube	无卤-条管 Halogen-Free-Tube	有卤-编带 Halogen-Reel	无卤-编带 Halogen-Free -Reel		
JCS7HN60VC-V-B	JCS7HN60VC-V-BR	N/A	N/A	JCS7HN60V	IPAK
JCS7HN60RC-R-B	JCS7HN60RC-R-BR	JCS7HN60RC-R-A	JCS7HN60RC-R-AR	JCS7HN60R	DPAK
JCS7HN60BC-B-B	JCS7HN60BC-B-BR	N/A	N/A	JCS7HN60B	TO-262
JCS7HN60SC-S-B	JCS7HN60SC-S-BR	JCS7HN60SC-S-A	JCS7HN60SC-S-AR	JCS7HN60S	TO-263
JCS7HN60CC-C-B	JCS7HN60CC-C-BR	N/A	N/A	JCS7HN60C	TO-220C
JCS7HN60FC-F-B	JCS7HN60FC-F-BR	N/A	N/A	JCS7HN60F	TO-220MF
JCS7HN60FC-F2-B	JCS7HN60FC-F2-BR	N/A	N/A	JCS7HN60F	TO-220MF-K2

绝对最大额定值 ABSOLUTE RATINGS (Tc=25℃)

项 目 Parameter	符 号 Symbol	数 值 Value			单位 Unit
		JCS7HN60 CC/SC/BC/VC/RC	JCS7HN60FC	JCS7HN60F C-K2	
最高漏极－源极直流电压 Drain-Source Voltage	V_{DSS}	600	600		V
连续漏极电流 Drain Current -continuous	I_D T=25℃	7.0	7.0*		A
	T=100℃	4.6	4.6*		A
最大脉冲漏极电流（注 1） Drain Current - pulse （note 1）	I_{DM}	28	28*		A
最高栅源电压 Gate-Source Voltage	V_{GSS}	±30			V
单脉冲雪崩能量（注 2） Single Pulsed Avalanche Energy（note 2）	E_{AS}	420			mJ
雪崩电流（注 1） Avalanche Current（note 1）	I_{AR}	7.0			A
重复雪崩能量（注 1） Repetitive Avalanche Energy（note 1）	E_{AR}	12.8			mJ
二极管反向恢复最大电压变化速率（注 3） Peak Diode Recovery dv/dt （note 3）	dv/dt	4.5			V/ns
耗散功率 Power Dissipation	P_D T_C=25℃	120	40	30.2	W
	-Derate above 25℃	1.04	0.31	0.24	W/℃
最高结温及存储温度 Operating and Storage Temperature Range	T_J，T_{STG}	-55～+150			℃
引线最高焊接温度 Maximum Lead Temperature for Soldering Purposes	T_L	300			℃

*漏极电流由最高结温限制

*Drain current limited by maximum junction temperature

电特性 ELECTRICAL CHARACTERISTICS

项　　目 Parameter	符　号 Symbol	测试条件 Tests conditions	最小 Min	典型 Typ	最 大 Max	单　位 Units
关态特性 Off –Characteristics						
漏－源击穿电压 Drain-Source Voltage	BV_{DSS}	I_D=250μA, V_{GS}=0V	600	-	-	V
击穿电压温度特性 Breakdown Voltage Temperature Coefficient	$\Delta BV_{DSS}/\Delta T_J$	I_D=250μA, referenced to 25℃	-	0.59	-	V/℃
零栅压下漏极漏电流 Zero Gate Voltage Drain Current	I_{DSS}	V_{DS}=600V,V_{GS}=0V, T_C=25℃	-	-	10	μA
		V_{DS}=480V, T_C=125℃	-	-	100	μA
正向栅极体漏电流 Gate-body leakage current, forward	I_{GSSF}	V_{DS}=0V, V_{GS} =30V	-	-	100	nA
反向栅极体漏电流 Gate-body leakage current, reverse	I_{GSSR}	V_{DS}=0V, V_{GS} =-30V	-	-	-100	nA
通态特性 On-Characteristics						
阈值电压 Gate Threshold Voltage	$V_{GS(th)}$	V_{DS} = V_{GS}， I_D=250μA	2.0	-	4.0	V
静态导通电阻 Static Drain-Source On-Resistance	$R_{DS(ON)}$	V_{GS} =10V， I_D=3.5A	0.5	1.0	1.3	Ω
		V_{GS} =10V， I_D=3.5A 100℃	0.5	1.75	3.5	Ω
		V_{GS} =10V， I_D=3.5A 150℃	0.5	2.6	6	Ω
正向跨导 Forward Transconductance	g_{fs}	V_{DS} = 40V, I_D=7.0A（note 4）	-	5.6	-	S
动态特性 Dynamic Characteristics						
栅极电阻 Gate resistance	Rg	F=1.0MHz open drain	1.0	-	4.0	Ω
输入电容 Input capacitance	C_{iss}	V_{DS}=25V,V_{GS} =0V, f=1.0MHz	200	1100	1600	pF
输出电容 Output capacitance	C_{oss}		50	251	300	pF
反向传输电容 Reverse transfer capacitance	C_{rss}		3	14	20	pF

电特性 ELECTRICAL CHARACTERISTICS

开关特性 Switching Characteristics						
延迟时间 Turn-On delay time	$t_d(on)$	V_{DD}=300V,I_D=7A,R_G=25Ω （note 4，5）	-	11	31	ns
上升时间 Turn-On rise time	t_r		-	35	80	ns
延迟时间 Turn-Off delay time	$t_d(off)$		-	46	95	ns
下降时间 Turn-Off Fall time	t_f		-	40	92	ns
栅极电荷总量 Total Gate Charge	Q_g	V_{DS} =480V , I_D=7A V_{GS} =10V （note 4，5）	-	32	60	nC
栅－源电荷 Gate-Source charge	Q_{gs}		-	6	15	nC
栅－漏电荷 Gate-Drain charge	Q_{gd}		-	15	32	nC
漏－源二极管特性及最大额定值 **Drain-Source Diode Characteristics and Maximum Ratings**						
正向最大连续电流 Maximum Continuous Drain -Source Diode Forward Current	I_S		-	-	7.0	A
正向最大脉冲电流 Maximum Pulsed Drain-Source Diode Forward Current	I_{SM}		-	-	28	A
正向压降 Drain-Source Diode Forward Voltage	V_{SD}	V_{GS}=0V, I_S=7.0A	-	-	1.4	V
反向恢复时间 Reverse recovery time	t_{rr}	V_{GS}=0V, I_S=7.0A dI_F/dt=100A/μs (note 4)	-	345	700	ns
反向恢复电荷 Reverse recovery charge	Q_{rr}		-	3.2	6.4	μC

热特性 THERMAL CHARACTERISTIC

项 目 **Parameter**	符 号 **Symbol**	最大 **Max** JCS7HN60VC/ RC/CC/SC/BC	JCS7HN60FC TO-220MF	JCS7HN60FC TO-220MF- K2	单 位 **Unit**
结到管壳的热阻 Thermal Resistance, Junction to Case	Rth(j-c)	1.04	3.2	4.16	℃/W
结到环境的热阻 Thermal Resistance, Junction to Ambient	$R_{th(j-A)}$	62.5	62.5	62.5	℃/W

注释：

1：脉冲宽度由最高结温限制

2：L=29mH, I_{AS}=7.0A, V_{DD}=50V, R_G=25 Ω,起始结温 T_J=25℃

3：I_{SD}≤7.0A,di/dt≤300A/μs,VDD≤BV_{DSS},起始结温 T_J=25℃

4：脉冲测试：脉冲宽度≤300μs,占空比≤2%

5：基本与工作温度无关

Notes:

1：Pulse width limited by maximum junction temperature

2：L=29mH, I_{AS}=7.0A, V_{DD}=50V, R_G=25 Ω,Starting T_J=25℃

3：I_{SD}≤7.0A,di/dt≤300A/μs,VDD≤BV_{DSS}, Starting T_J=25℃

4：Pulse Test：Pulse Width ≤300μs,Duty Cycle≤2%

5：Essentially independent of operating temperature

特征曲线 ELECTRICAL CHARACTERISTICS (curves)

On-Region Characteristics

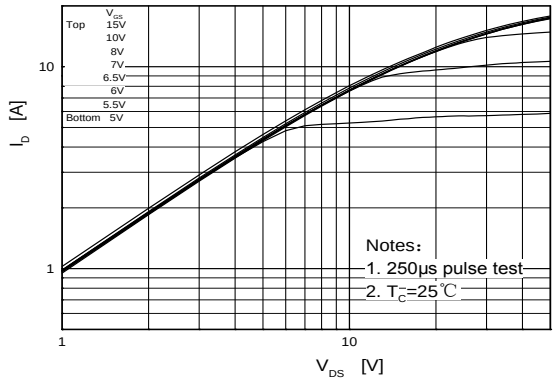

Transfer Characteristics

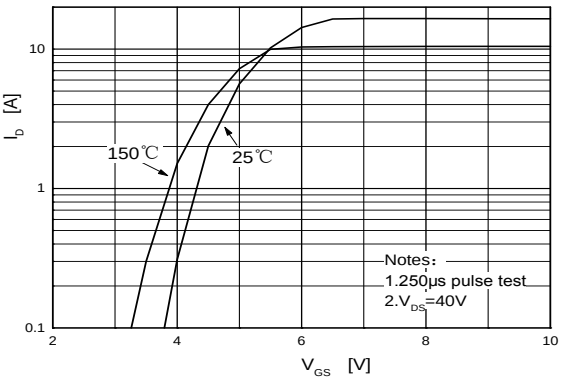

On-Resistance Variation vs. Drain Current and Gate Voltage

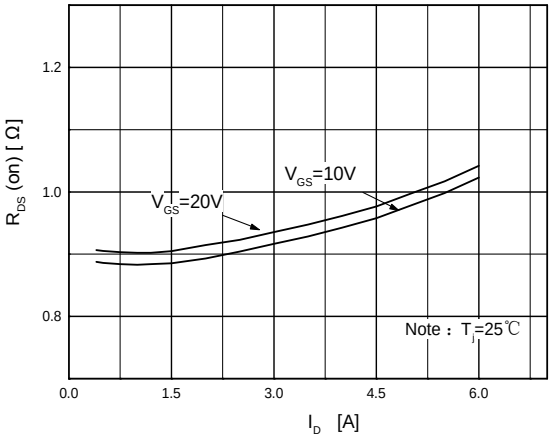

Body Diode Forward Voltage Variation vs. Source Current and Temperature

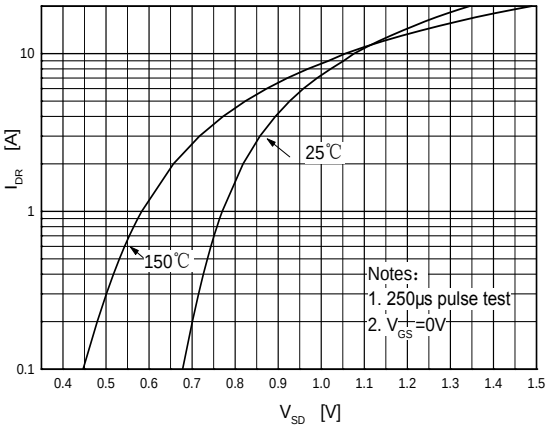

Capacitance Characteristics

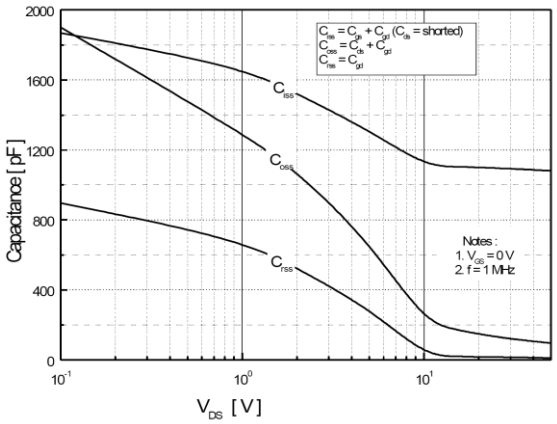

Gate Charge Characteristics

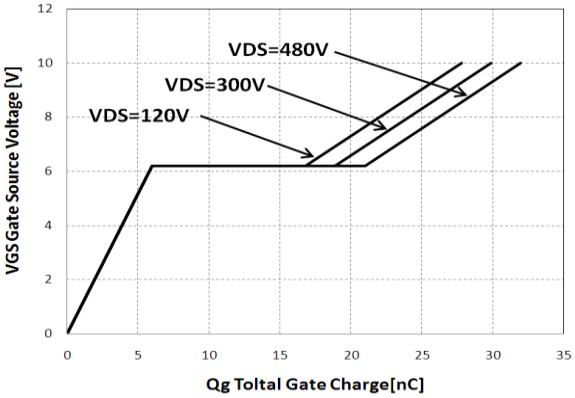

特征曲线 ELECTRICAL CHARACTERISTICS (curves)

Breakdown Voltage Variation vs. Temperature

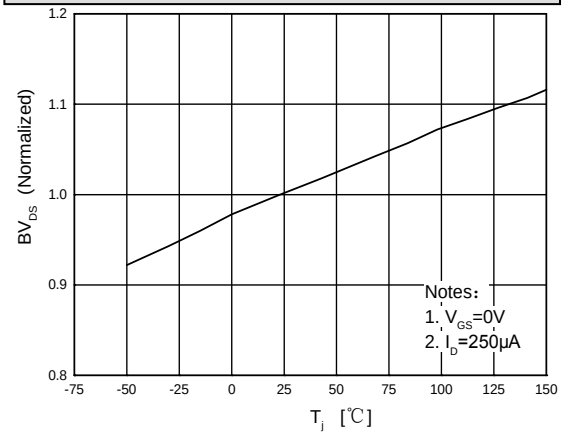

On-Resistance Variation vs. Temperature

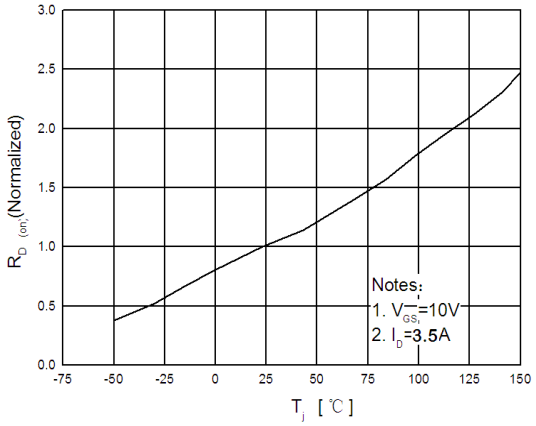

Maximum Safe Operating Area For JCS7HN60CC/SC/BC/RC/VC

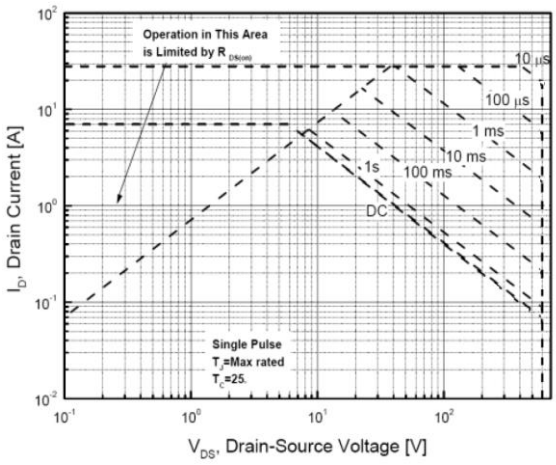

Maximum Safe Operating Area For JCS7HN60FC(TO-220MF)

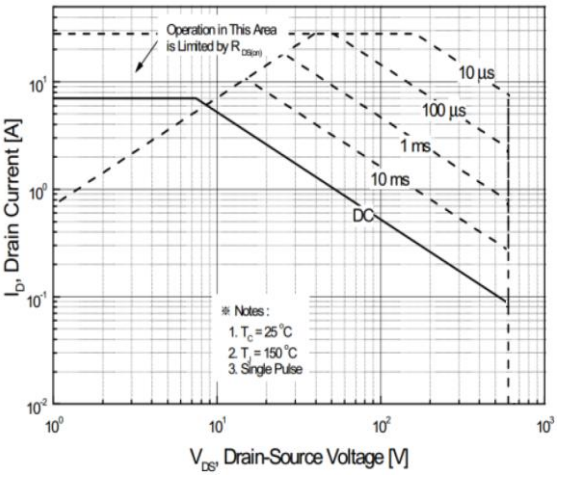

Maximum Safe Operating Area For JCS7HN60FC(TO-220MF-K2)

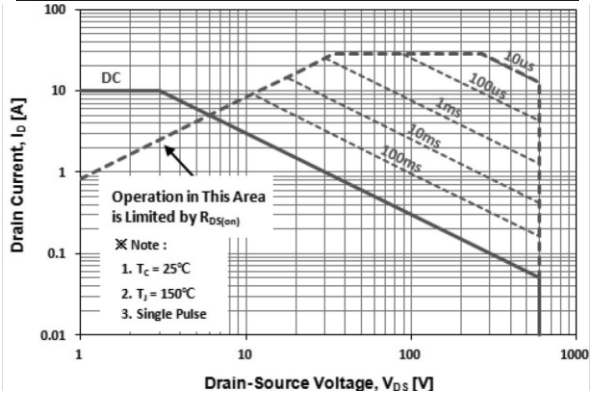

Maximum Drain Current vs. Case Temperature

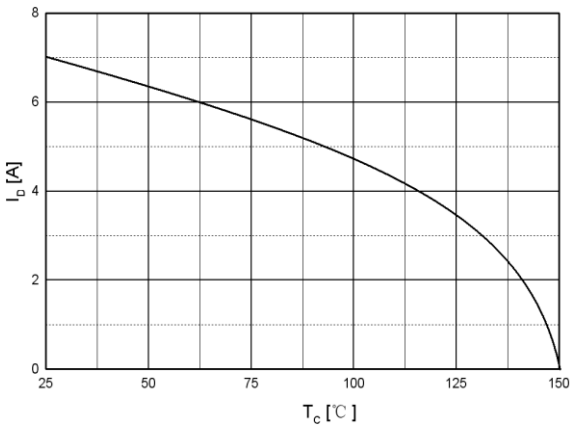

Avalanche Energy vs. Temperature

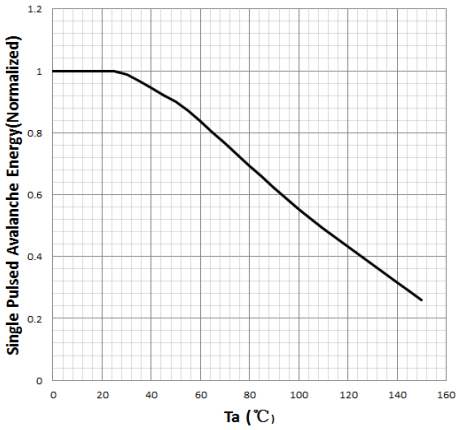

Power Disspation vs. Temperature

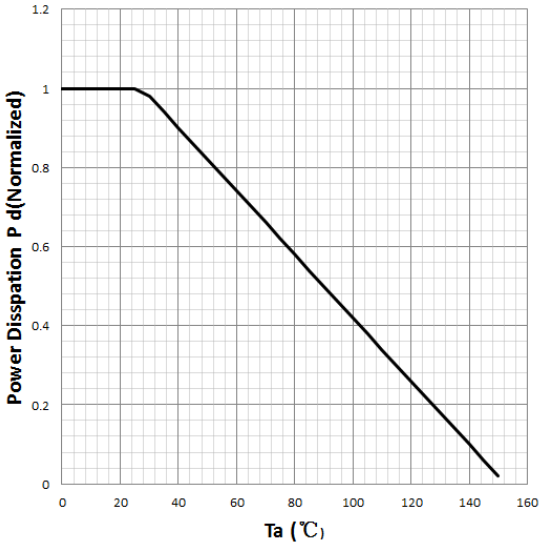

特征曲线 ELECTRICAL CHARACTERISTICS (curves)

Transient Thermal Response Curve For JCS7HN60CB/SB/BB/RC/VC

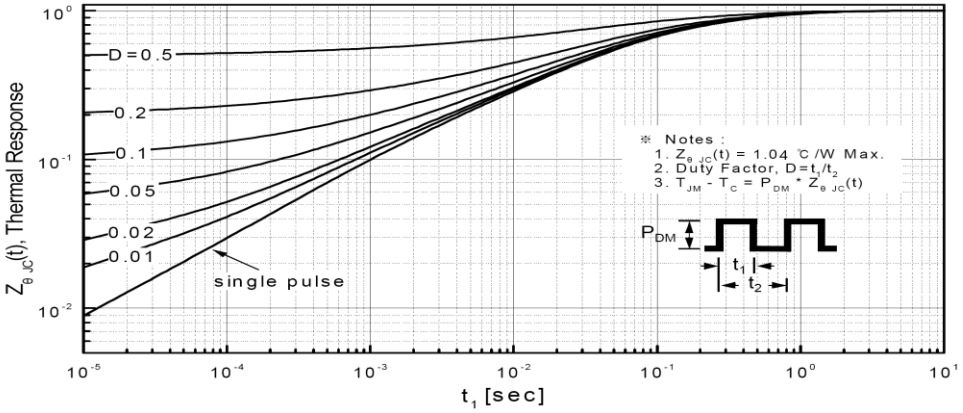

Transient Thermal Response Curve For JCS7HN60FC(TO-220MF)

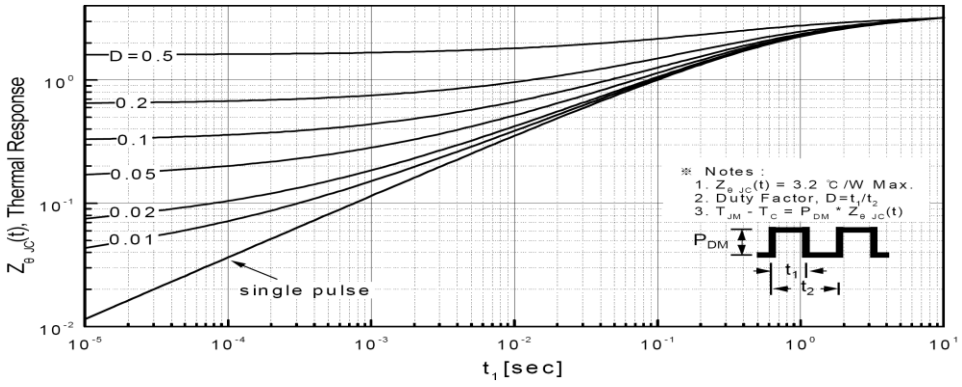

Transient Thermal Response Curve For JCS7HN60FC(TO-220MF-K2)

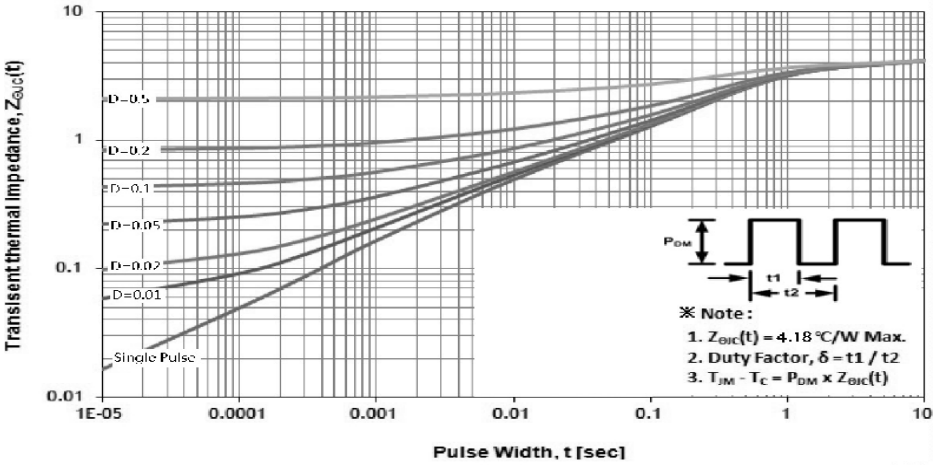

外形尺寸 **PACKAGE MECHANICAL DATA**

IPAK

单位 Unit：mm

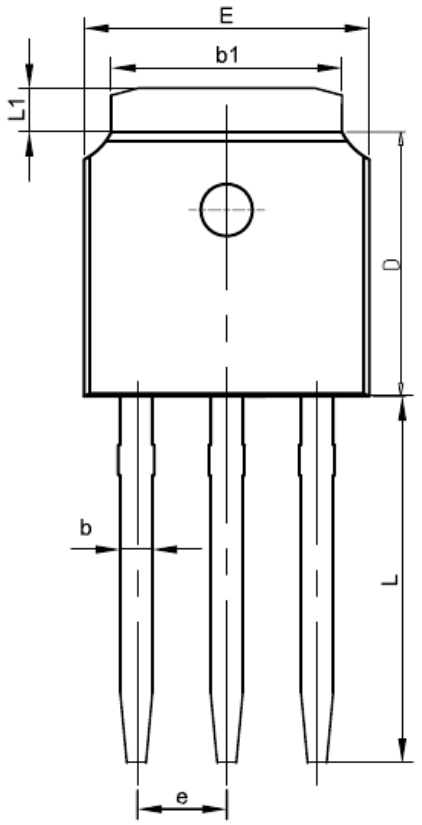

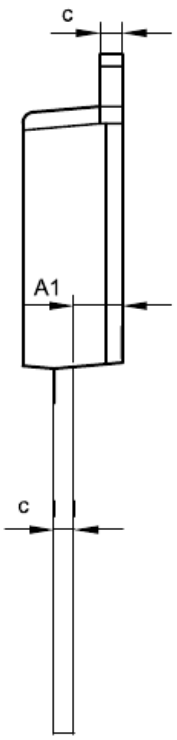

SYMBOL	MM	
	MIN	MAX
A	2.1	2.5
A1	0.87	1.27
b	0.63	0.93
b1	5.13	5.53
c	0.40	0.60
D	5.80	6.40
E	6.30	6.90
L	9.10	9.70
e	2.286BSC	
L1	0.82	1.22

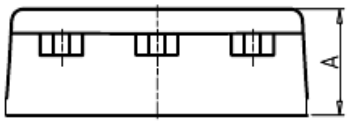

外形尺寸 PACKAGE MECHANICAL DATA

DPAK

单位 Unit：mm

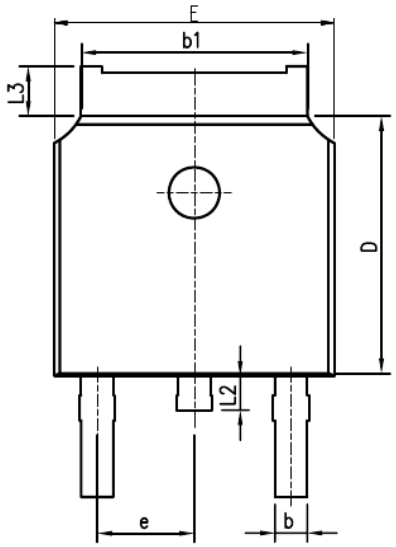

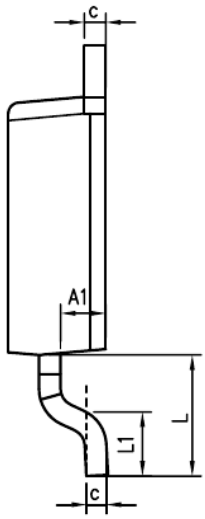

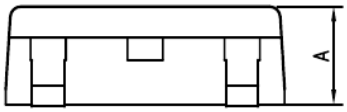

SYMBOL	mm	
	MIN	MAX
A	2.16	2.41
A1	0.97	1.17
A2	0.00	0.15
b	0.63	0.93
b1	5.13	5.53
b2	0.66	0.96
c	0.40	0.60
D	5.80	6.40
E	6.30	6.90
e	2.286BSC	
L	2.50	3.30
L1	1.20	1.80
L2	0.60	1.00
L3	0.85	1.30

编带 REEL

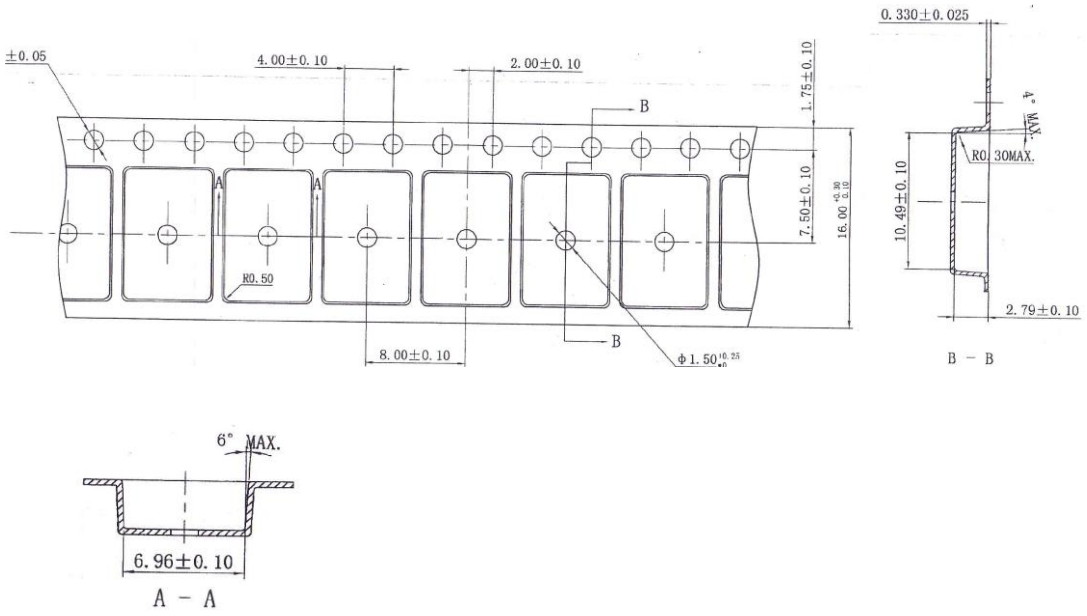

外形尺寸 **PACKAGE MECHANICAL DATA**

TO-220C

单位 Unit：mm

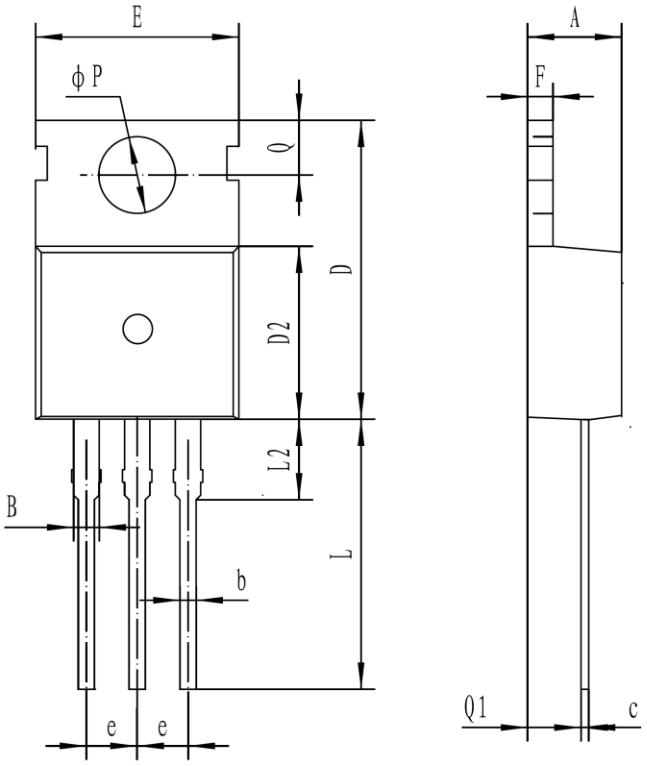

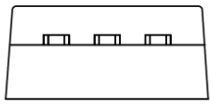

符号 symbol	MIN	MAX
A	4.30	4.70
B	1.10	1.40
b	0.70	0.95
c	0.40	0.65
D	15.20	16.20
D2	9.00	9.40
E	9.70	10.10
e	2.39	2.69
F	1.25	1.40
L	12.60	13.60
L2	2.80	3.20
Q	2.60	3.00
Q1	2.20	2.60
P	3.50	3.80

外形尺寸 **PACKAGE MECHANICAL DATA**

TO-220MF

单位 Unit：mm

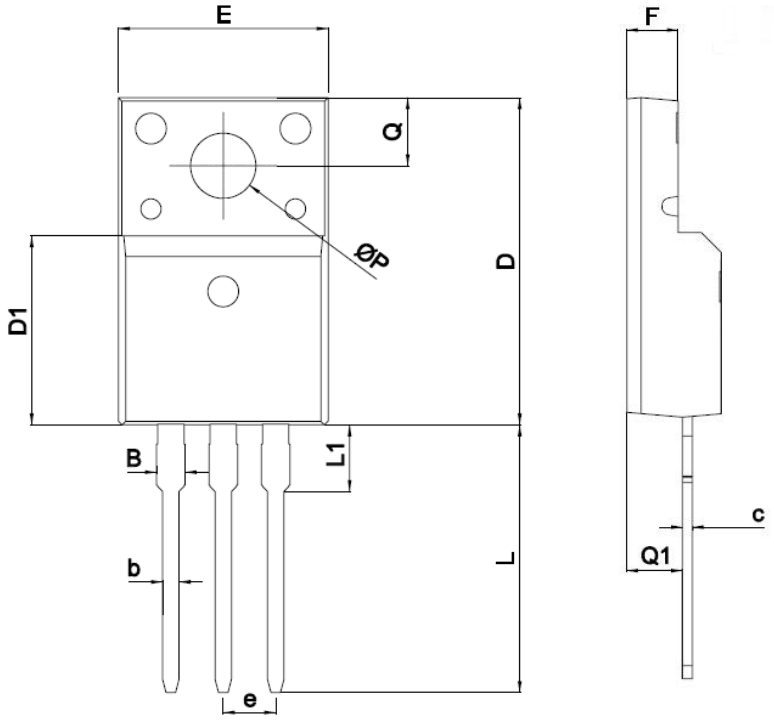

SYMBOL	mm	
	MIN	MAX
A	4.5	4.9
B		1.47
b	0.7	0.9
c	0.45	0.60
D	15.67	16.07
D1	9.04	9.20
e	2.54TYPE	
E	9.96	10.36
F	2.34	2.74
L	12.58	13.38
L1	3.13	3.33
Q	3.2	3.4
Q1	2.56	2.96
ΦP	3.08	3.28

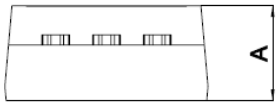

外形尺寸 PACKAGE MECHANICAL DATA

TO-220MF-K2

单位 Unit：mm

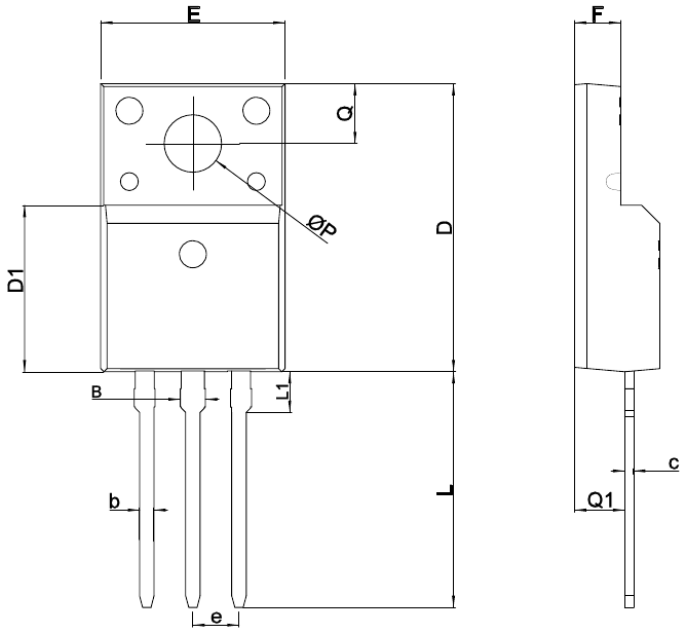



SYMBOL	mm	
	MIN	MAX
A	4.5	4.9
B		1.27
b	0.59	0.79
c	0.45	0.60
D	15.67	16.07
D1	8.97	9.37
e	2.54TYPE	
E	9.96	10.36
F	2.34	2.74
L	12.65	13.35
L1	1.80	2.20
Q	3.2	3.4
Q1	2.56	2.96
ΦP	3.08	3.28

外形尺寸 **PACKAGE MECHANICAL DATA**

TO-262 **单位 Unit：mm**

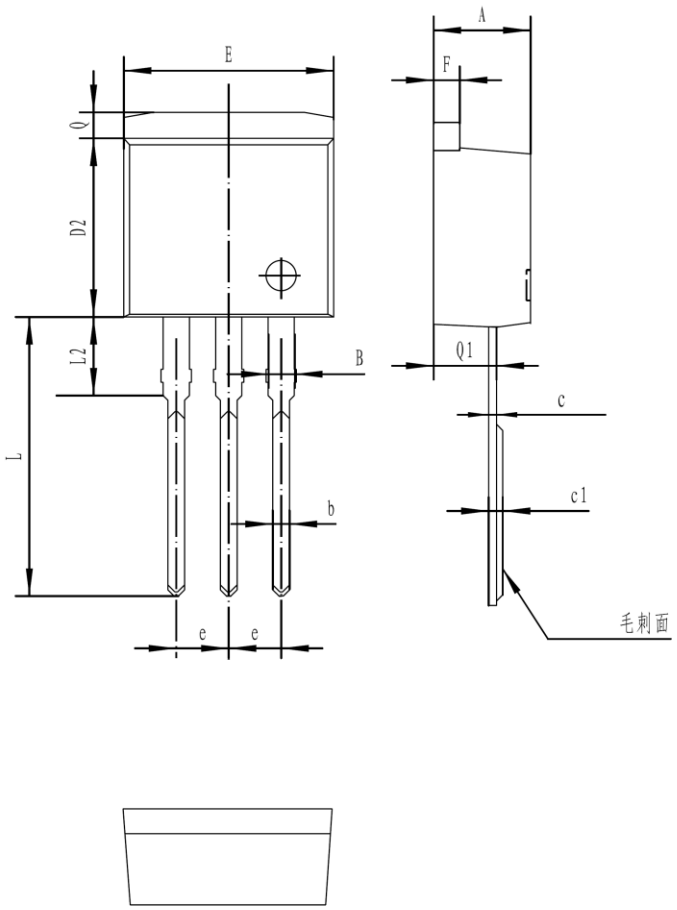

符号 symbol	MIN	MAX
A	4.40	4.90
B	1.10	1.40
b	0.70	0.95
c	0.30	0.60
c1	0.33	0.63
D2	8.20	9.20
E	9.60	10.50
e	2.39	2.69
F	1.20	1.35
L	13.11	14.61
L2	3.55	4.05
Q	1.10	1.40
Q1	2.65	2.85

外形尺寸 PACKAGE MECHANICAL DATA

TO-263

单位 Unit：mm

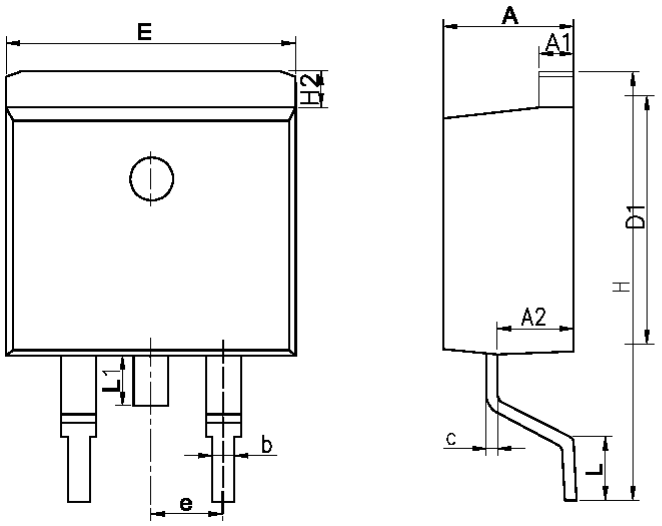

SYMBOL	MM	
	MIN	MAX
A	4.30	4.80
A1	1.12	1.42
A2	2.54	2.84
b	0.67	1.00
c	0.29	0.52
D1	8.40	9.00
E	9.80	10.46
e	2.54BSC	
H	14.00	16.00
H2	1.12	1.45
L	1.50	3.10
L1	1.45	1.70

编带 REEL

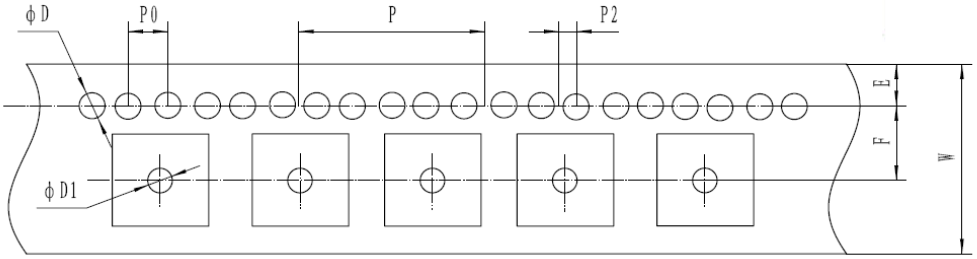

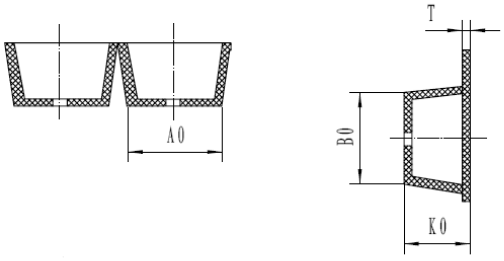

产品尺寸规格 (UNIT:mm)					
规格	W	A0	E	F	D
尺寸	24 ±0.3	10.9±0.1	1.75±0.1	11.5±0.1	1.5 +0.1/-0
规格	D1	P0	P2	P	T
尺寸	1.5 +0.1/-0	4±0.1	2±0.1	16±0.1	0.35±0.05
规格	K0	B0			
尺寸	4.9±0.1	16.0±0.1			

注意事项

1.吉林华微电子股份有限公司的产品销售分为直销和销售代理，无论哪种方式，订货时请与公司核实。

2.购买时请认清公司商标，如有疑问请与公司本部联系。

3.在电路设计时请不要超过器件的绝对最大额定值，否则会影响整机的可靠性。

4.本说明书如有版本变更不另外告知

NOTE

1. Jilin Sino-microelectronics co., Ltd sales its product either through direct sales or sales agent , thus, for customers, when ordering , please check with our company.
2. We strongly recommend customers check carefully on the trademark when buying our product, if there is any question, please don't be hesitate to contact us.
3. Please do not exceed the absolute maximum ratings of the device when circuit designing.
4. Jilin Sino-microelectronics co., Ltd reserves the right to make changes in this specification sheet and is subject to change without prior notice.

联系方式

吉林华微电子股份有限公司

公司地址：吉林省吉林市深圳街 99 号

邮编：132013
总机：86-432-64678411
传真：86-432-64665812
网址：www.hwdz.com.cn

市场营销部
地址：吉林省吉林市深圳街 99 号

邮编：132013
电话： 86-432-64675588
64675688
64678411
传真: 86-432-64671533

CONTACT

JILIN SINO-MICROELECTRONICS CO., LTD.

ADD: No.99 Shenzhen Street, Jilin City, Jilin Province, China.
Post Code: 132013
Tel： 86-432-64678411
Fax：86-432-64665812
Web Site：www.hwdz.com.cn

MARKET DEPARTMENT
ADD: No.99 Shenzhen Street, Jilin City, Jilin Province, China.
Post Code: 132013
Tel: 86-432-64675588
64675688
64678411
Fax: 86-432-64671533

ENTEGRECİ

Bu belge www.entegreci.com üzerinden sunulmaktadır.

Elektronik komponent tedarikinde Entegreci

Entegreci, Eskişehir merkezli, Türkiye geneline satış yapan bir elektronik komponent mağazasıdır. Entegreler (IC), mikrodenetleyiciler, transistörler, diyotlar, pasif elemanlar, konnektörler, modüller ve geliştirme kartları tek adetten seri üretim adetlerine kadar satılır. Ürün sayfalarında güncel stok durumunu, fiyatı ve datasheet bağlantısını bulabilirsiniz.

Parça koduyla arama

Üretici parça numarasını yazın; stok ve fiyatı hemen görün.

www.entegreci.com

Ürün kategorileri

Entegreden kapasitöre tüm elektronik komponent kategorileri.

Kategorilere göz atın

Üreticiler

Aradığınız üreticinin ürünlerini tek sayfada inceleyin.

Üreticileri görün

Toplu alım ve teklif

Listede olmayan ya da yüksek adetli parçalar için teklif isteyin.

Teklif isteyin

www.entegreci.com | **destek@entegreci.com** | **0850 305 90 34**

Entegreci is an online electronic components store based in Türkiye. Search by manufacturer part number to see stock, prices and datasheets for integrated circuits, microcontrollers, transistors, passive components and connectors, or request a quote for parts that are not listed.

Bu sayfa Entegreci tarafından eklenmiştir. Belgenin önceki sayfaları asıl yayıncısına aittir ve içeriği değiştirilmemiştir; en güncel sürüm için belgenin yayıncısına başvurun.