# JCS4N65B

## 主要参数 MAIN CHARACTERISTICS

| | |
|---|---|
| $I_D$ | 4.0 A |
| $V_{DSS}$ | 650 V |
| Rdson (Vgs=10V) -Max | 2.4Ω |
| Qg-Typ | 16.3nC |

封装 Package

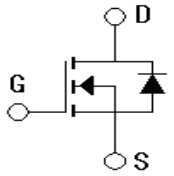


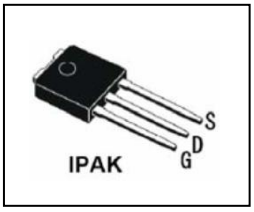


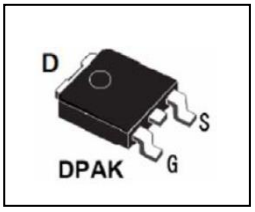


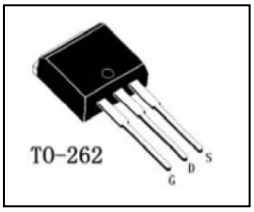


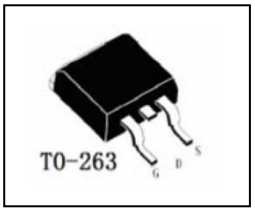


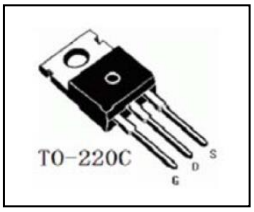


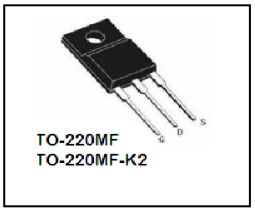


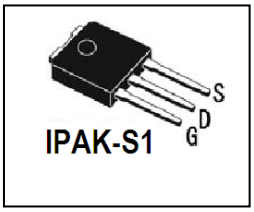


## 用途

- 高频开关电源
- 电子镇流器
- UPS 电源

## APPLICATIONS

- High efficiency switch mode power supplies
- Electronic lamp ballasts based on half bridge
- UPS

## 产品特性

- 低栅极电荷
- 低 $C_{rss}$ (典型值 2.83pF)
- 开关速度快
- 产品全部经过雪崩测试
- 高抗 dv/dt 能力
- RoHS 产品

## FEATURES

- Low gate charge
- Low $C_{rss}$ (typical 2.83pF )
- Fast switching
- 100% avalanche tested
- Improved dv/dt capability
- RoHS product

## 订货信息 ORDER MESSAGE

| 订 货 型 号 Order codes | | | | 印 记 Marking | 封 装 Package |
|---|---|---|---|---|---|
| 有卤-条管 Halogen-Tube | 无卤-条管 Halogen-Free-Tube | 有卤-编带 Halogen-Reel | 无卤-编带 Halogen-Free-Reel | | |
| JCS4N65VB-V-B | JCS4N65VB-V-BR | N/A | N/A | JCS4N65VB | IPAK |
| JCS4N65RB-R-B | JCS4N65RB-R-BR | JCS4N65RB-R-A | JCS4N65RB-R-AR | JCS4N65RB | DPAK |
| JCS4N65BB-B-B | JCS4N65BB-B-BR | N/A | N/A | JCS4N65BB | TO-262 |
| JCS4N65SB-S-B | JCS4N65SB-S-BR | JCS4N65SB-S-A | JCS4N65SB-S-AR | JCS4N65SB | TO-263 |
| JCS4N65CB-C-B | JCS4N65CB-C-BR | N/A | N/A | JCS4N65CB | TO-220C |
| JCS4N65FB-F-B | JCS4N65FB-F-BR | N/A | N/A | JCS4N65FB | TO-220MF |
| JCS4N65FB-F2-B | JCS4N65FB-F2-BR | N/A | N/A | JCS4N65FB | TO-220MF-K2 |
| JCS4N65VB-V1-B | JCS4N65VB-V1-BR | N/A | N/A | JCS4N65VB | IPAK-S1 |

## 绝对最大额定值 ABSOLUTE RATINGS (Tc=25℃)

| 项 目 Parameter | 符 号 Symbol | 数 值 Value | | | | 单位 Unit |
|---|---|---|---|---|---|---|
| | | JCS4N65VB/RB | JCS4N65CB/SB/BB | JCS4N65FB(TO-220MF) | JCS4N65FB(TO-220MF-K2) | |
| 最高漏极－源极直流电压 Drain-Source Voltage | $V_{DSS}$ | 650 | | | | V |
| 连续漏极电流 Drain Current -continuous | $I_D$T=25℃ | 4.0 | | 4.0* | | A |
| | T=100℃ | 3.0 | | 2.5* | | A |
| 最大脉冲漏极电流（注 1） Drain Current - pulse （note 1） | $I_{DM}$ | 16 | | 16* | | A |
| 最高栅源电压 Gate-Source Voltage | $V_{GSS}$ | ±30 | | | | V |
| 单脉冲雪崩能量（注 2） Single Pulsed Avalanche Energy (note 2） | $E_{AS}$ | 240 | | | | mJ |
| 雪崩电流（注 1） Avalanche Current （note 1） | $I_{AR}$ | 4.0 | | | | A |
| 重复雪崩能量（注 1） Repetitive Avalanche Current （note 1） | $E_{AR}$ | 10.0 | | | | mJ |
| 二极管反向恢复最大电压变化速率（注 3） Peak Diode Recovery dv/dt （note 3） | dv/dt | 5.5 | | | | V/ns |
| 耗散功率 Power Dissipation | $P_D$ $T_C$=25℃ | 117.9 | 148.6 | 51.7 | 42.4 | W |
| | -Derate above 25℃ | 0.943 | 1.189 | 0.41 | 0.34 | W/℃ |
| 绝缘耐压 (t=1s; TC =25 °C) Insulation withstand voltage | VISO | — | — | 2500 | 2500 | V |
| 最高结温及存储温度 Operating and Storage Temperature Range | $T_J$，$T_{STG}$ | -55～+150 | | | | ℃ |
| 引线最高焊接温度 Maximum Lead Temperature for Soldering Purposes | $T_L$ | 300 | | | | ℃ |

*漏极电流由最高结温限制

*Drain current limited by maximum junction temperature

## 电特性 ELECTRICAL CHARACTERISTICS

| 项　　目<br>Parameter | 符　号<br>Symbol | 测试条件<br>Tests conditions | 最小<br>Min | 典型<br>Typ | 最大<br>Max | 单　位<br>Units |
|---|---|---|---|---|---|---|
| **关态特性 Off –Characteristics** | | | | | | |
| 漏－源击穿电压<br>Drain-Source Voltage | $BV_{DSS}$ | $I_D$=250μA, $V_{GS}$=0V | 650 | - | - | V |
| 击穿电压温度特性<br>Breakdown Voltage Temperature Coefficient | $\Delta BV_{DSS}/\Delta T_J$ | $I_D$=250μA, referenced to 25℃ | - | 0.65 | - | V/℃ |
| 零栅压下漏极漏电流<br>Zero Gate Voltage Drain Current | $I_{DSS}$ | $V_{DS}$=650V,$V_{GS}$=0V, $T_C$=25℃ | - | - | 10 | μA |
| | | $V_{DS}$=500V, $T_C$=125℃ | - | - | 100 | μA |
| 正向栅极体漏电流<br>Gate-body leakage current, forward | $I_{GSSF}$ | $V_{DS}$=0V, $V_{GS}$ =30V | - | - | 100 | nA |
| 反向栅极体漏电流<br>Gate-body leakage current, reverse | $I_{GSSR}$ | $V_{DS}$=0V, $V_{GS}$ =-30V | - | - | -100 | nA |
| **通态特性 On-Characteristics** | | | | | | |
| 阈值电压<br>Gate Threshold Voltage | $V_{GS(th)}$ | $V_{DS}$ = $V_{GS}$ , $I_D$=250μA | 2.0 | - | 4.0 | V |
| 静态导通电阻<br>Static Drain-Source On-Resistance | $R_{DS(ON)}$ | $V_{GS}$ =10V , $I_D$=2A | - | 1.7 | 2.4 | Ω |
| 正向跨导<br>Forward Transconductance | $g_{fs}$ | $V_{DS}$ = 40V , $I_D$=2A（note 4） | - | 4.1 | - | S |
| **动态特性 Dynamic Characteristics** | | | | | | |
| 输入电容<br>Input capacitance | $C_{iss}$ | $V_{DS}$=25V, $V_{GS}$ =0V, f=1.0MHz | - | 671.8 | 900 | pF |
| 输出电容<br>Output capacitance | $C_{oss}$ | | - | 72.5 | 124 | pF |
| 反向传输电容<br>Reverse transfer capacitance | $C_{rss}$ | | - | 2.83 | 12 | pF |

## 电特性 ELECTRICAL CHARACTERISTICS

| | | | | | | |
|---|---|---|---|---|---|---|
| **开关特性 Switching Characteristics** | | | | | | |
| 延迟时间 Turn-On delay time | $t_d$(on) | $V_{DD}$=300V,$I_D$=4A,$R_G$=25Ω （note 4，5） | - | 22.7 | 42 | ns |
| 上升时间 Turn-On rise time | $t_r$ | | - | 20 | 111 | ns |
| 延迟时间 Turn-Off delay time | $t_d$(off) | | - | 43.2 | 102 | ns |
| 下降时间 Turn-Off Fall time | $t_f$ | | - | 17.6 | 84 | ns |
| 栅极电荷总量 Total Gate Charge | $Q_g$ | $V_{DS}$ =480V , $I_D$=4A $V_{GS}$ =10V （note 4，5） | - | 16.3 | 32 | nC |
| 栅－源电荷 Gate-Source charge | $Q_{gs}$ | | - | 3.84 | - | nC |
| 栅－漏电荷 Gate-Drain charge | $Q_{gd}$ | | - | 7.15 | - | nC |
| 漏－源二极管特性及最大额定值 **Drain-Source Diode Characteristics and Maximum Ratings** | | | | | | |
| 正向最大连续电流 Maximum Continuous Drain -Source Diode Forward Current | $I_S$ | | - | - | 4 | A |
| 正向最大脉冲电流 Maximum Pulsed Drain-Source Diode Forward Current | $I_{SM}$ | | - | - | 16 | A |
| 正向压降 Drain-Source Diode Forward Voltage | $V_{SD}$ | $V_{GS}$=0V, $I_S$=4.0A | - | - | 1.4 | V |
| 反向恢复时间 Reverse recovery time | $t_{rr}$ | $V_{GS}$=0V, $I_S$=4.0A $dI_F/dt$=100A/μs (note 4) | - | 480 | - | ns |
| 反向恢复电荷 Reverse recovery charge | $Q_{rr}$ | | - | 2.08 | - | μC |

## 热特性 THERMAL CHARACTERISTIC

| 项 目 Parameter | 符 号 Symbol | 最大 Max | | | | 单位 Unit |
|---|---|---|---|---|---|---|
| | | JCS4N65VB/RB | JCS4N65CB/SB/BB | JCS4N65FB(TO-220MF) | JCS4N65FB (TO-220MF-K2) | |
| 结到管壳的热阻 Thermal Resistance, Junction to Case | $R_{th(j-c)}$ | 1.06 | 0.841 | 2.42 | 2.95 | ℃/W |
| 结到环境的热阻 Thermal Resistance, Junction to Ambient | $R_{th(j-A)}$ | 80.2 | 60.2 | 41.56 | 46.78 | ℃/W |

注释：

1：脉冲宽度由最高结温限制

2：L=25mH, $I_{AS}$=4.0A, $V_{DD}$=50V, $R_G$=25 Ω,起始结温 $T_J$=25℃

3：$I_{SD}$ ≤4.0A,di/dt ≤200A/μs,VDD≤$BV_{DSS}$,起始结温 $T_J$=25℃

4：脉冲测试：脉冲宽度≤300μs,占空比≤2%

5：基本与工作温度无关

Notes:

1：Pulse width limited by maximum junction temperature

2：L=25mH, $I_{AS}$=4.0A, $V_{DD}$=50V, $R_G$=25 Ω,Starting $T_J$=25℃

3：$I_{SD}$ ≤4.0A,di/dt ≤200A/μs,VDD≤$BV_{DSS}$, Starting $T_J$=25℃

4：Pulse Test：Pulse Width ≤300μs,Duty Cycle≤2%

5：Essentially independent of operating temperature

## 特征曲线 ELECTRICAL CHARACTERISTICS (curves)

### On-Region Characteristics

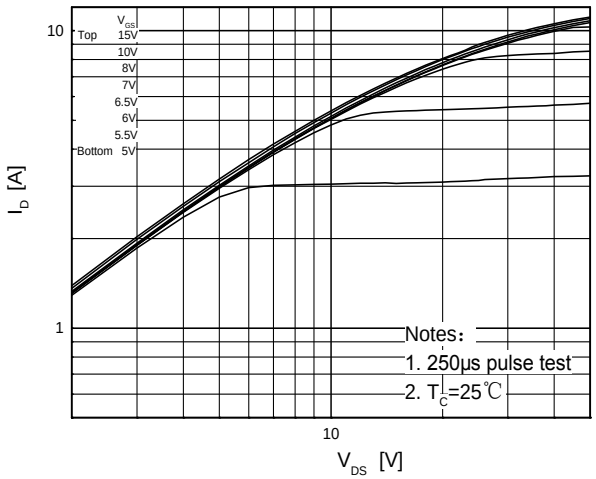


### Transfer Characteristics

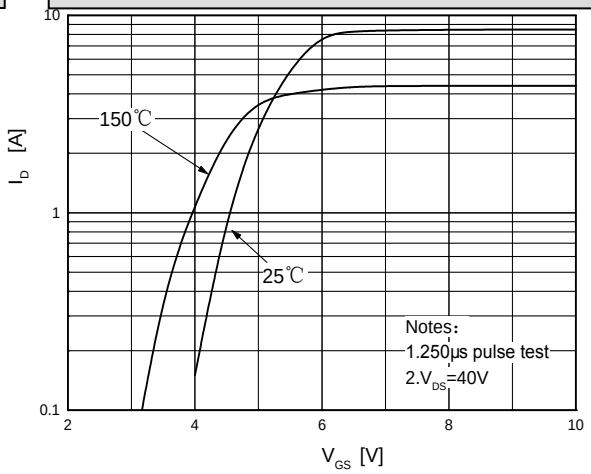


### On-Resistance Variation vs. Drain Current and Gate Voltage

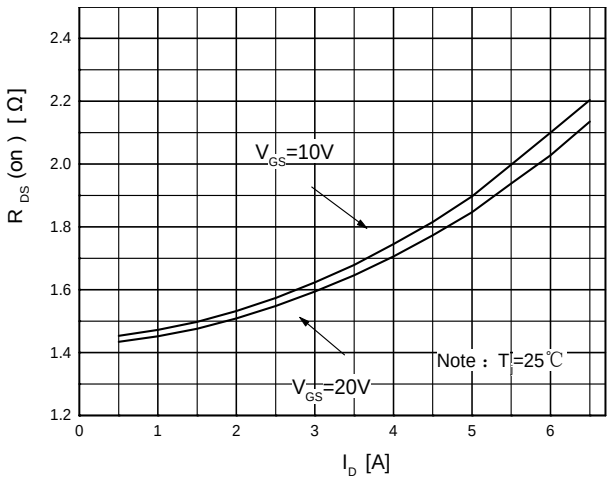


### Body Diode Forward Voltage Variation vs. Source Current and Temperature

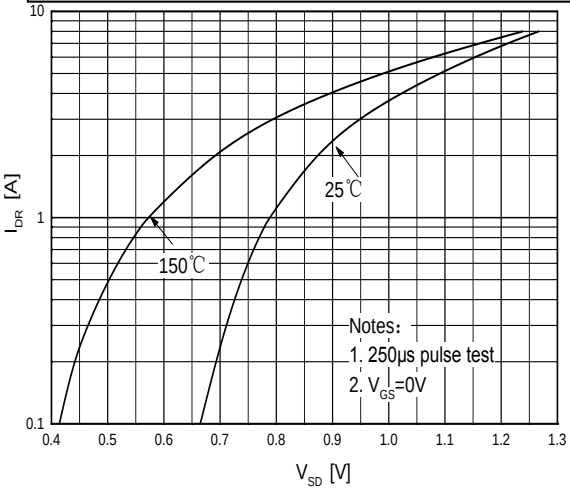


### Capacitance Characteristics

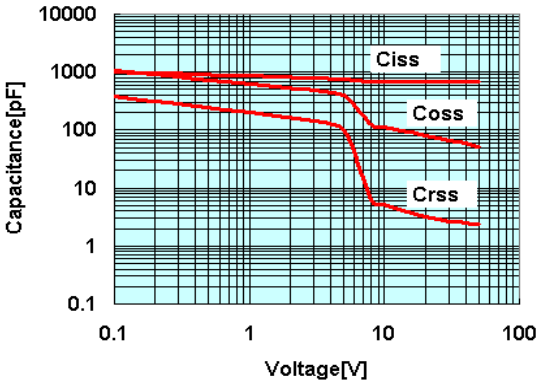


### Gate Charge Characteristics

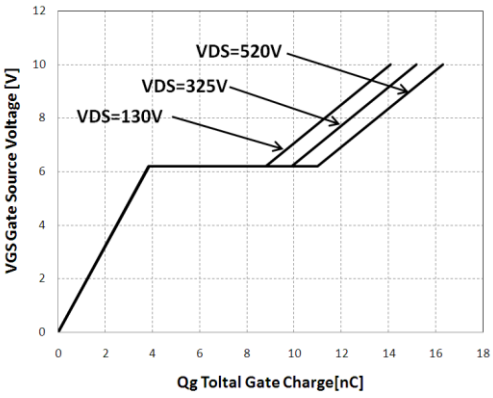

## 特征曲线 ELECTRICAL CHARACTERISTICS (curves)

### Breakdown Voltage Variation vs. Temperature

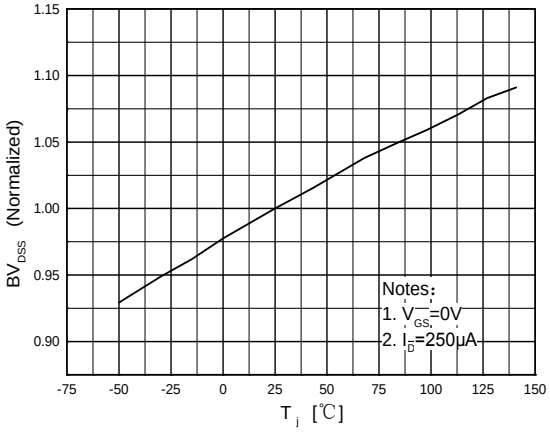


### On-Resistance Variation vs. Temperature

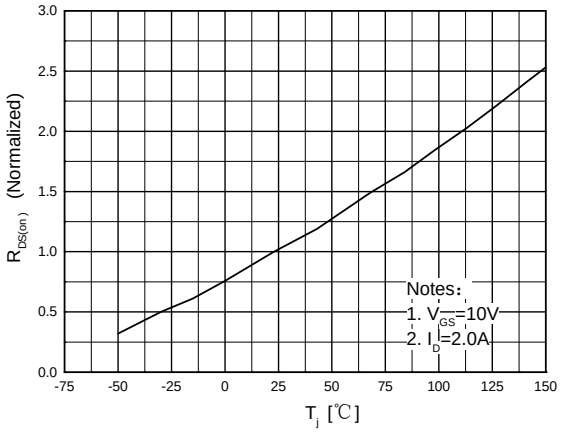


### Maximum Safe Operating Area For JCS4N65(V/R/C/B/S)B

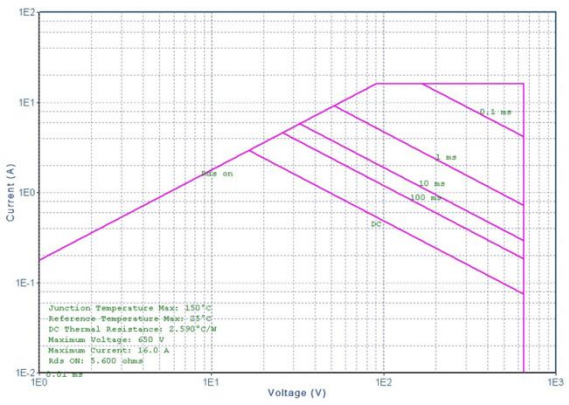


### Maximum Safe Operating Area For JCS4N65FB(TO-220MF)

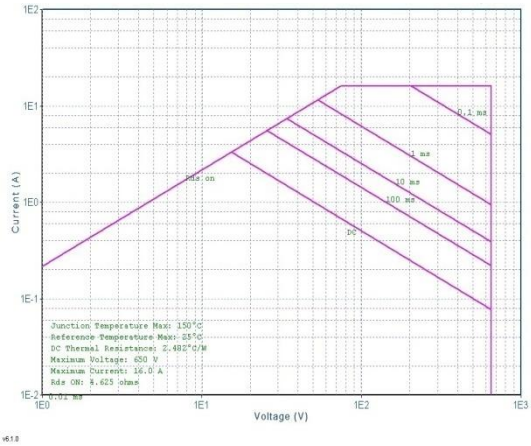


### Maximum Safe Operating Area For JCS4N65FB(TO-220MF-K2)




### Maximum Drain Current vs. Case Temperature

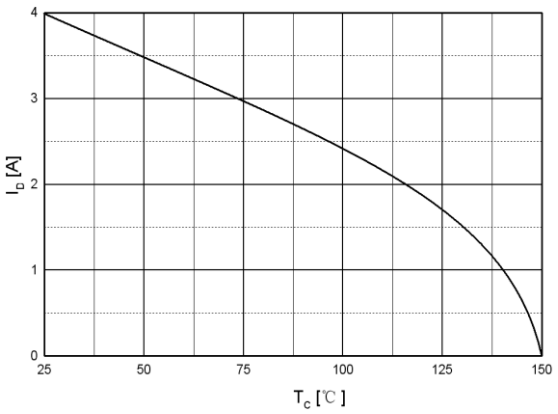

## Gate Threshold Voltage vs. Temperature

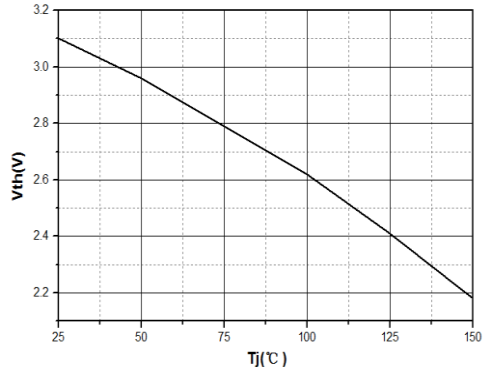


## Power Dissipation Variation vs. Temperature

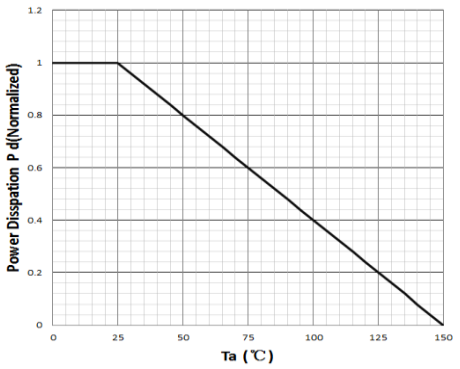


## Avalanche Energy & Inductor vs. Temperature

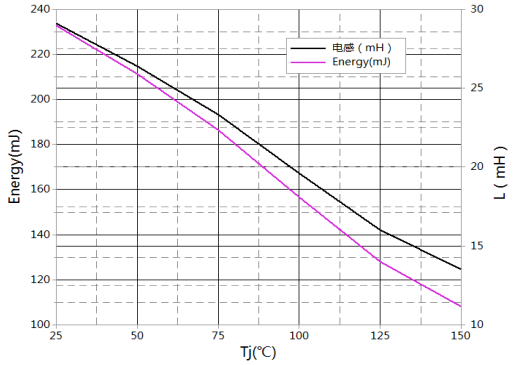

## 特征曲线 ELECTRICAL CHARACTERISTICS (curves)

### Transient Thermal Response Curve For JCS4N65(V/R)B

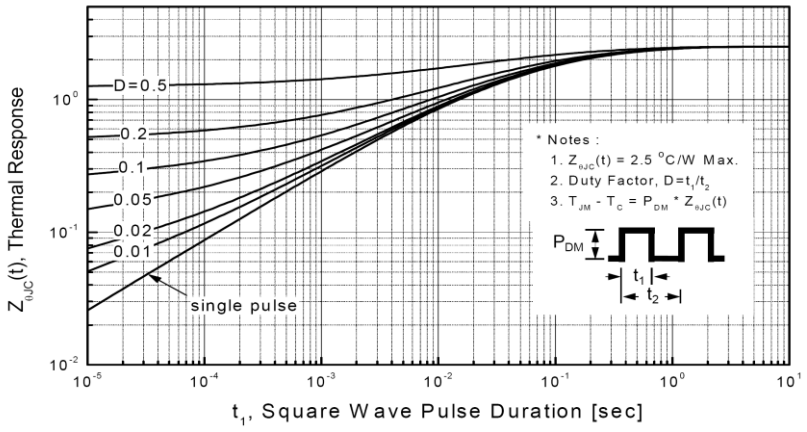


### Transient Thermal Response Curve For JCS4N65CB/BB/SB

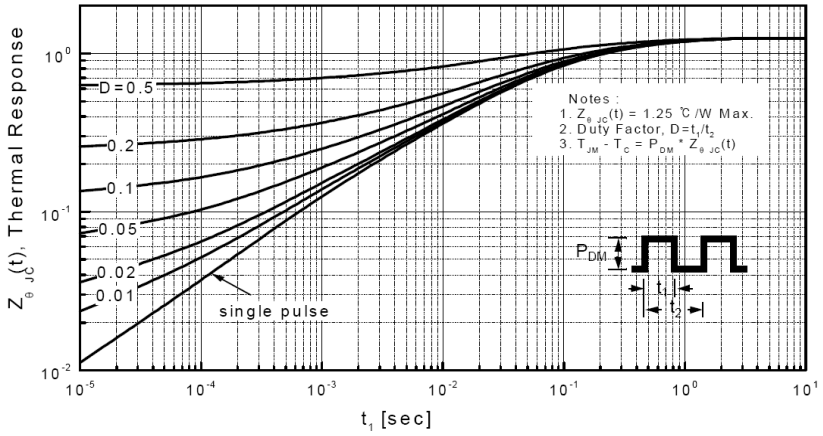


### Transient Thermal Response Curve For JCS4N65FB(TO-220MF)

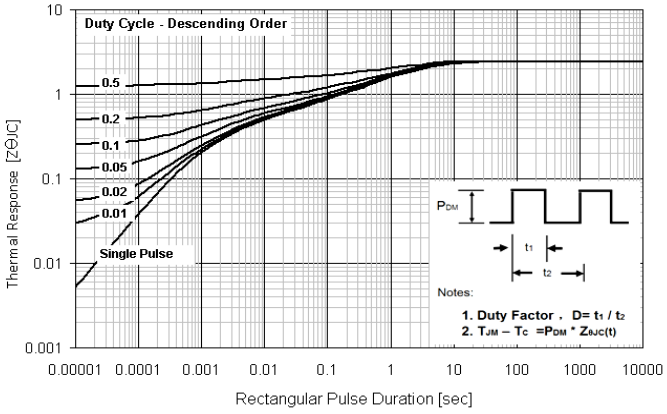

**Transient Thermal Response Curve**
**For JCS4N65FB(TO-220MF-K2)**

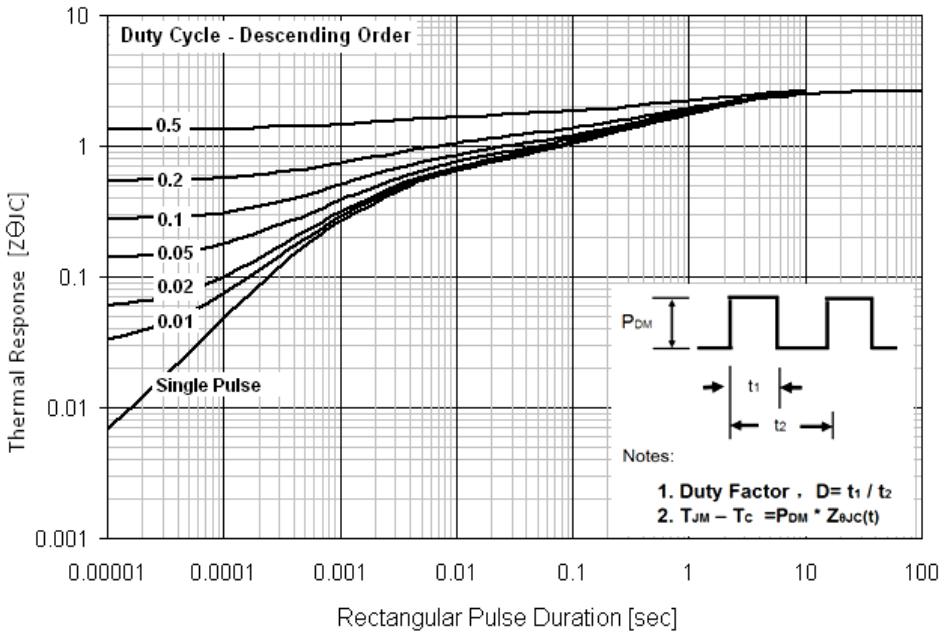

## 外形尺寸 PACKAGE MECHANICAL DATA

**IPAK**

**单位 Unit：mm**

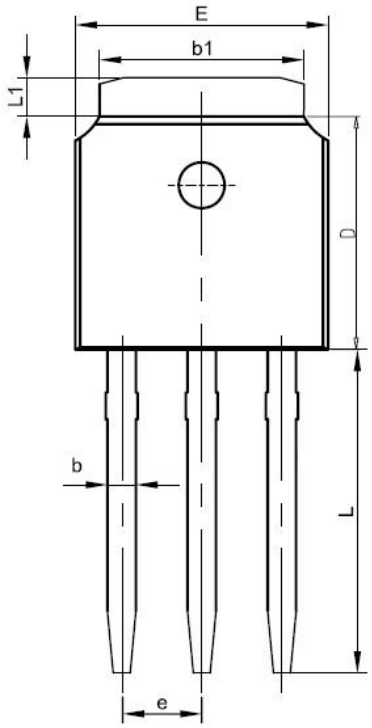


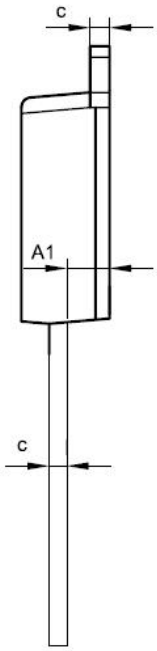


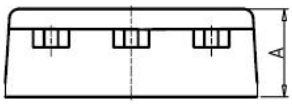


| SYMBOL | MM | |
|---|---|---|
| | MIN | MAX |
| A | 2.1 | 2.5 |
| A1 | 0.87 | 1.27 |
| b | 0.63 | 0.93 |
| b1 | 5.13 | 5.53 |
| c | 0.40 | 0.60 |
| D | 5.80 | 6.40 |
| E | 6.30 | 6.90 |
| L | 9.10 | 9.70 |
| e | 2.286BSC | |
| L1 | 0.82 | 1.22 |

## 外形尺寸 PACKAGE MECHANICAL DATA

**DPAK**

**单位 Unit：mm**

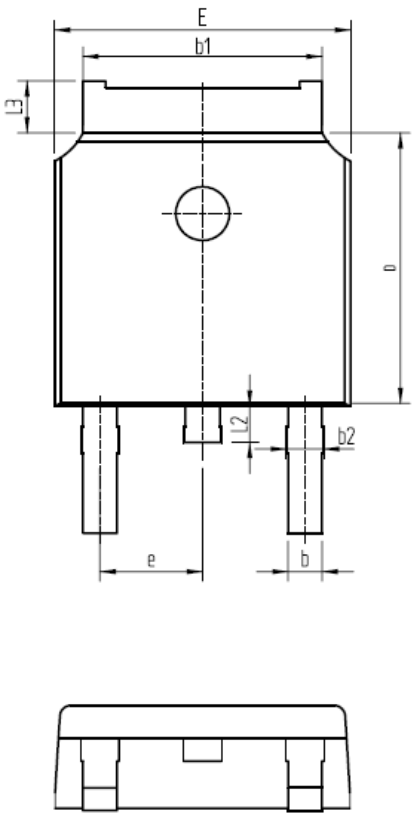


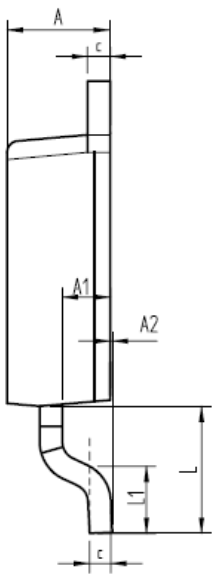


| SYMBOL | mm | |
|---|---|---|
| | MIN | MAX |
| A | 2.16 | 2.41 |
| A1 | 0.97 | 1.17 |
| A2 | 0.00 | 0.15 |
| b | 0.63 | 0.93 |
| b1 | 5.13 | 5.53 |
| b2 | 0.66 | 0.96 |
| c | 0.40 | 0.60 |
| D | 5.80 | 6.40 |
| E | 6.30 | 6.90 |
| e | 2.286BSC | |
| L | 2.50 | 3.30 |
| L1 | 1.20 | 1.80 |
| L2 | 0.60 | 1.00 |
| L3 | 0.85 | 1.30 |



## 编带 REEL

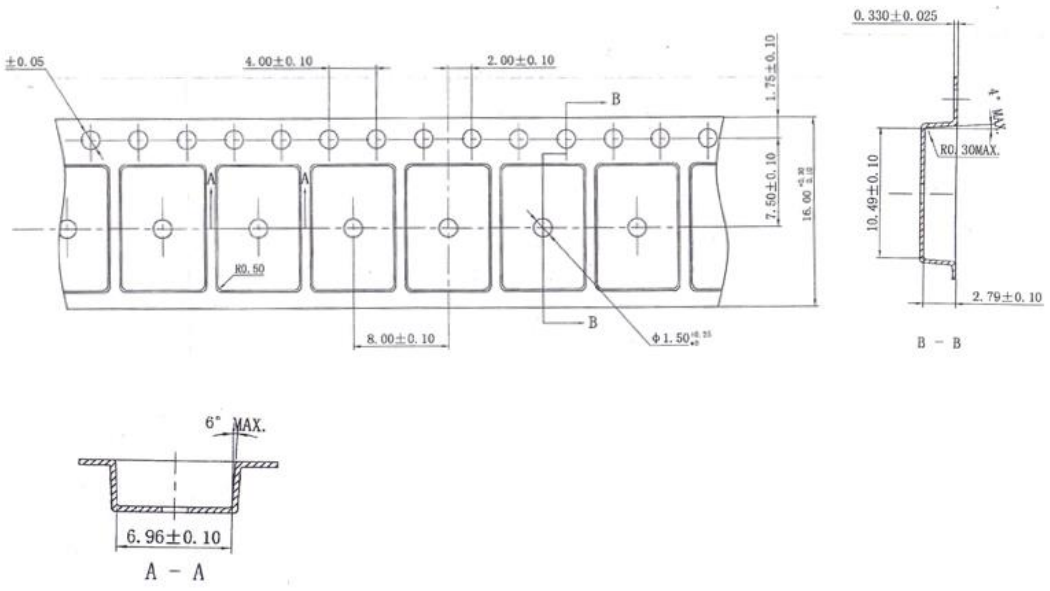

外形尺寸 **PACKAGE MECHANICAL DATA**

**TO-220C**

**单位 Unit：mm**

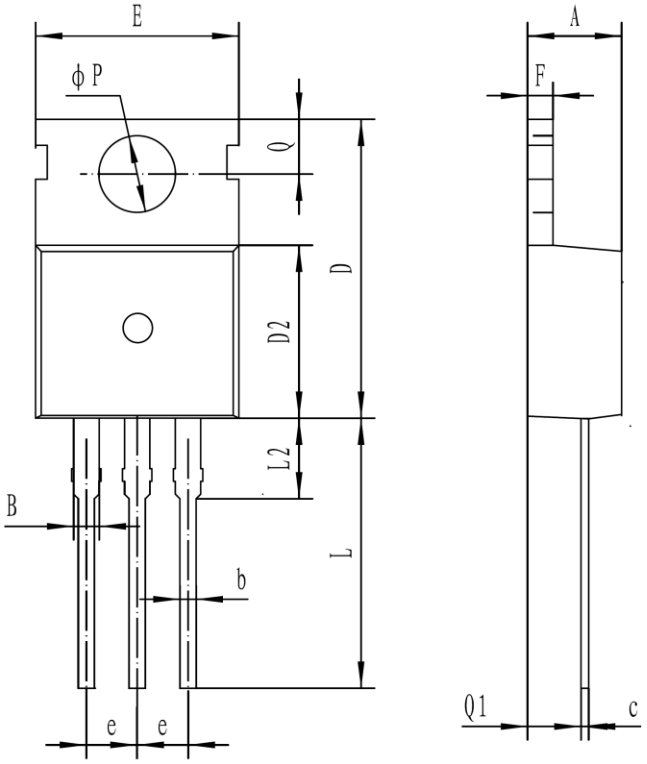


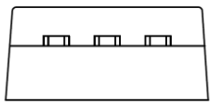

| 符号 symbol | MIN | MAX |
|---|---|---|
| A | 4.30 | 4.70 |
| B | 1.10 | 1.40 |
| b | 0.70 | 0.95 |
| c | 0.40 | 0.65 |
| D | 15.20 | 16.20 |
| D2 | 9.00 | 9.40 |
| E | 9.70 | 10.10 |
| e | 2.39 | 2.69 |
| F | 1.25 | 1.40 |
| L | 12.60 | 13.60 |
| L2 | 2.80 | 3.20 |
| Q | 2.60 | 3.00 |
| Q1 | 2.20 | 2.60 |
| P | 3.50 | 3.80 |

外形尺寸 **PACKAGE MECHANICAL DATA**

**TO-220MF**

**单位 Unit：mm**

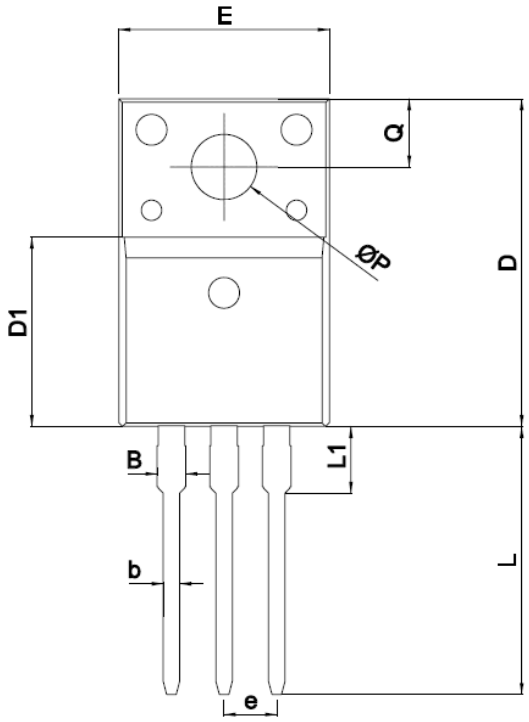


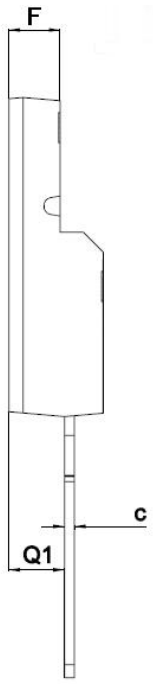


| SYMBOL | mm | |
|---|---|---|
| | MIN | MAX |
| A | 4.5 | 4.9 |
| B | | 1.47 |
| b | 0.7 | 0.9 |
| c | 0.45 | 0.60 |
| D | 15.67 | 16.07 |
| D1 | 9.04 | 9.20 |
| e | 2.54TYPE | |
| E | 9.96 | 10.36 |
| F | 2.34 | 2.74 |
| L | 12.58 | 13.38 |
| L1 | 3.13 | 3.33 |
| Q | 3.2 | 3.4 |
| Q1 | 2.56 | 2.96 |
| ΦP | 3.08 | 3.28 |

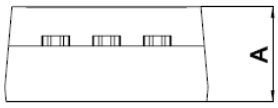

外形尺寸 **PACKAGE MECHANICAL DATA**

**TO-220MF-K2**

**单位 Unit：mm**

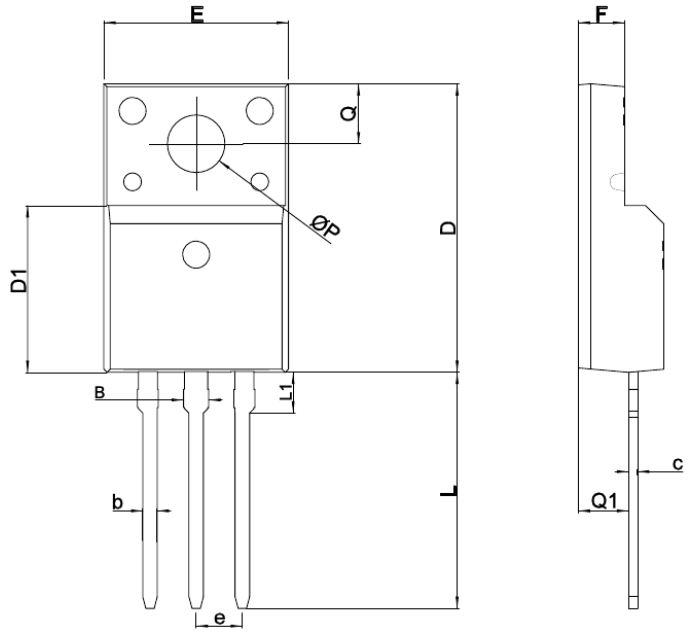





| SYMBOL | mm | |
|---|---|---|
| | MIN | MAX |
| A | 4.5 | 4.9 |
| B | | 1.27 |
| b | 0.59 | 0.79 |
| c | 0.45 | 0.60 |
| D | 15.67 | 16.07 |
| D1 | 8.97 | 9.37 |
| e | 2.54TYPE | |
| E | 9.96 | 10.36 |
| F | 2.34 | 2.74 |
| L | 12.65 | 13.35 |
| L1 | 1.80 | 2.20 |
| Q | 3.2 | 3.4 |
| Q1 | 2.56 | 2.96 |
| ΦP | 3.08 | 3.28 |

外形尺寸 **PACKAGE MECHANICAL DATA**

**TO-262**

**单位 Unit：mm**

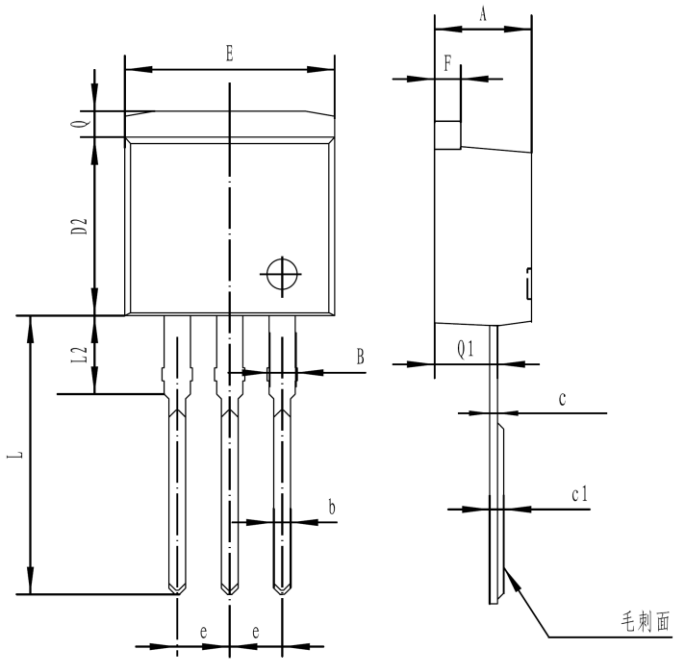


| 符号 symbol | MIN | MAX |
|---|---|---|
| A | 4.40 | 4.90 |
| B | 1.10 | 1.40 |
| b | 0.70 | 0.95 |
| c | 0.30 | 0.60 |
| c1 | 0.33 | 0.63 |
| D2 | 8.20 | 9.20 |
| E | 9.60 | 10.50 |
| e | 2.39 | 2.69 |
| F | 1.20 | 1.35 |
| L | 13.11 | 14.61 |
| L2 | 3.55 | 4.05 |
| Q | 1.10 | 1.40 |
| Q1 | 2.65 | 2.85 |

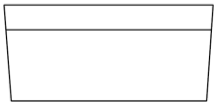

## 外形尺寸 PACKAGE MECHANICAL DATA

**TO-263** **单位 Unit：mm**

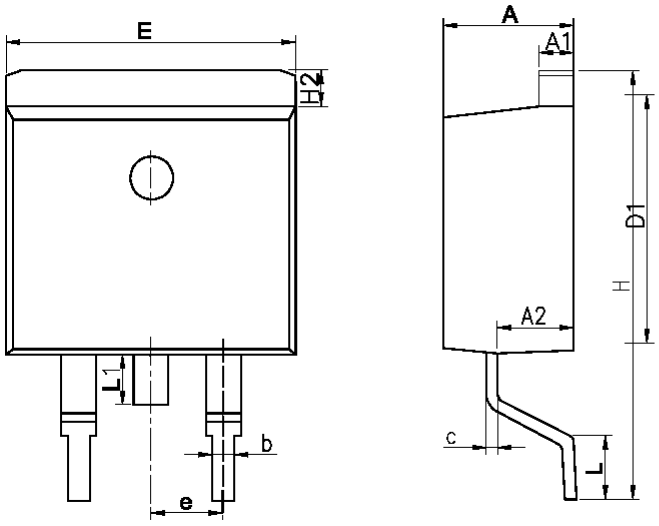


| SYMBOL | MM | |
|---|---|---|
| | MIN | MAX |
| A | 4.30 | 4.80 |
| A1 | 1.12 | 1.42 |
| A2 | 2.54 | 2.84 |
| b | 0.67 | 1.00 |
| c | 0.29 | 0.52 |
| D1 | 8.40 | 9.00 |
| E | 9.80 | 10.46 |
| e | 2.54BSC | |
| H | 14.00 | 16.00 |
| H2 | 1.12 | 1.45 |
| L | 1.50 | 3.10 |
| L1 | 1.45 | 1.70 |

编带 REEL

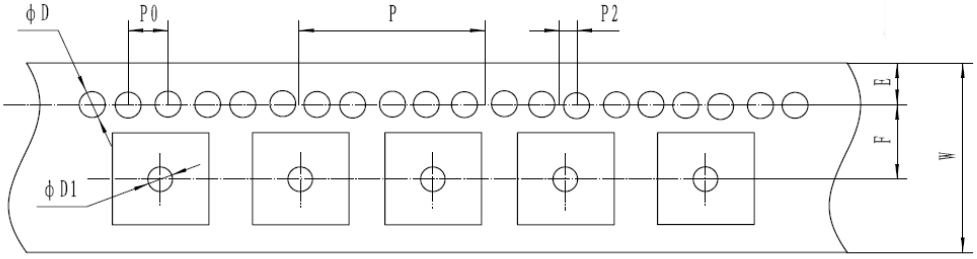


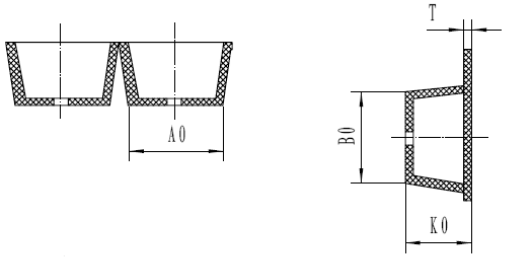


| 产品尺寸规格 (UNIT:mm) | | | | | |
|---|---|---|---|---|---|
| 规格 | W | A0 | E | F | D |
| 尺寸 | 24 ±0.3 | 10.9±0.1 | 1.75±0.1 | 11.5±0.1 | 1.5 +0.1/-0 |
| 规格 | D1 | P0 | P2 | P | T |
| 尺寸 | 1.5 +0.1/-0 | 4±0.1 | 2±0.1 | 16±0.1 | 0.35±0.05 |
| 规格 | K0 | B0 | | | |
| 尺寸 | 4.9±0.1 | 16.0±0.1 | | | |

## 外形尺寸 PACKAGE MECHANICAL DATA

**IPAK S1**

**单位 Unit：mm**

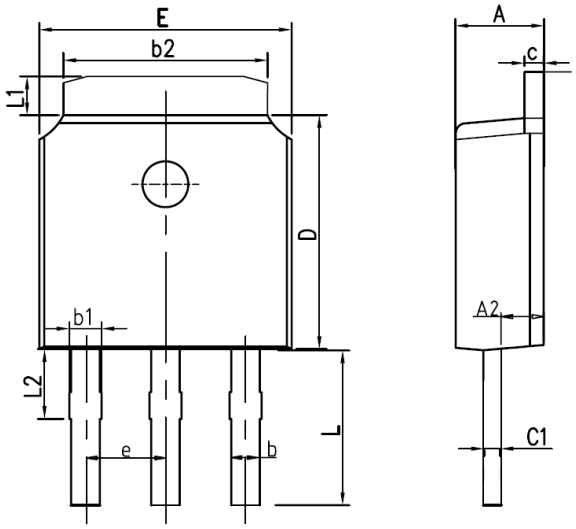


| SYMBOL | MM | |
|---|---|---|
| | MIN | MAX |
| A | 2.15 | 2.45 |
| A2 | 0.92 | 1.22 |
| b | 0.68 | 0.88 |
| b1 | 0.61 | 0.95 |
| b2 | 5.18 | 5.48 |
| c | 0.43 | 0.63 |
| c1 | 0.41 | 0.61 |
| D | 5.95 | 6.25 |
| E | 6.45 | 6.75 |
| e | 2.286BSC | |
| L | 3.35 | 3.65 |
| L1 | 0.80 | 1.25 |
| L2 | 0.90 | 1.20 |

## 注意事项

1.吉林华微电子股份有限公司的产品销售分为直销和销售代理，无论哪种方式，订货时请与公司核实。

2.购买时请认清公司商标，如有疑问请与公司本部联系。

3.在电路设计时请不要超过器件的绝对最大额定值，否则会影响整机的可靠性。

4.本说明书如有版本变更不另外告知

## NOTE

1. Jilin Sino-microelectronics co., Ltd sales its product either through direct sales or sales agent , thus, for customers, when ordering , please check with our company.
2. We strongly recommend customers check carefully on the trademark when buying our product, if there is any question, please don't be hesitate to contact us.
3. Please do not exceed the absolute maximum ratings of the device when circuit designing.
4. Jilin Sino-microelectronics co., Ltd reserves the right to make changes in this specification sheet and is subject to change without prior notice.

## 联系方式

**吉林华微电子股份有限公司**

公司地址：吉林省吉林市深圳街 99 号

邮编：132013
总机：86-432-64678411
传真：86-432-64665812
网址：www.hwdz.com.cn

**市场营销部**
地址：吉林省吉林市深圳街 99 号

邮编：132013
电话： 86-432-64675588
64675688
64678411
传真: 86-432-64671533

## CONTACT

**JILIN SINO-MICROELECTRONICS CO., LTD.**

ADD: No.99 Shenzhen Street, Jilin City, Jilin Province, China.
Post Code: 132013
Tel： 86-432-64678411
Fax：86-432-64665812
Web Site：www.hwdz.com.cn

**MARKET DEPARTMENT**
ADD: No.99 Shenzhen Street, Jilin City, Jilin Province, China.
Post Code: 132013
Tel: 86-432-64675588
64675688
64678411
Fax: 86-432-64671533

ENTEGRECİ

Bu belge www.entegreci.com üzerinden sunulmaktadır.

# Elektronik komponent tedarikinde Entegreci

Entegreci, Eskişehir merkezli, Türkiye geneline satış yapan bir elektronik komponent mağazasıdır. Entegreler (IC), mikrodenetleyiciler, transistörler, diyotlar, pasif elemanlar, konnektörler, modüller ve geliştirme kartları tek adetten seri üretim adetlerine kadar satılır. Ürün sayfalarında güncel stok durumunu, fiyatı ve datasheet bağlantısını bulabilirsiniz.

### Parça koduyla arama

Üretici parça numarasını yazın; stok ve fiyatı hemen görün.

**www.entegreci.com**

### Ürün kategorileri

Entegreden kapasitöre tüm elektronik komponent kategorileri.

**Kategorilere göz atın**

### Üreticiler

Aradığınız üreticinin ürünlerini tek sayfada inceleyin.

**Üreticileri görün**

### Toplu alım ve teklif

Listede olmayan ya da yüksek adetli parçalar için teklif isteyin.

**Teklif isteyin**

**www.entegreci.com** | **destek@entegreci.com** | **0850 305 90 34**

Entegreci is an online electronic components store based in Türkiye. Search by manufacturer part number to see stock, prices and datasheets for integrated circuits, microcontrollers, transistors, passive components and connectors, or request a quote for parts that are not listed.

Bu sayfa Entegreci tarafından eklenmiştir. Belgenin önceki sayfaları asıl yayıncısına aittir ve içeriği değiştirilmemiştir; en güncel sürüm için belgenin yayıncısına başvurun.