JCS12N60T

主要参数 MAIN CHARACTERISTICS

I_D	12.0A
V_{DSS}	600 V
Rdson-max （@Vgs=10V）	0.65Ω
Qg	39 nC

封装 Package

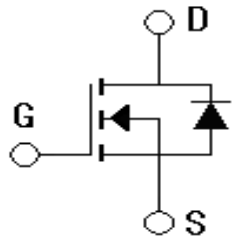

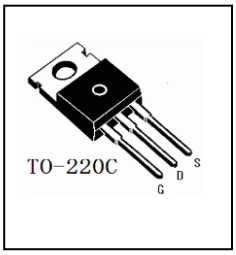

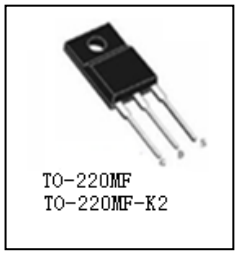

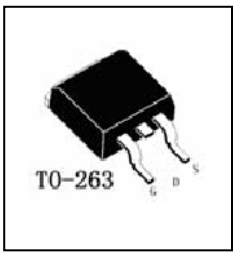

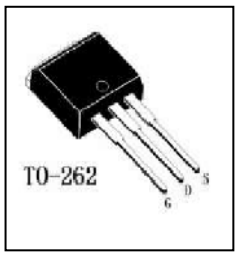

用途

- 高频开关电源
- 电子镇流器
- LED 电源

APPLICATIONS

- High efficiency switch mode power supplies
- Electronic lamp ballasts based on half bridge
- LED power supplies

产品特性

- 低栅极电荷
- 低 C_{rss} (典型值 23pF)
- 开关速度快
- 产品全部经过雪崩测试
- 高抗 dv/dt 能力
- RoHS 产品

FEATURES

- Low gate charge
- Low C_{rss} (typical 23pF)
- Fast switching
- 100% avalanche tested
- Improved dv/dt capability
- RoHS product

订货信息 ORDER MESSAGE

订 货 型 号 Order codes				印 记 Marking	封 装 Package
有卤-条管 Halogen-Tube	无卤-条管 Halogen-Free-Tube	有卤-编带 Halogen-Reel	无卤-编带 Halogen-Free-Reel		
JCS12N60CT-C-B	JCS12N60CT-C-BR	N/A	N/A	JCS12N60CT	TO-220C
JCS12N60FT-F-B	JCS12N60FT-F-BR	N/A	N/A	JCS12N60FT	TO-220MF
JCS12N60FT-F2-B	JCS12N60FT-F2-BR	N/A	N/A	JCS12N60FT	TO-220MF-K2
JCS12N60ST-S-B	JCS12N60ST-S-BR	JCS12N60ST-S-A	JCS12N60ST-S-AR	JCS12N60ST	TO-263
JCS12N60BT-B-B	JCS12N60BT-B-BR	N/A	N/A	JCS12N60BT	TO-262

绝对最大额定值 ABSOLUTE RATINGS (Tc=25℃)

项 目 Parameter	符 号 Symbol	数 值 Value		单位 Unit
		JCS12N60ST/CT/BT	JCS12N60FT	
最高漏极－源极直流电压 Drain-Source Voltage	V_{DSS}	600	600	V
连续漏极电流 Drain Current -continuous	I_D T=25℃	12	12*	A
	T=100℃	7.6	7.6*	A
最大脉冲漏极电流（注 1） Drain Current – pulse（note 1）	I_{DM}	48	48*	A
最高栅源电压 Gate-Source Voltage	V_{GSS}	±30		V
单脉冲雪崩能量（注 2） Single Pulsed Avalanche Energy（note 2）	E_{AS}	880		mJ
雪崩电流（注 1） Avalanche Current（note 1）	I_{AR}	12		A
重复雪崩能量（注 1） Repetitive Avalanche Current（note 1）	E_{AR}	17.8		mJ
二极管反向恢复最大电压变化速率（注 3） Peak Diode Recovery dv/dt（note 3）	dv/dt	4.5		V/ns
耗散功率 Power Dissipation	P_D T_C=25℃	250	51	W
	-Derate above 25℃	2.0	0.41	W/℃
最高结温及存储温度 Operating and Storage Temperature Range	T_J，T_{STG}	-55～+150		℃
引线最高焊接温度 Maximum Lead Temperature for Soldering Purposes	T_L	300		℃

*漏极电流由最高结温限制

*Drain current limited by maximum junction temperature

项　　目 Parameter	符　号 Symbol	测试条件 Tests conditions	最小 Min	典型 Typ	最大 Max	单位 Units
关态特性 Off –Characteristics						
漏－源击穿电压 Drain-Source Voltage	BV_{DSS}	I_D=250μA, V_{GS}=0V	600	-	-	V
击穿电压温度特性 Breakdown Voltage Temperature Coefficient	$\Delta BV_{DSS}/\Delta T_J$	I_D=250μA, referenced to 25℃	-	0.5	-	V/℃
零栅压下漏极漏电流 Zero Gate Voltage Drain Current	I_{DSS}	V_{DS}=600V,V_{GS}=0V, T_C=25℃	-	-	1	μA
		V_{DS}=480V, T_C=125℃	-	-	10	μA
正向栅极体漏电流 Gate-body leakage current, forward	I_{GSSF}	V_{DS}=0V, V_{GS} =30V	-	-	100	nA
反向栅极体漏电流 Gate-body leakage current, reverse	I_{GSSR}	V_{DS}=0V, V_{GS} =-30V	-	-	-100	nA
通态特性 On-Characteristics						
阈值电压 Gate Threshold Voltage	$V_{GS(th)}$	V_{DS} = V_{GS} , I_D=250μA	3.0	-	5.0	V
静态导通电阻 Static Drain-Source On-Resistance	$R_{DS(ON)}$	V_{GS} =10V , I_D=6A 25℃	0.3	0.56	0.65	Ω
		V_{GS} =10V , I_D=6A 100℃	0.5	0.98	1.35	Ω
		V_{GS} =10V , I_D=6A 150℃	0.8	1.46	1.95	Ω
正向跨导 Forward Transconductance	g_{fs}	V_{DS} = 40V, I_D=6A（note 4）	-	13	-	S
动态特性 Dynamic Characteristics						
栅极电阻 Gate resistance	Rg	F=1.0MHZ open drain	0.3	-	3.5	Ω
输入电容 Input capacitance	C_{iss}	V_{DS}=25V, V_{GS} =0V, f=1.0MH_Z	800	1790	2410	pF
输出电容 Output capacitance	C_{oss}		100	175	229	pF
反向传输电容 Reverse transfer capacitance	C_{rss}		12	23	31	pF

电特性 ELECTRICAL CHARACTERISTICS

开关特性 Switching Characteristics						
延迟时间 Turn-On delay time	t_d(on)	V_{DD}=300V,I_D=12A,R_G=25Ω （note 4，5）	25	78	102	ns
上升时间 Turn-On rise time	t_r		45	133	175	ns
延迟时间 Turn-Off delay time	t_d(off)		80	233	305	ns
下降时间 Turn-Off Fall time	t_f		35	104	160	ns
栅极电荷总量 Total Gate Charge	Q_g	V_{DS} =480V , I_D=12A V_{GS} =10V （note 4，5）	13	39	52	nC
栅－源电荷 Gate-Source charge	Q_{gs}		2.5	8.5	20	nC
栅－漏电荷 Gate-Drain charge	Q_{gd}		7	20	55	nC
漏－源二极管特性及最大额定值 **Drain-Source Diode Characteristics and Maximum Ratings**						
正向最大连续电流 Maximum Continuous Drain -Source Diode Forward Current	I_S		-	-	12	A
正向最大脉冲电流 Maximum Pulsed Drain-Source Diode Forward Current	I_{SM}		-	-	48	A
正向压降 Drain-Source Diode Forward Voltage	V_{SD}	V_{GS}=0V, I_S=12A	-	-	1.39	V
反向恢复时间 Reverse recovery time	t_{rr}	V_{GS}=0V, I_S=12A dI_F/dt=100A/μs (note 4)	200	418	1000	ns
反向恢复电荷 Reverse recovery charge	Q_{rr}		1.5	4.85	12	μC

热特性 THERMAL CHARACTERISTIC

项 目 Parameter	符 号 Symbol	最大 Max		单 位 Unit
		JCS12N60ST/CT/BT	JCS12N60FT	
结到管壳的热阻 Thermal Resistance, Junction to Case	$R_{th(j-c)}$	0.5	2.45	℃/W
结到环境的热阻 Thermal Resistance, Junction to Ambient	$R_{th(j-A)}$	62.5	62.5	℃/W

注释：

1：脉冲宽度由最高结温限制

2：L=11.2mH, I_{AS}=12A, V_{DD}=50V, R_G=25 Ω,起始结温 T_J=25℃

3：I_{SD} ≤12A,di/dt ≤300A/μs,VDD≤BV_{DSS},起始结温 T_J=25℃

4：脉冲测试：脉冲宽度≤300μs,占空比≤2%

5：基本与工作温度无关

Notes:

1：Pulse width limited by maximum junction temperature

2：L=11.2mH, I_{AS}=12A, V_{DD}=50V, R_G=25 Ω,Starting T_J=25℃

3：I_{SD} ≤12A,di/dt ≤300A/μs,VDD≤BV_{DSS}, Starting T_J=25℃

4：Pulse Test：Pulse Width ≤300μs,Duty Cycle≤2%

5：Essentially independent of operating temperature

特征曲线 ELECTRICAL CHARACTERISTICS (curves)

On-Region Characteristics

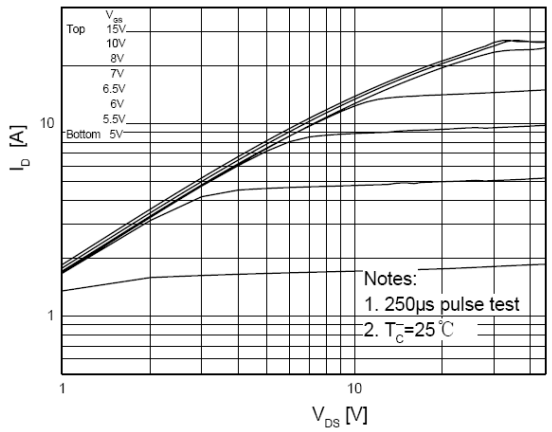

Transfer Characteristics

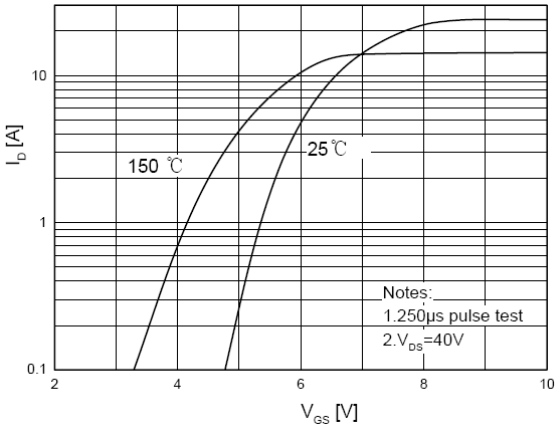

On-Resistance Variation vs. Drain Current and Gate Voltage

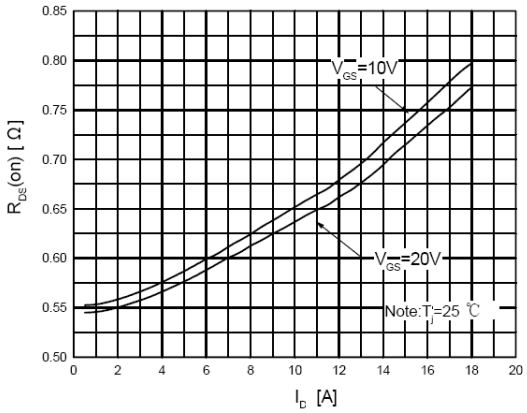

Body Diode Forward Voltage Variation vs. Source Current and Temperature

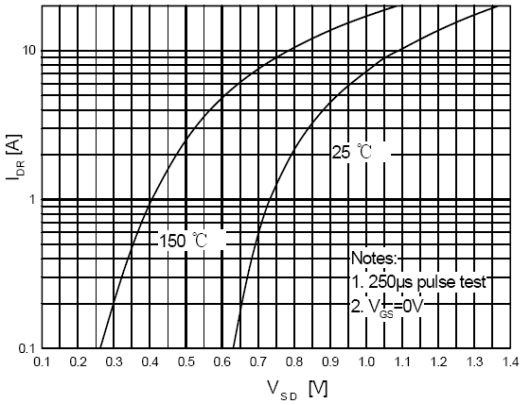

Capacitance Characteristics

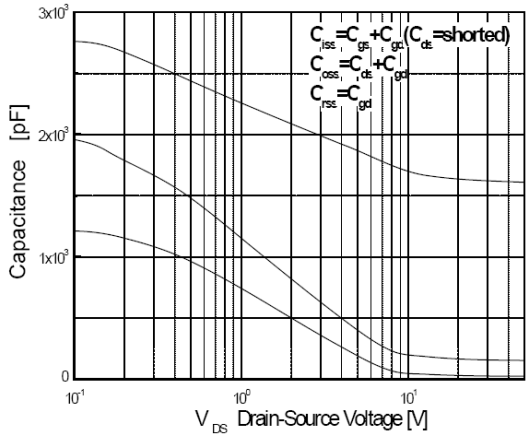

Gate Charge Characteristics

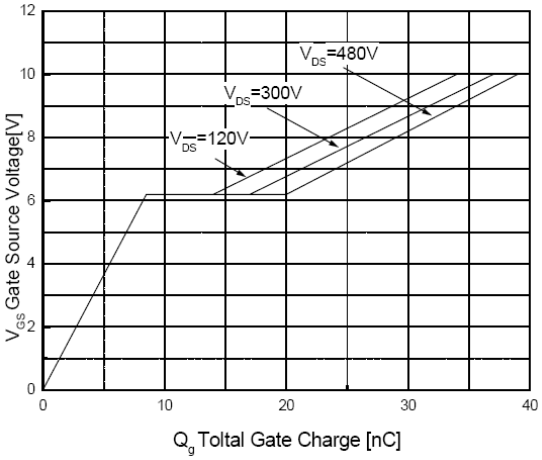

特征曲线 ELECTRICAL CHARACTERISTICS (curves)

Breakdown Voltage Variation vs. Temperature

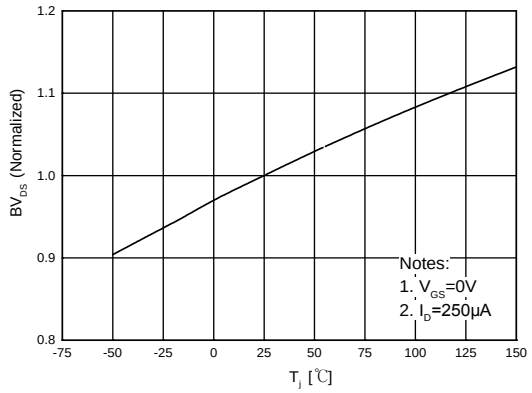

On-Resistance Variation vs. Temperature

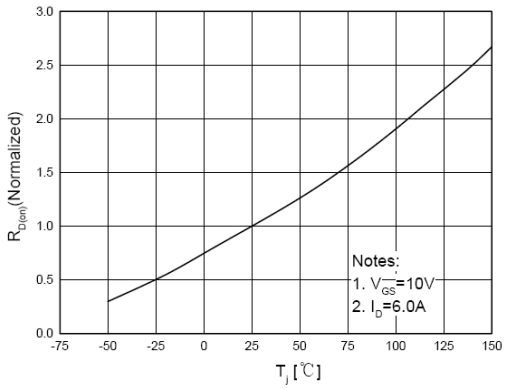

Maximum Safe Operating Area For JCS12N60ST/CT/ BT

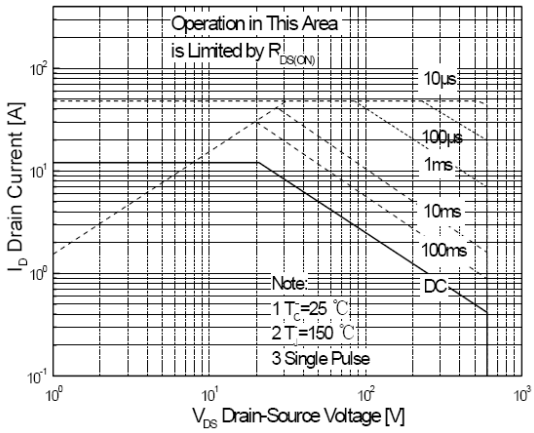

Maximum Safe Operating Area For JCS12N60FT

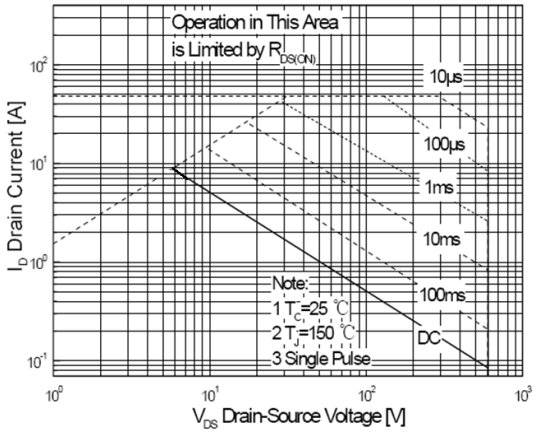

Maximum Drain Current vs. Case Temperature

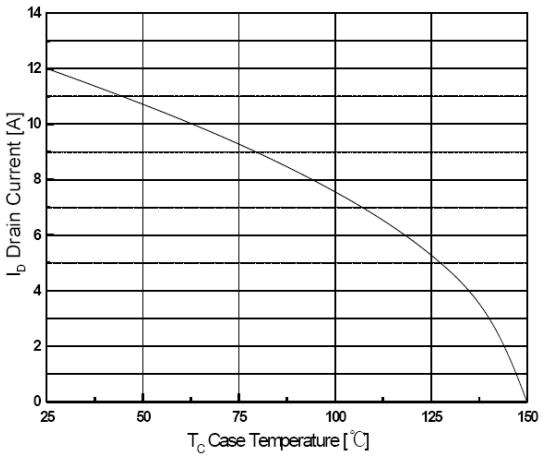

特征曲线 ELECTRICAL CHARACTERISTICS (curves)

Transient Thermal Response Curve For JCS12N60ST/CT/BT

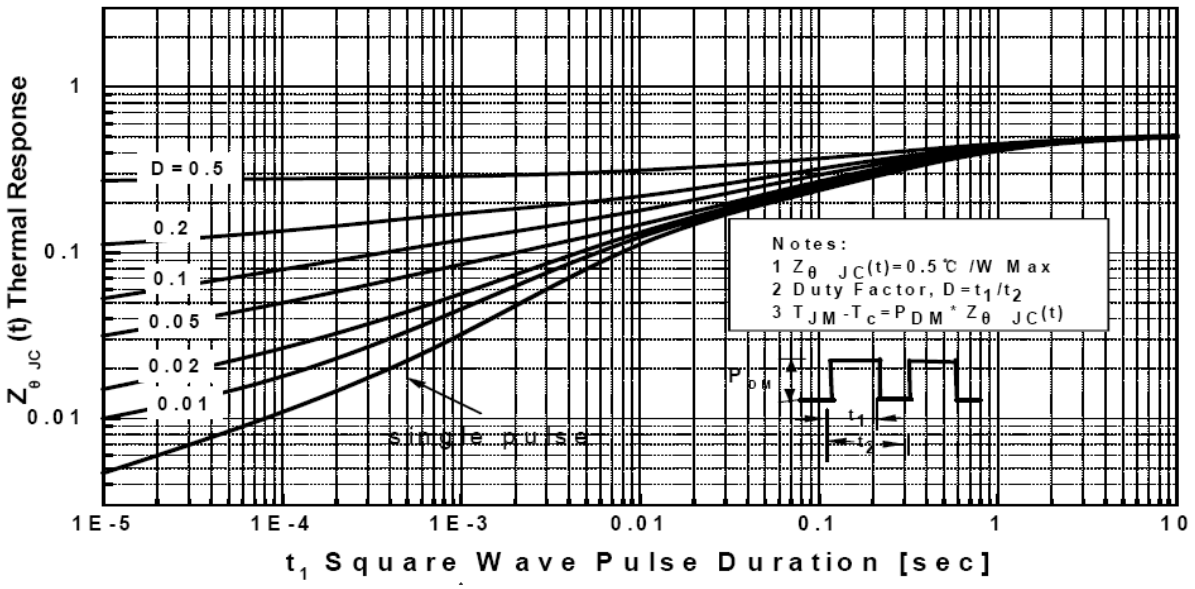

Transient Thermal Response Curve For JCS12N60FT

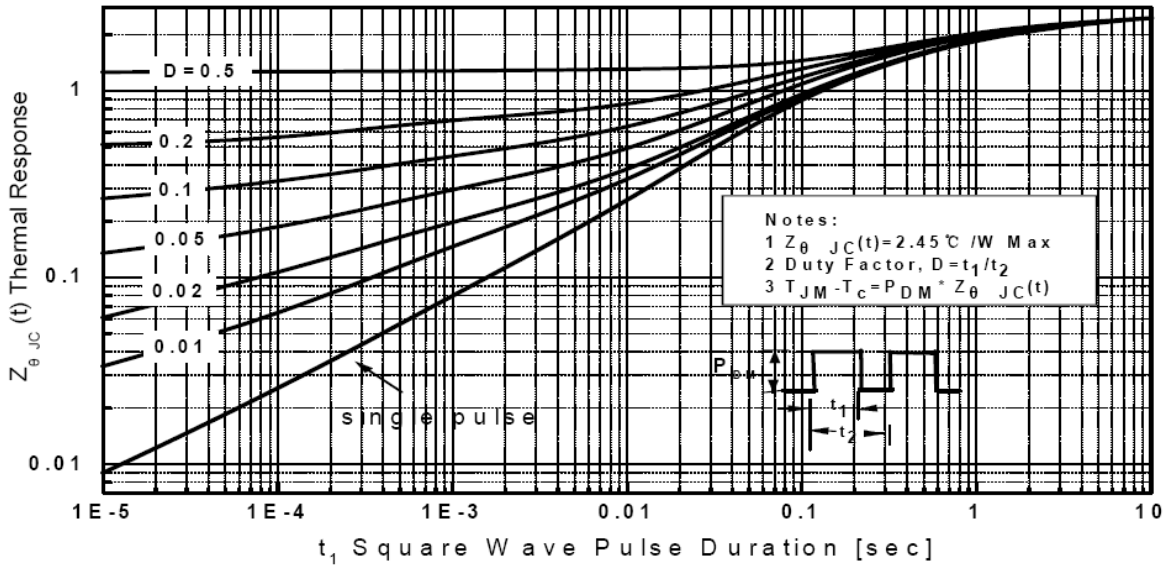

外形尺寸 PACKAGE MECHANICAL DATA

TO-263

单位 Unit：mm

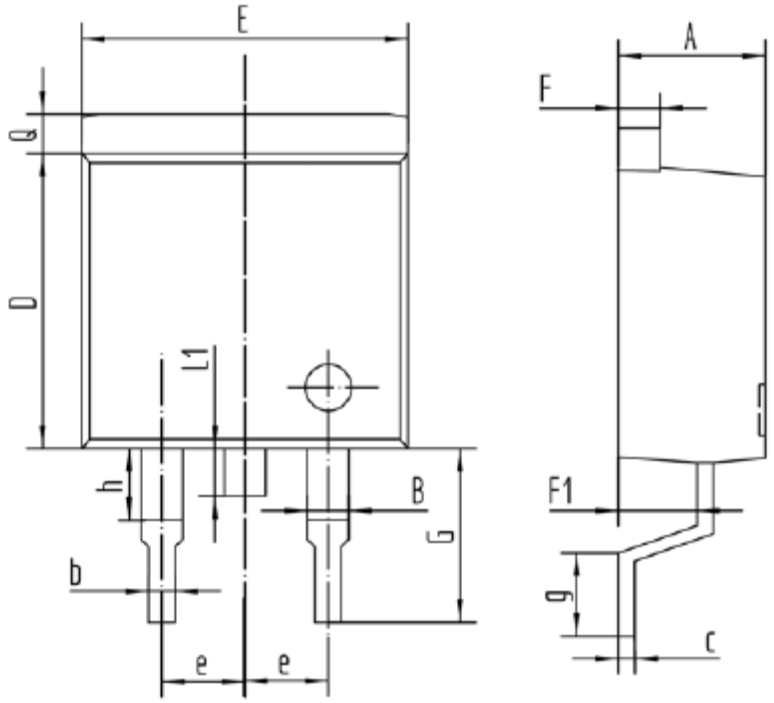

符号 symbol	MIN	MAX
A	4.50	4.90
B	1.20	1.40
D	8.40	8.80
E	9.50	10.50
F	1.20	1.40
F1	2.50	2.90
G	4.50	5.50
L1	1.30	1.60
Q	1.20	1.50
b	0.75	0.95
c	0.35	0.50
e	2.49	2.59
g	1.90	2.80
h	2.30	3.30

外形尺寸 PACKAGE MECHANICAL DATA

TO-220C

单位 Unit：mm

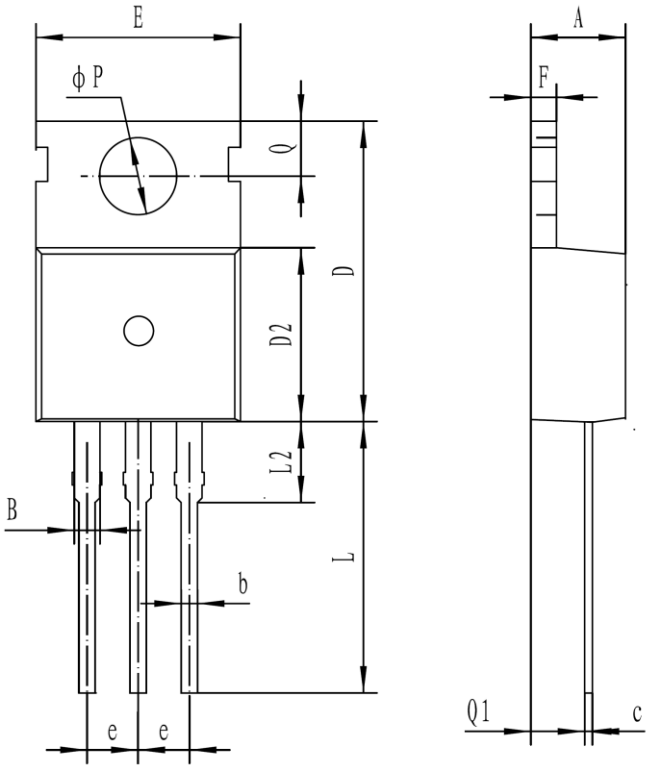

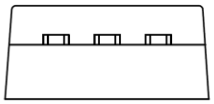

符号 symbol	MIN	MAX
A	4.30	4.70
B	1.22	1.47
b	0.70	0.95
c	0.40	0.65
D	15.20	16.20
D2	9.00	9.40
E	9.70	10.10
e	2.39	2.69
F	1.25	1.40
L	12.60	13.60
L2	2.80	3.20
Q	2.60	3.00
Q1	2.20	2.60
P	3.50	3.80

外形尺寸 **PACKAGE MECHANICAL DATA**

TO-220MF

单位 Unit：mm

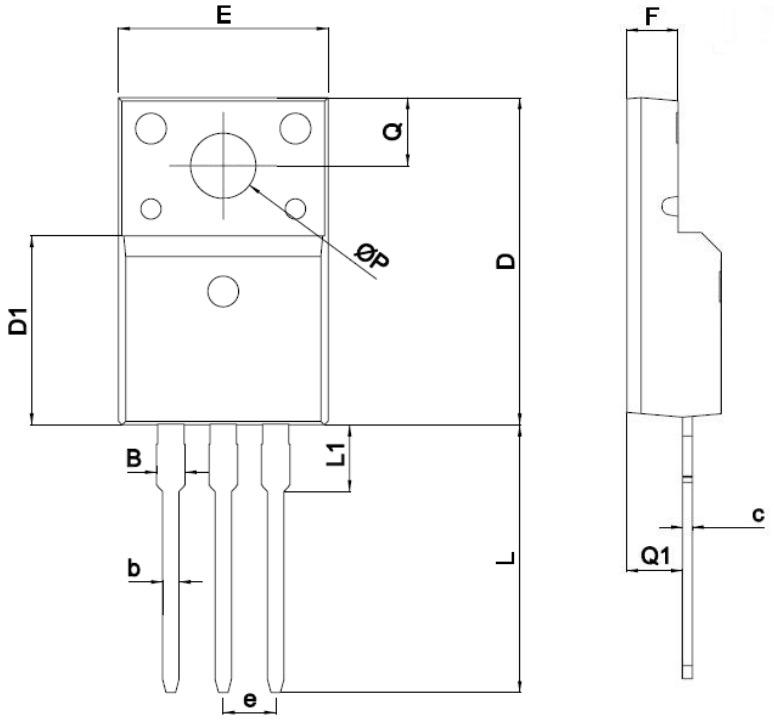

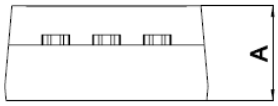

SYMBOL	mm	
	MIN	MAX
A	4.5	4.9
B		1.47
b	0.7	0.9
c	0.45	0.60
D	15.67	16.07
D1	9.04	9.20
e	2.54TYPE	
E	9.96	10.36
F	2.34	2.74
L	12.58	13.38
L1	3.13	3.33
Q	3.2	3.4
Q1	2.56	2.96
ΦP	3.08	3.28

外形尺寸 **PACKAGE MECHANICAL DATA**

TO-220MF-K2

单位 Unit：mm

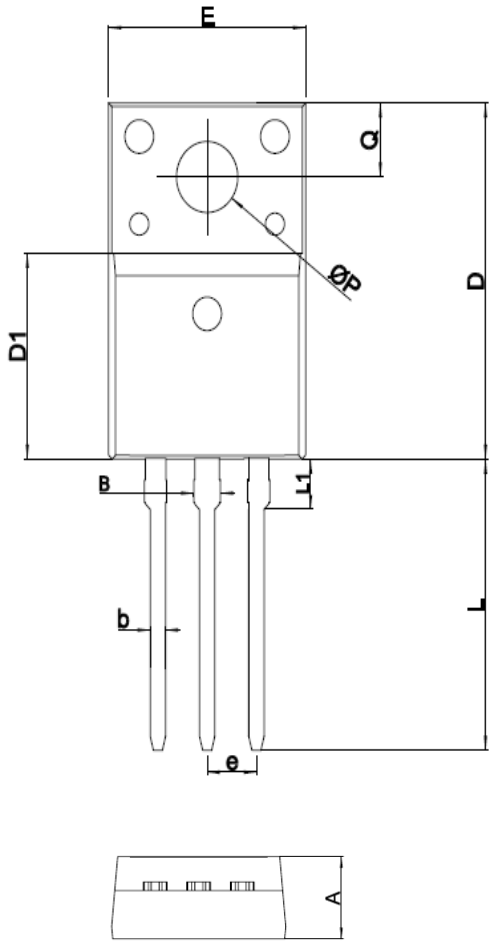

SYMBOL	mm	
	MIN	MAX
A	4.5	4.9
B		1.27
b	0.59	0.79
c	0.45	0.60
D	15.67	16.07
D1	8.97	9.37
e	2.54TYPE	
E	9.96	10.36
F	2.34	2.74
L	12.65	13.35
L1	1.80	2.20
Q	3.2	3.4
Q1	2.56	2.96
ΦP	3.08	3.28

外形尺寸 **PACKAGE MECHANICAL DATA**

TO-262

单位 Unit：mm

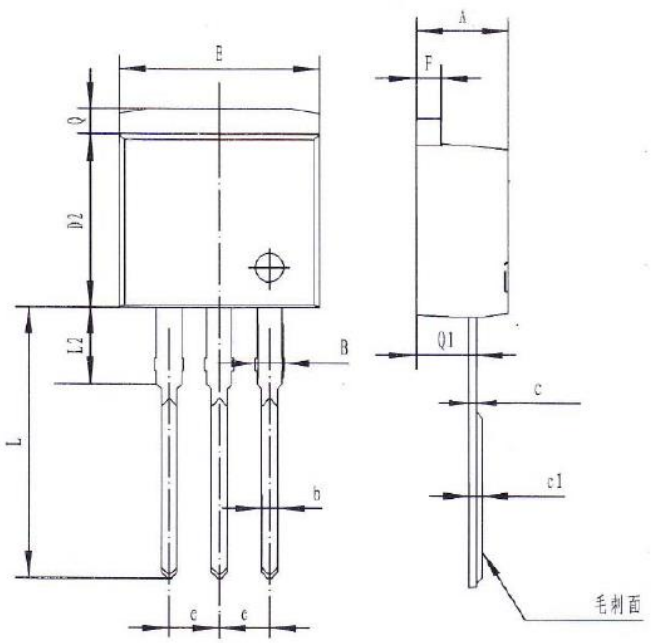

符号 symbol	MIN	MAX
A	4.40	4.90
B	1.10	1.40
b	0.70	0.95
c	0.30	0.60
c1	0.33	0.63
D2	8.20	9.20
E	9.60	10.50
e	2.39	2.69
F	1.20	1.35
L	13.11	14.61
L2	3.55	4.05
Q	1.10	1.40
Q1	2.65	2.85

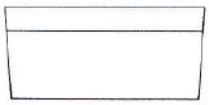

注意事项

1.吉林华微电子股份有限公司的产品销售分为直销和销售代理，无论哪种方式，订货时请与公司核实。

2.购买时请认清公司商标，如有疑问请与公司本部联系。

3.在电路设计时请不要超过器件的绝对最大额定值，否则会影响整机的可靠性。

4.本说明书如有版本变更不另外告知

NOTE

1. Jilin Sino-microelectronics co., Ltd sales its product either through direct sales or sales agent , thus, for customers, when ordering , please check with our company.
2. We strongly recommend customers check carefully on the trademark when buying our product, if there is any question, please don't be hesitate to contact us.
3. Please do not exceed the absolute maximum ratings of the device when circuit designing.
4. Jilin Sino-microelectronics co., Ltd reserves the right to make changes in this specification sheet and is subject to change without prior notice.

联系方式

吉林华微电子股份有限公司

公司地址：吉林省吉林市深圳街 99 号

邮编：132013
总机：86-432-64678411
传真：86-432-64665812
网址：www.hwdz.com.cn

市场营销部
地址：吉林省吉林市深圳街 99 号

邮编：132013
电话： 86-432-64675588
64675688
64678411-3098/3099
传真: 86-432-64671533

CONTACT

JILIN SINO-MICROELECTRONICS CO., LTD.

ADD: No.99 Shenzhen Street, Jilin City, Jilin Province, China.
Post Code: 132013
Tel： 86-432-64678411
Fax：86-432-64665812
Web Site：www.hwdz.com.cn

MARKET DEPARTMENT
ADD: No.99 Shenzhen Street, Jilin City, Jilin Province, China.
Post Code: 132013
Tel: 86-432-64675588
64675688
64678411-3098/3099
Fax: 86-432-64671533

ENTEGRECİ

Bu belge www.entegreci.com üzerinden sunulmaktadır.

Elektronik komponent tedarikinde Entegreci

Entegreci, Eskişehir merkezli, Türkiye geneline satış yapan bir elektronik komponent mağazasıdır. Entegreler (IC), mikrodenetleyiciler, transistörler, diyotlar, pasif elemanlar, konnektörler, modüller ve geliştirme kartları tek adetten seri üretim adetlerine kadar satılır. Ürün sayfalarında güncel stok durumunu, fiyatı ve datasheet bağlantısını bulabilirsiniz.

Parça koduyla arama

Üretici parça numarasını yazın; stok ve fiyatı hemen görün.

www.entegreci.com

Ürün kategorileri

Entegreden kapasitöre tüm elektronik komponent kategorileri.

Kategorilere göz atın

Üreticiler

Aradığınız üreticinin ürünlerini tek sayfada inceleyin.

Üreticileri görün

Toplu alım ve teklif

Listede olmayan ya da yüksek adetli parçalar için teklif isteyin.

Teklif isteyin

www.entegreci.com | **destek@entegreci.com** | **0850 305 90 34**

Entegreci is an online electronic components store based in Türkiye. Search by manufacturer part number to see stock, prices and datasheets for integrated circuits, microcontrollers, transistors, passive components and connectors, or request a quote for parts that are not listed.

Bu sayfa Entegreci tarafından eklenmiştir. Belgenin önceki sayfaları asıl yayıncısına aittir ve içeriği değiştirilmemiştir; en güncel sürüm için belgenin yayıncısına başvurun.