International
IOR Rectifier

PD-95314A

IRFR5410PbF
IRFU5410PbF

HEXFET® Power MOSFET

- Ultra Low On-Resistance
- P-Channel
- Surface Mount (IRFR5410)
- Straight Lead (IRFU5410)
- Advanced Process Technology
- Fast Switching
- Fully Avalanche Rated
- Lead-Free

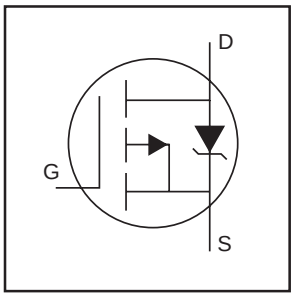

V_{DSS} = -100V

$R_{DS(on)}$ = 0.205Ω

I_D = -13A

Description

Fifth Generation HEXFETs from International Rectifier utilize advanced processing techniques to achieve extremely low on-resistance per silicon area. This benefit, combined with the fast switching speed and ruggedized device design that HEXFET Power MOSFETs are well known for, provides the designer with an extremely efficient and reliable device for use in a wide variety of applications.

The D-Pak is designed for surface mounting using vapor phase, infrared, or wave soldering techniques. The straight lead version (IRFU series) is for through-hole mounting applications. Power dissipation levels up to 1.5 watts are possible in typical surface mount applications.

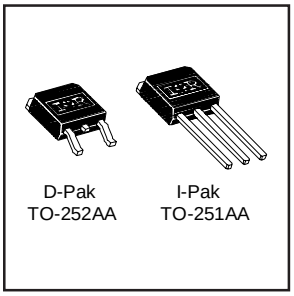

D-Pak TO-252AA | I-Pak TO-251AA

Absolute Maximum Ratings

	Parameter	Max.	Units
I_D @ T_C = 25°C	Continuous Drain Current, V_{GS} @ -10V	-13	A
I_D @ T_C = 100°C	Continuous Drain Current, V_{GS} @ -10V	-8.2	
I_{DM}	Pulsed Drain Current ①	-52	
P_D @T_C = 25°C	Power Dissipation	66	W
	Linear Derating Factor	0.53	W/°C
V_{GS}	Gate-to-Source Voltage	± 20	V
E_{AS}	Single Pulse Avalanche Energy②	194	mJ
I_{AR}	Avalanche Current①	-8.4	A
E_{AR}	Repetitive Avalanche Energy①	6.3	mJ
dv/dt	Peak Diode Recovery dv/dt ③	-5.0	V/ns
T_J	Operating Junction and	-55 to + 150	°C
T_{STG}	Storage Temperature Range		
	Soldering Temperature, for 10 seconds	300 (1.6mm from case)	

Thermal Resistance

	Parameter	Typ.	Max.	Units
$R_{\theta JC}$	Junction-to-Case	–––	1.9	°C/W
$R_{\theta JA}$	Junction-to-Ambient (PCB mount)**	–––	50	
$R_{\theta JA}$	Junction-to-Ambient	–––	110	

Electrical Characteristics @ T_J = 25°C (unless otherwise specified)

	Parameter	Min.	Typ.	Max.	Units	Conditions
$V_{(BR)DSS}$	Drain-to-Source Breakdown Voltage	-100	–––	–––	V	V_{GS} = 0V, I_D = -250µA
$\Delta V_{(BR)DSS}/\Delta T_J$	Breakdown Voltage Temp. Coefficient	–––	-0.12	–––	V/°C	Reference to 25°C, I_D = -1.0mA
$R_{DS(on)}$	Static Drain-to-Source On-Resistance	–––	–––	0.205	Ω	V_{GS} = -10V, I_D = -7.8A ④
$V_{GS(th)}$	Gate Threshold Voltage	-2.0	–––	-4.0	V	V_{DS} = V_{GS}, I_D = -250µA
g_{fs}	Forward Transconductance	3.2	–––	–––	S	V_{DS} = -50V, I_D = -7.8A
I_{DSS}	Drain-to-Source Leakage Current	–––	–––	-25	µA	V_{DS} = -100V, V_{GS} = 0V
		–––	–––	-250		V_{DS} = -80V, V_{GS} = 0V, T_J = 150°C
I_{GSS}	Gate-to-Source Forward Leakage	–––	–––	100	nA	V_{GS} = 20V
	Gate-to-Source Reverse Leakage	–––	–––	-100		V_{GS} = -20V
Q_g	Total Gate Charge	–––	–––	58	nC	I_D = -8.4A
Q_{gs}	Gate-to-Source Charge	–––	–––	8.3		V_{DS} = -80V
Q_{gd}	Gate-to-Drain ("Miller") Charge	–––	–––	32		V_{GS} = -10V, See Fig. 6 and 13 ④⑥
$t_{d(on)}$	Turn-On Delay Time	–––	15	–––	ns	V_{DD} = 50V
t_r	Rise Time	–––	58	–––		I_D = -8.4A
$t_{d(off)}$	Turn-Off Delay Time	–––	45	–––		R_G = 9.1Ω
t_f	Fall Time	–––	46	–––		R_D =6.2Ω, See Fig. 10 ④⑥
L_D	Internal Drain Inductance	–––	4.5	–––	nH	Between lead, 6mm (0.25in.) from package and center of die contact⑤
L_S	Internal Source Inductance	–––	7.5	–––		
C_{iss}	Input Capacitance	–––	760	–––	pF	V_{GS} = 0V
C_{oss}	Output Capacitance	–––	260	–––		V_{DS} = -25V
C_{rss}	Reverse Transfer Capacitance	–––	170	–––		f = 1.0MHz, See Fig. 5⑥

Source-Drain Ratings and Characteristics

	Parameter	Min.	Typ.	Max.	Units	Conditions
I_S	Continuous Source Current (Body Diode)	–––	–––	-13	A	MOSFET symbol showing the integral reverse p-n junction diode.
I_{SM}	Pulsed Source Current (Body Diode) ①	–––	–––	-52		
V_{SD}	Diode Forward Voltage	–––	–––	-1.6	V	T_J = 25°C, I_S = -7.8A, V_{GS} = 0V ④
t_{rr}	Reverse Recovery Time	–––	130	190	ns	T_J = 25°C, I_F = -8.4A
Q_{rr}	Reverse Recovery Charge	–––	650	970	nC	di/dt = 100A/µs ④⑥
t_{on}	Forward Turn-On Time	Intrinsic turn-on time is negligible (turn-on is dominated by L_S+L_D)				

Notes:

① Repetitive rating; pulse width limited by max. junction temperature. (See fig. 11)

② Starting T_J = 25°C, L = 6.4mH R_G = 25Ω, I_{AS} = -7.8A. (See Figure 12)

③ I_{SD} ≤ -7.8A, di/dt ≤ 200A/µs, V_{DD} ≤ $V_{(BR)DSS}$, T_J ≤ 150°C

④ Pulse width ≤ 300µs; duty cycle ≤ 2%.

⑤ This is applied for I-PAK, L_S of D-PAK is measured between lead and center of die contact

⑥ Uses IRF9530N data and test conditions.

** When mounted on 1" square PCB (FR-4 or G-10 Material) .
For recommended footprint and soldering techniques refer to application note #AN-994

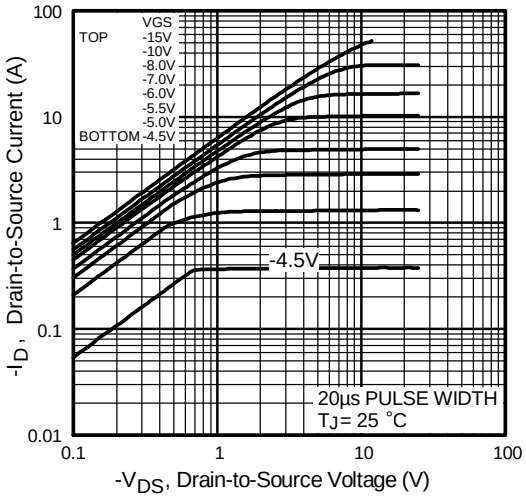

Fig 1. Typical Output Characteristics

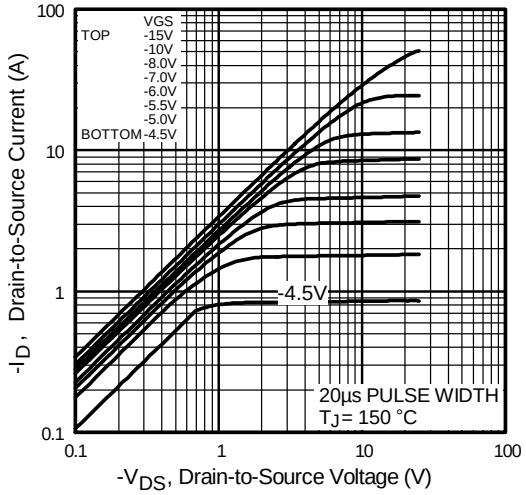

Fig 2. Typical Output Characteristics

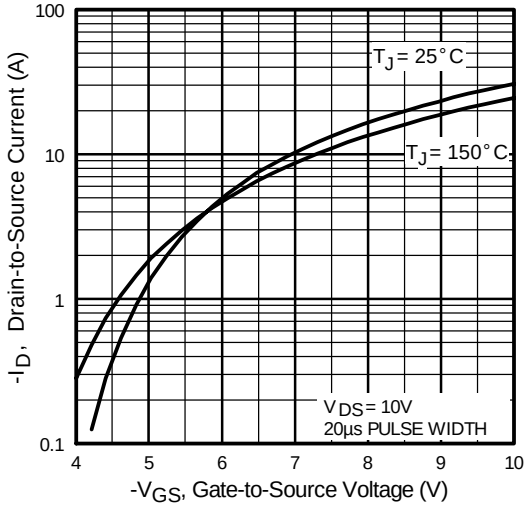

Fig 3. Typical Transfer Characteristics

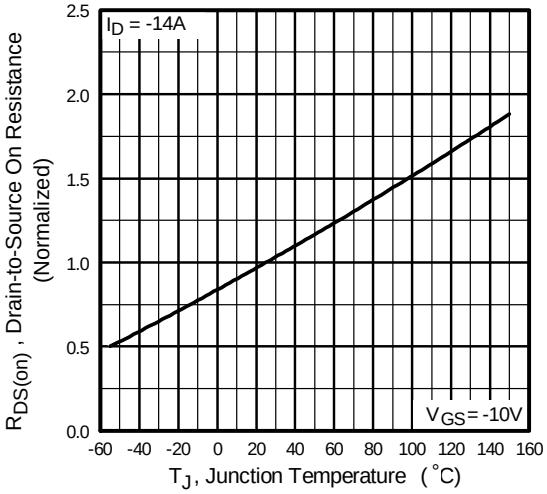

Fig 4. Normalized On-Resistance Vs. Temperature

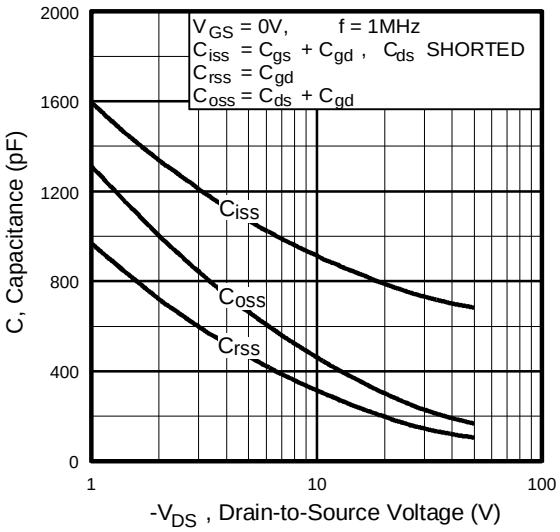

Fig 5. Typical Capacitance Vs. Drain-to-Source Voltage

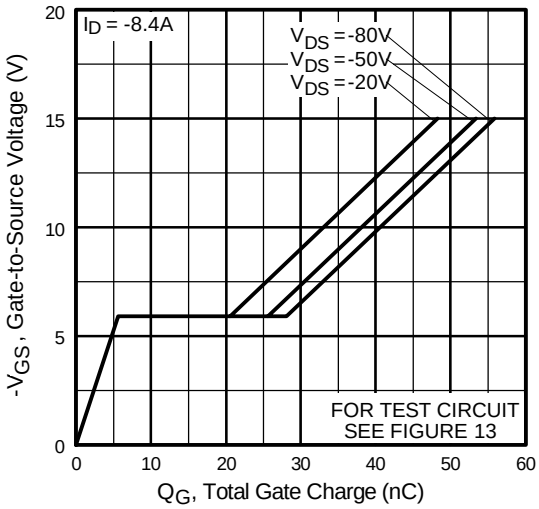

Fig 6. Typical Gate Charge Vs. Gate-to-Source Voltage

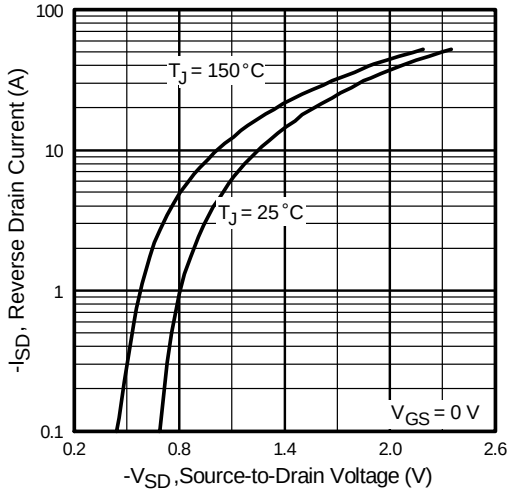

Fig 7. Typical Source-Drain Diode Forward Voltage

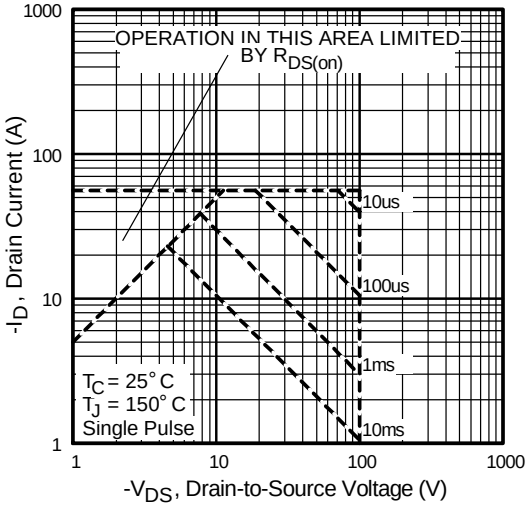

Fig 8. Maximum Safe Operating Area

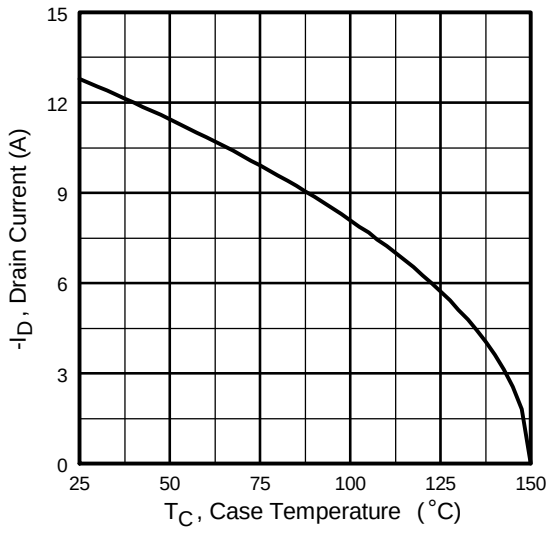

Fig 9. Maximum Drain Current Vs. Case Temperature

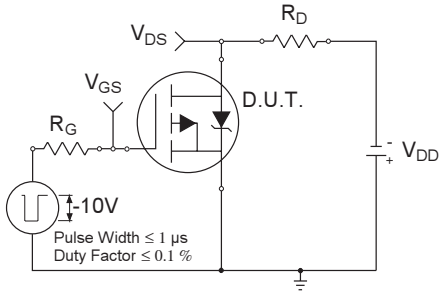

Fig 10a. Switching Time Test Circuit

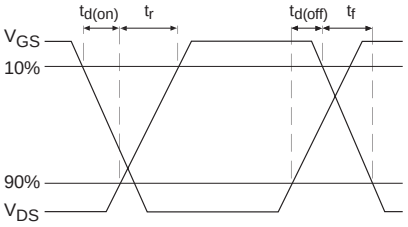

Fig 10b. Switching Time Waveforms

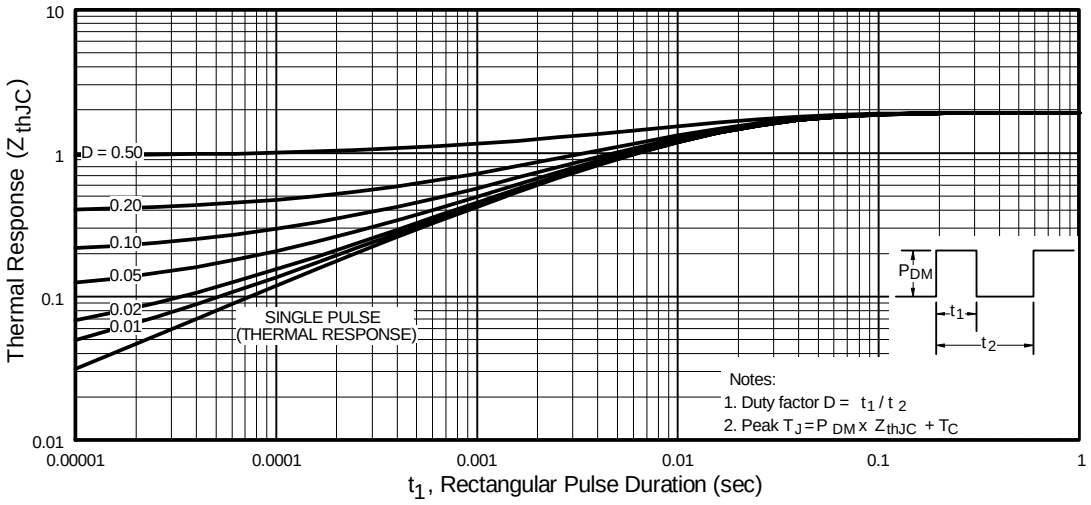

Fig 11. Maximum Effective Transient Thermal Impedance, Junction-to-Case

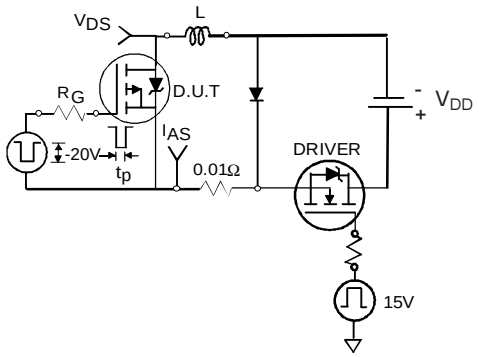

Fig 12a. Unclamped Inductive Test Circuit

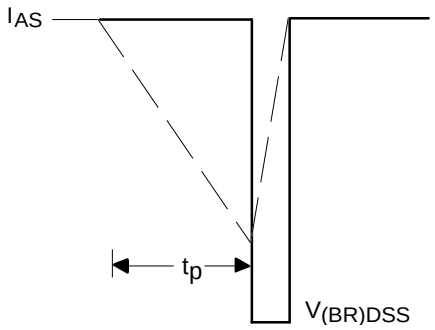

Fig 12b. Unclamped Inductive Waveforms

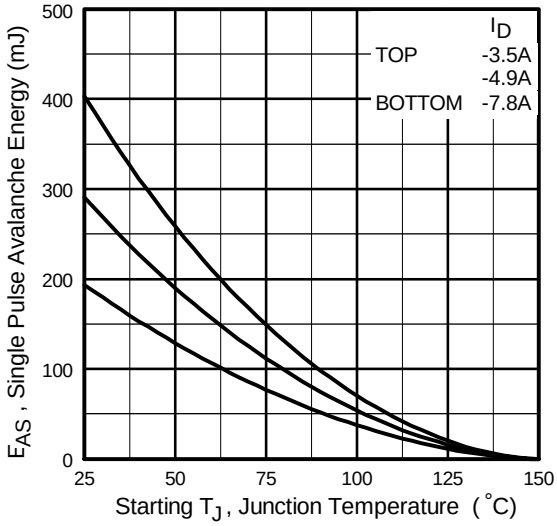

Fig 12c. Maximum Avalanche Energy Vs. Drain Current

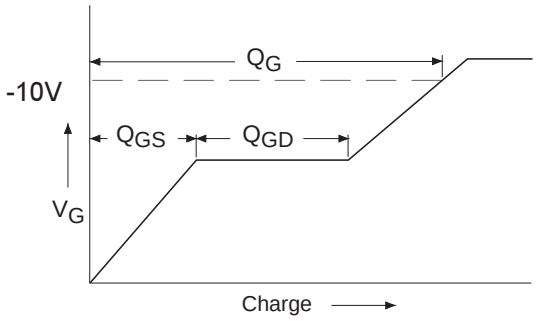

Fig 13a. Basic Gate Charge Waveform

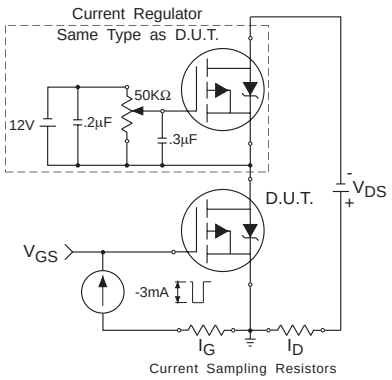

Fig 13b. Gate Charge Test Circuit

Peak Diode Recovery dv/dt Test Circuit

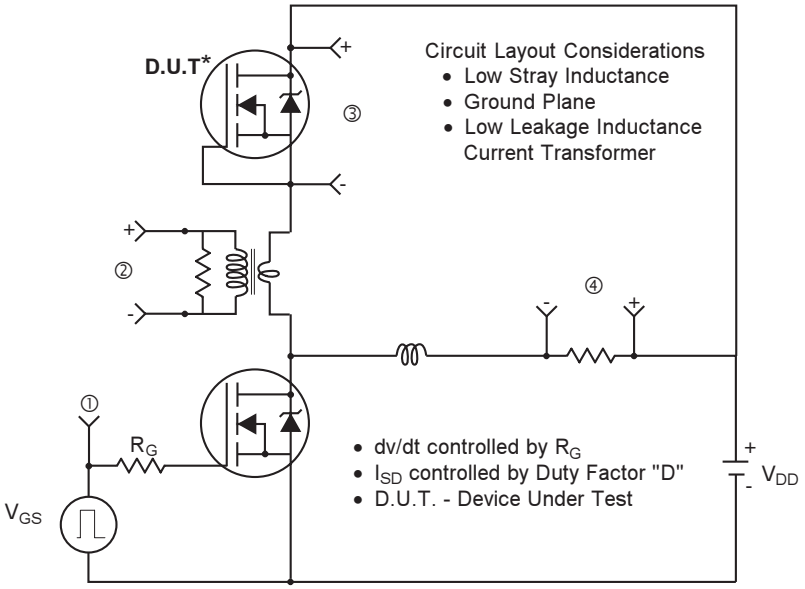

* Reverse Polarity of D.U.T for P-Channel

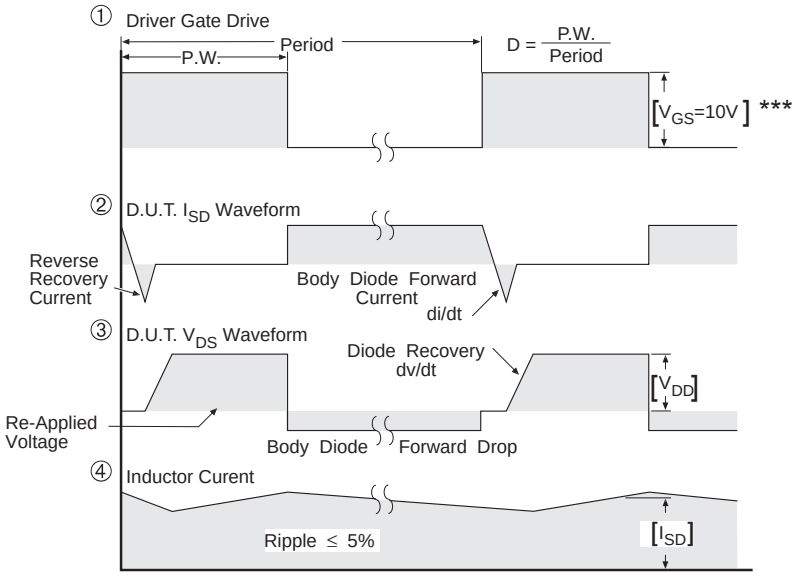

*** V_{GS} = 5.0V for Logic Level and 3V Drive Devices

Fig 14. For P-Channel HEXFETS

D-Pak (TO-252AA) Package Outline

Dimensions are shown in millimeters (inches)

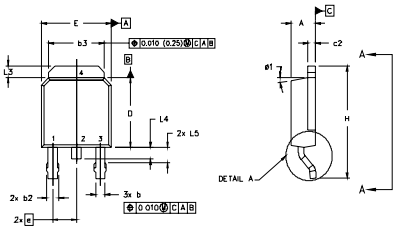

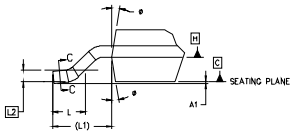

DETAIL "A"
ROTATED 90°

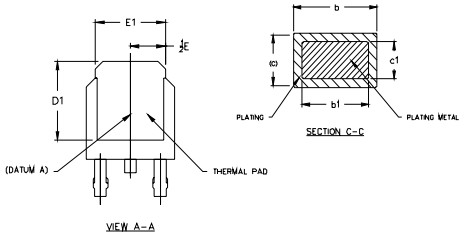

VIEW A-A

SECTION C-C

NOTES:

1.0 DIMENSIONING AND TOLERANCING PER ASME Y14.5 M- 1994.
2.0 DIMENSIONS ARE SHOWN IN INCHES [MILLIMETERS].
3.0 LEAD DIMENSION UNCONTROLLED IN L5
4.0 DIMENSION D1 AND E1 ESTABLISH A MINIMUM MOUNTING SURFACE FOR THERMAL PAD.
5.0 SECTION C-C DIMENSIONS APPLY TO THE FLAT SECTION OF THE LEAD BETWEEN .005 [0.127] AND .010 [0.2540 FROM THE LEAD TIP.
6.0 DIMENSION D & E DO NOT INCLUDE MOLD FLASH. MOLD FLASH SHALL NOT EXCEED .005" (0.127) PER SIDE. THESE DIMENSIONS ARE MEASURED AT THE OUTERMOST EXTREMES OF THE PLASTIC BODY.
7.0 OUTLINE CONFORMS TO JEDEC OUTLINE TO-252AA.

SYMBOL	DIMENSIONS				NOTES
	MILLIMETERS		INCHES		
	MIN.	MAX.	MIN.	MAX.	
A	2.18	2.39	.086	.094	
A1		0.13		.005	
b	0.64	0.89	.025	.035	5
b1	0.64	0.79	.025	0.031	5
b2	0.76	1.14	.030	.045	
b3	4.95	5.46	.195	.215	
c	0.46	0.61	.018	.024	6
c1	0.41	0.56	.016	.022	5
c2	.046	0.89	.018	.035	6
D	5.97	6.22	.235	.245	6
D1	5.21	-	.205	-	4
E	6.35	6.73	.250	.265	6
E1	4.32	-	.170		4
e	2.29		.090 BSC		
H	9.40	10.41	.370	.410	
L	1.40	1.78	.055	.070	
L1	2.74 REF.		.108 REF.		
L2	0.051 BSC		.020 BSC		
L3	0.89	1.27	.035	.050	
L4		1.02		.040	
L5	1.14	1.52	.045	.060	3
θ	0°	10°	0°	10°	
θ1	0°	15°	0°	15°	

LEAD ASSIGNMENTS

HEXFET

1.- GATE
2.- DRAIN
3.- SOURCE
4.- DRAIN

IGBTs, CoPACK

1.- GATE
2.- COLLECTOR
3.- EMITTER
4.- COLLECTOR

D-Pak (TO-252AA) Part Marking Information

EXAMPLE: THIS IS AN IRFR120
WITH ASSEMBLY
LOT CODE 1234
ASSEMBLED ON WW 16, 1999
IN THE ASSEMBLY LINE "A"

Note: "P" in assembly line position
indicates "Lead-Free"

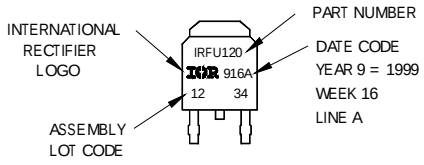

OR

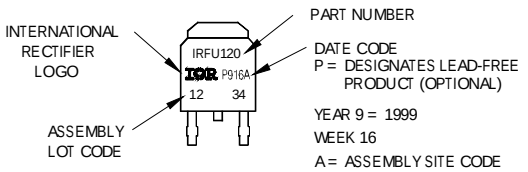

I-Pak (TO-251AA) Package Outline

Dimensions are shown in millimeters (inches)

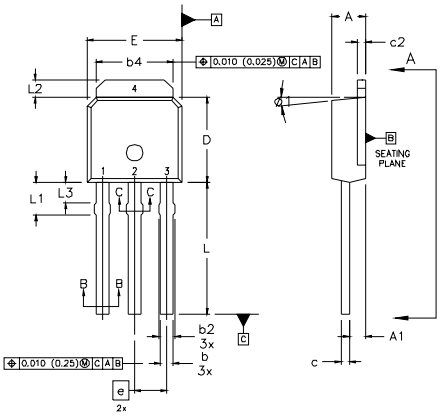

NOTES:

1 DIMENSIONING AND TOLERANCING PER ASME Y14.5 M- 1994.
2 DIMENSIONS ARE SHOWN IN MILLIMETERS [INCHES].
3 DIMENSION D & E DO NOT INCLUDE MOLD FLASH. MOLD FLASH SHALL NOT EXCEED 0.005" (0.127) PER SIDE. THESE DIMENSIONS ARE MEASURED AT THE OUTERMOST EXTREMES OF THE PLASTIC BODY.
4 THERMAL PAD CONTOUR OPTION WITHIN DIMENSION b4, L2, E1 & D1.
5 LEAD DIMENSION UNCONTROLLED IN L3.
6 DIMENSION b1, b3 APPLY TO BASE METAL ONLY.
7 OUTLINE CONFORMS TO JEDEC OUTLINE TO-251AA.
8 CONTROLLING DIMENSION : INCHES.

SYMBOL	DIMENSIONS				NOTES
	MILLIMETERS		INCHES		
	MIN.	MAX.	MIN.	MAX.	
A	2.18	2.39	0.086	.094	
A1	0.89	1.14	0.035	0.045	
b	0.64	0.89	0.025	0.035	
b1	0.64	0.79	0.025	0.031	4
b2	0.76	1.14	0.030	0.045	
b3	0.76	1.04	0.030	0.041	
b4	5.00	5.46	0.195	0.215	4
c	0.46	0.61	0.018	0.024	
c1	0.41	0.56	0.016	0.022	
c2	.046	0.86	0.018	0.035	
D	5.97	6.22	0.235	0.245	3, 4
D1	5.21	–	0.205	–	4
E	6.35	6.73	0.250	0.265	3, 4
E1	4.32	–	0.170	–	4
e	2.29		0.090 BSC		
L	8.89	9.60	0.350	0.380	
L1	1.91	2.29	0.075	0.090	
L2	0.89	1.27	0.035	0.050	4
L3	1.14	1.52	0.045	0.060	5
ø1	0°	15°	0°	15°	

LEAD ASSIGNMENTS

HEXFET

1.- GATE
2.- DRAIN
3.- SOURCE
4.- DRAIN

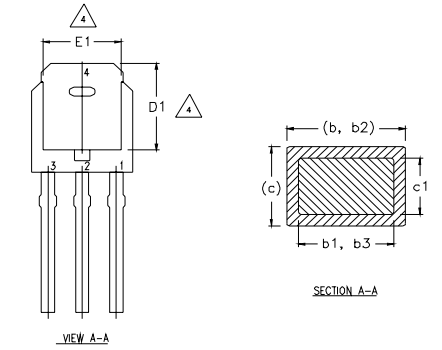

I-Pak (TO-251AA) Part Marking Information

EXAMPLE: THIS IS AN IRFU120
WITH ASSEMBLY
LOT CODE 5678
ASSEMBLED ON WW 19, 1999
IN THE ASSEMBLY LINE "A"

Note: "P" in assembly line position indicates "Lead-Free"

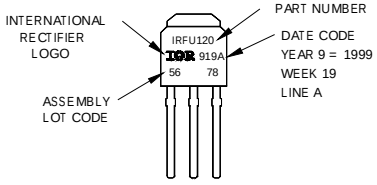

OR

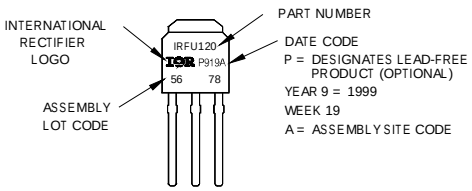

D-Pak (TO-252AA) Tape & Reel Information

Dimensions are shown in millimeters (inches)

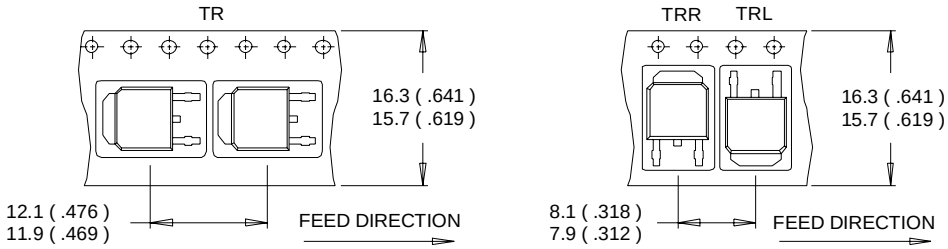

NOTES :
1. CONTROLLING DIMENSION : MILLIMETER.
2. ALL DIMENSIONS ARE SHOWN IN MILLIMETERS (INCHES).
3. OUTLINE CONFORMS TO EIA-481 & EIA-541.

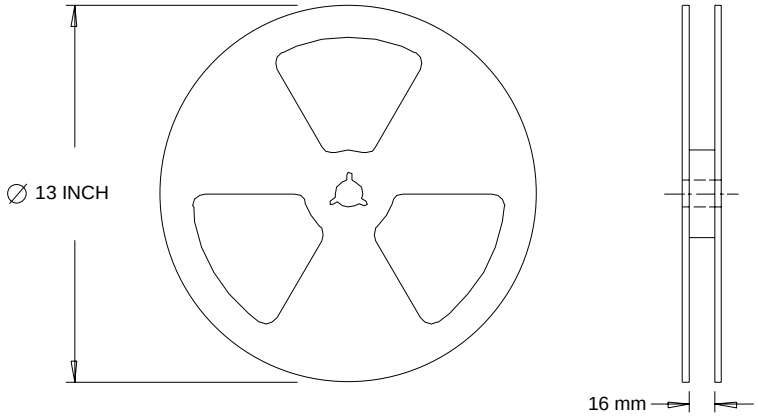

NOTES :
1. OUTLINE CONFORMS TO EIA-481.

Data and specifications subject to change without notice.

International
IOR Rectifier

IR WORLD HEADQUARTERS: 233 Kansas St., El Segundo, California 90245, USA Tel: (310) 252-7105
TAC Fax: (310) 252-7903
Visit us at www.irf.com for sales contact information.12/04

Note: For the most current drawings please refer to the IR website at:
http://www.irf.com/package/

ENTEGRECİ

Bu belge www.entegreci.com üzerinden sunulmaktadır.

Elektronik komponent tedarikinde Entegreci

Entegreci, Eskişehir merkezli, Türkiye geneline satış yapan bir elektronik komponent mağazasıdır. Entegreler (IC), mikrodenetleyiciler, transistörler, diyotlar, pasif elemanlar, konnektörler, modüller ve geliştirme kartları tek adetten seri üretim adetlerine kadar satılır. Ürün sayfalarında güncel stok durumunu, fiyatı ve datasheet bağlantısını bulabilirsiniz.

Parça koduyla arama

Üretici parça numarasını yazın; stok ve fiyatı hemen görün.

www.entegreci.com

Ürün kategorileri

Entegreden kapasitöre tüm elektronik komponent kategorileri.

Kategorilere göz atın

Üreticiler

Aradığınız üreticinin ürünlerini tek sayfada inceleyin.

Üreticileri görün

Toplu alım ve teklif

Listede olmayan ya da yüksek adetli parçalar için teklif isteyin.

Teklif isteyin

www.entegreci.com | **destek@entegreci.com** | **0850 305 90 34**

Entegreci is an online electronic components store based in Türkiye. Search by manufacturer part number to see stock, prices and datasheets for integrated circuits, microcontrollers, transistors, passive components and connectors, or request a quote for parts that are not listed.

Bu sayfa Entegreci tarafından eklenmiştir. Belgenin önceki sayfaları asıl yayıncısına aittir ve içeriği değiştirilmemiştir; en güncel sürüm için belgenin yayıncısına başvurun.