International
IOR Rectifier

PD - 95493A

IRF2805PbF

HEXFET® Power MOSFET

Typical Applications
- Industrial Motor Drive

Features
- Advanced Process Technology
- Ultra Low On-Resistance
- 175°C Operating Temperature
- Fast Switching
- Repetitive Avalanche Allowed up to Tjmax
- Lead-Free

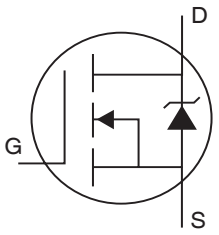

V_{DSS} = 55V

$R_{DS(on)}$ = 4.7mΩ

I_D = 75A



TO-220AB

Description
This HEXFET® Power MOSFET utilizes the latest processing techniques to achieve extremely low on-resistance per silicon area. Additional features of this design are a 175°C junction operating temperature, fast switching speed and improved repetitive avalanche rating . These features combine to make this design an extremely efficient and reliable device for use in a wide variety of applications.

Absolute Maximum Ratings

	Parameter	Max.	Units
I_D @ T_C = 25°C	Continuous Drain Current, V_{GS} @ 10V (Silicon limited)	175	A
I_D @ T_C = 100°C	Continuous Drain Current, V_{GS} @ 10V (See Fig.9)	120	
I_D @ T_C = 25°C	Continuous Drain Current, V_{GS} @ 10V (Package limited)	75	
I_{DM}	Pulsed Drain Current ①	700	
P_D @T_C = 25°C	Power Dissipation	330	W
	Linear Derating Factor	2.2	W/°C
V_{GS}	Gate-to-Source Voltage	± 20	V
E_{AS}	Single Pulse Avalanche Energy②	450	mJ
E_{AS} (6 sigma)	Single Pulse Avalanche Energy Tested Value⑦	1220	
I_{AR}	Avalanche Current①	See Fig.12a, 12b, 15, 16	A
E_{AR}	Repetitive Avalanche Energy⑥		mJ
T_J	Operating Junction and	-55 to + 175	°C
T_{STG}	Storage Temperature Range		
	Soldering Temperature, for 10 seconds	300 (1.6mm from case)	
	Mounting Torque, 6-32 or M3 screw	1.1 (10)	N•m (lbf•in)

Thermal Resistance

	Parameter	Typ.	Max.	Units
$R_{\theta JC}$	Junction-to-Case	—	0.45	°C/W
$R_{\theta CS}$	Case-to-Sink, Flat, Greased Surface	0.50	—	
$R_{\theta JA}$	Junction-to-Ambient	—	62	

HEXFET(R) is a registered trademark of International Rectifier.

Electrical Characteristics @ T_J = 25°C (unless otherwise specified)

	Parameter	Min.	Typ.	Max.	Units	Conditions
$V_{(BR)DSS}$	Drain-to-Source Breakdown Voltage	55	—	—	V	V_{GS} = 0V, I_D = 250µA
$\Delta V_{(BR)DSS}/\Delta T_J$	Breakdown Voltage Temp. Coefficient	—	0.06	—	V/°C	Reference to 25°C, I_D = 1mA
$R_{DS(on)}$	Static Drain-to-Source On-Resistance	—	3.9	4.7	mΩ	V_{GS} = 10V, I_D = 104A ④
$V_{GS(th)}$	Gate Threshold Voltage	2.0	—	4.0	V	V_{DS} = 10V, I_D = 250µA
g_{fs}	Forward Transconductance	91	—	—	S	V_{DS} = 25V, I_D = 104A
I_{DSS}	Drain-to-Source Leakage Current	—	—	20	µA	V_{DS} = 55V, V_{GS} = 0V
		—	—	250		V_{DS} = 55V, V_{GS} = 0V, T_J = 125°C
I_{GSS}	Gate-to-Source Forward Leakage	—	—	200	nA	V_{GS} = 20V
	Gate-to-Source Reverse Leakage	—	—	-200		V_{GS} = -20V
Q_g	Total Gate Charge	—	150	230	nC	I_D = 104A
Q_{gs}	Gate-to-Source Charge	—	38	57		V_{DS} = 44V
Q_{gd}	Gate-to-Drain ("Miller") Charge	—	52	78		V_{GS} = 10V ④
$t_{d(on)}$	Turn-On Delay Time	—	14	—	ns	V_{DD} = 28V
t_r	Rise Time	—	120	—		I_D = 104A
$t_{d(off)}$	Turn-Off Delay Time	—	68	—		R_G = 2.5Ω
t_f	Fall Time	—	110	—		V_{GS} = 10V ④
L_D	Internal Drain Inductance	—	4.5	—	nH	Between lead, 6mm (0.25in.) from package and center of die contact
L_S	Internal Source Inductance	—	7.5	—		
C_{iss}	Input Capacitance	—	5110	—	pF	V_{GS} = 0V
C_{oss}	Output Capacitance	—	1190	—		V_{DS} = 25V
C_{rss}	Reverse Transfer Capacitance	—	210	—		f = 1.0MHz, See Fig. 5
C_{oss}	Output Capacitance	—	6470	—		V_{GS} = 0V, V_{DS} = 1.0V, f = 1.0MHz
C_{oss}	Output Capacitance	—	860	—		V_{GS} = 0V, V_{DS} = 44V, f = 1.0MHz
C_{oss} eff.	Effective Output Capacitance ⑤	—	1600	—		V_{GS} = 0V, V_{DS} = 0V to 44V

Source-Drain Ratings and Characteristics

	Parameter	Min.	Typ.	Max.	Units	Conditions
I_S	Continuous Source Current (Body Diode)	—	—	175	A	MOSFET symbol showing the integral reverse p-n junction diode.
I_{SM}	Pulsed Source Current (Body Diode) ①	—	—	700		
V_{SD}	Diode Forward Voltage	—	—	1.3	V	T_J = 25°C, I_S = 104A, V_{GS} = 0V ④
t_{rr}	Reverse Recovery Time	—	80	120	ns	T_J = 25°C, I_F = 104A
Q_{rr}	Reverse Recovery Charge	—	290	430	nC	di/dt = 100A/µs ④
t_{on}	Forward Turn-On Time	Intrinsic turn-on time is negligible (turn-on is dominated by L_S+L_D)				

Notes:

① Repetitive rating; pulse width limited by max. junction temperature. (See fig. 11).

② Starting T_J = 25°C, L = 0.08mH R_G = 25Ω, I_{AS} = 104A. (See Figure 12).

③ I_{SD} ≤ 104A, di/dt ≤ 240A/µs, V_{DD} ≤ $V_{(BR)DSS}$, T_J ≤ 175°C

④ Pulse width ≤ 400µs; duty cycle ≤ 2%.

⑤ C_{oss} eff. is a fixed capacitance that gives the same charging time as C_{oss} while V_{DS} is rising from 0 to 80% V_{DSS} .

⑥ Limited by T_{Jmax} , see Fig.12a, 12b, 15, 16 for typical repetitive avalanche performance.

⑦ This value determined from sample failure population. 100% tested to this value in production.

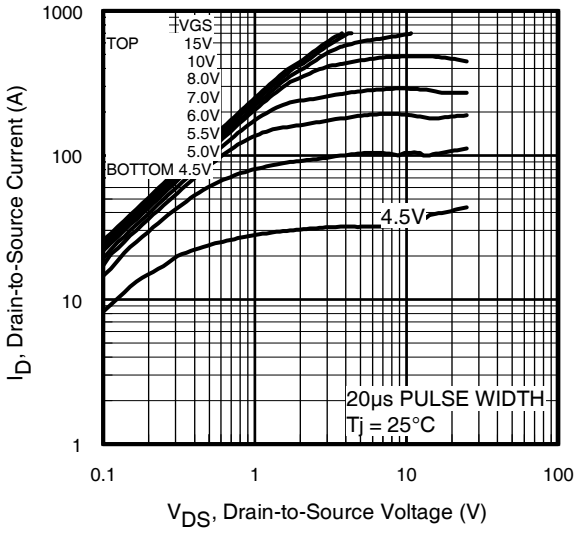

Fig 1. Typical Output Characteristics

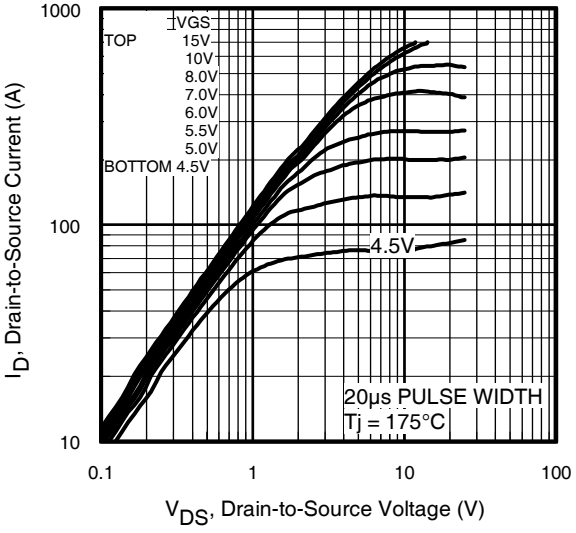

Fig 2. Typical Output Characteristics

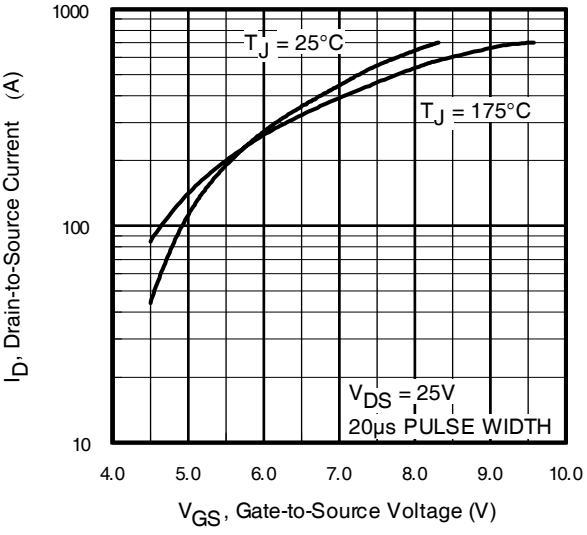

Fig 3. Typical Transfer Characteristics

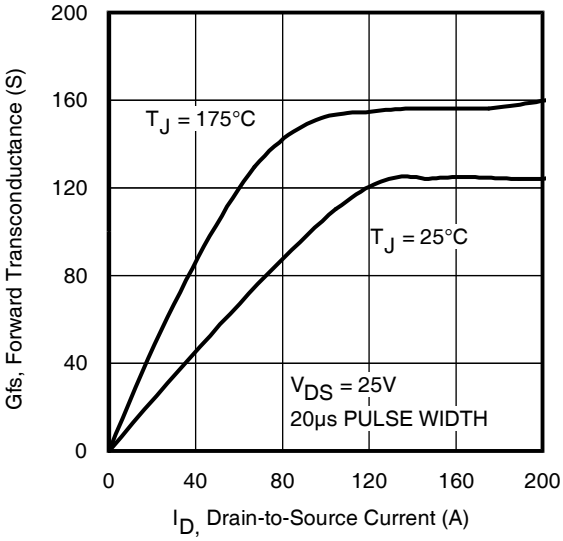

Fig 4. Typical Forward Transconductance Vs. Drain Current

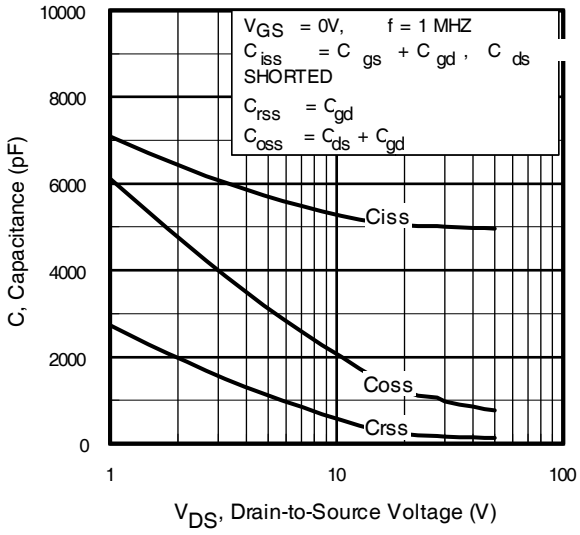

Fig 5. Typical Capacitance Vs. Drain-to-Source Voltage

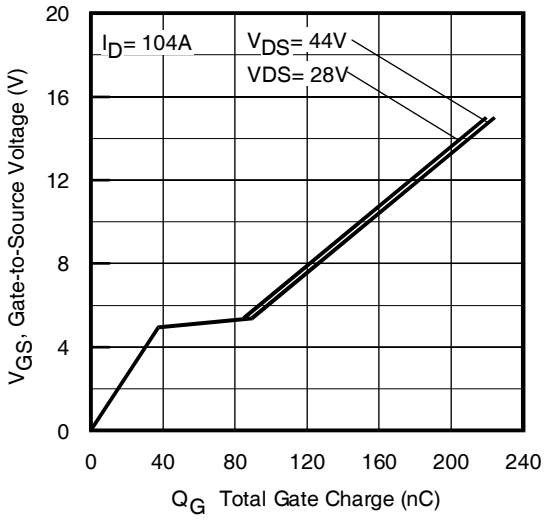

Fig 6. Typical Gate Charge Vs. Gate-to-Source Voltage

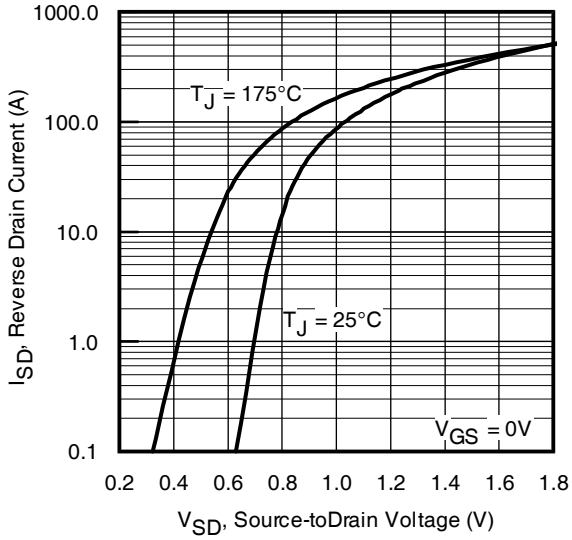

Fig 7. Typical Source-Drain Diode Forward Voltage

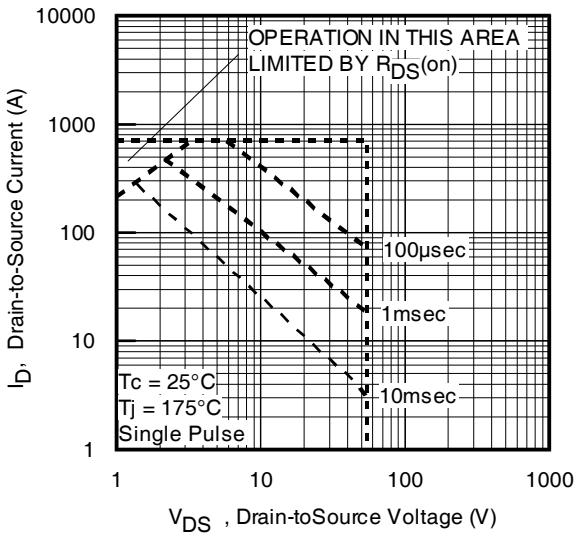

Fig 8. Maximum Safe Operating Area

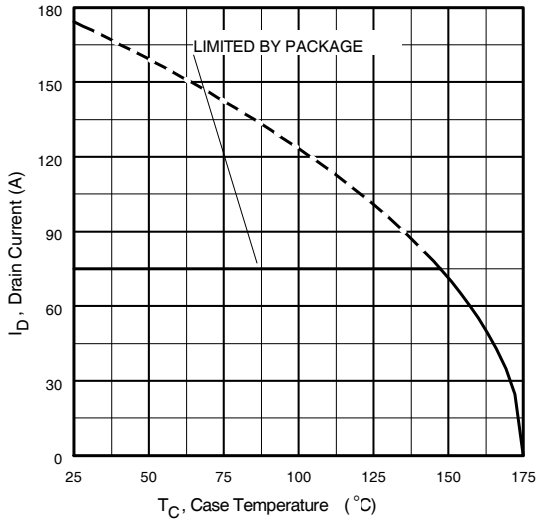

Fig 9. Maximum Drain Current Vs. Case Temperature

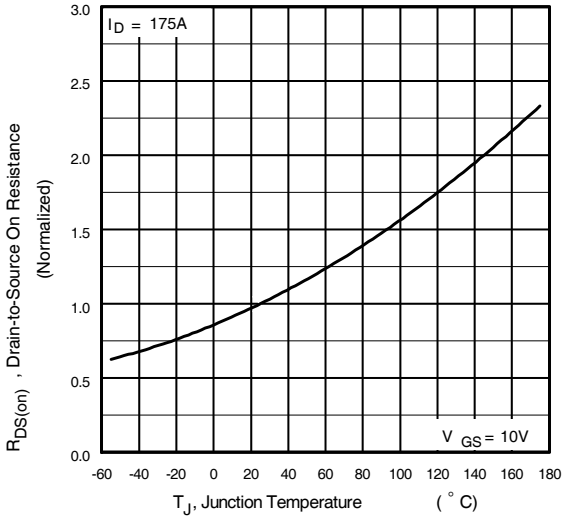

Fig 10. Normalized On-Resistance Vs. Temperature

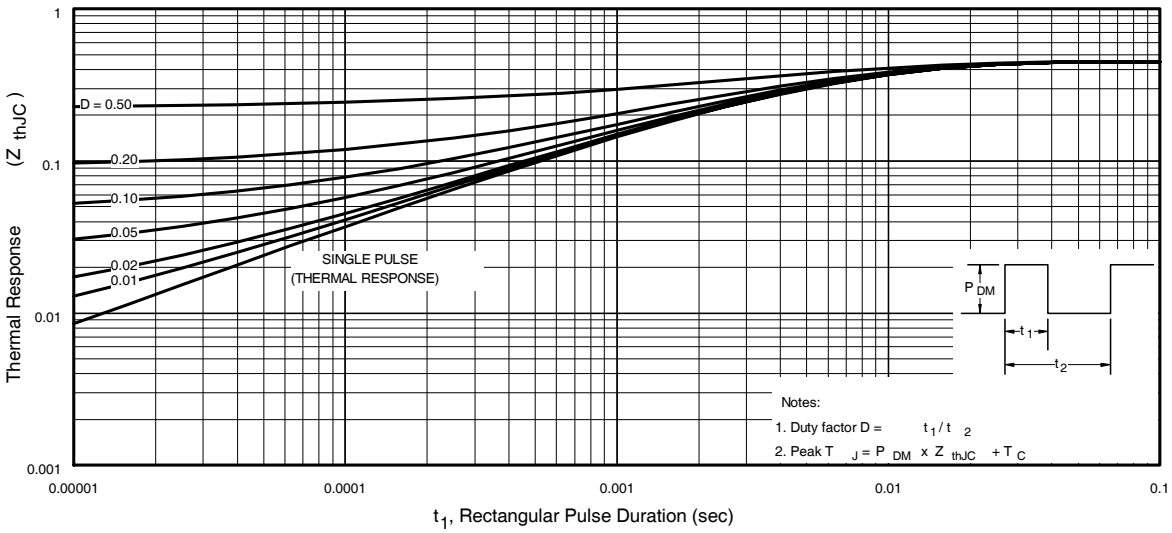

Fig 11. Maximum Effective Transient Thermal Impedance, Junction-to-Case

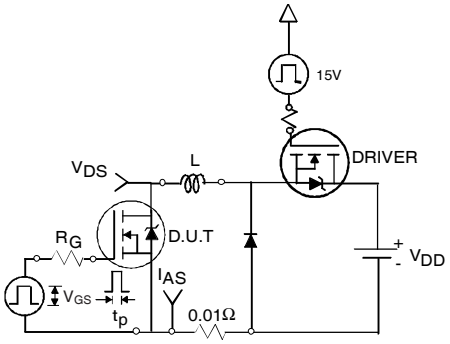

Fig 12a. Unclamped Inductive Test Circuit

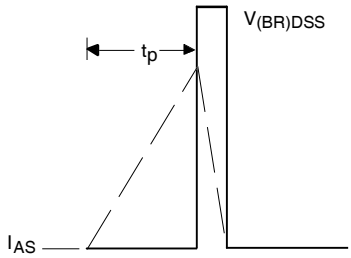

Fig 12b. Unclamped Inductive Waveforms

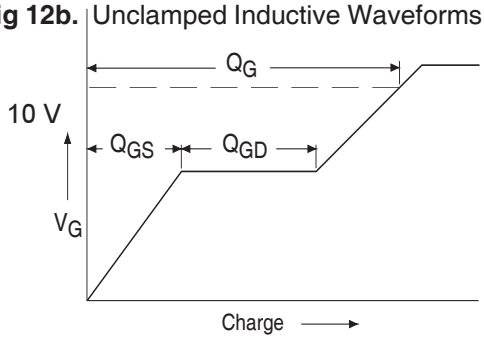

Fig 13a. Basic Gate Charge Waveform

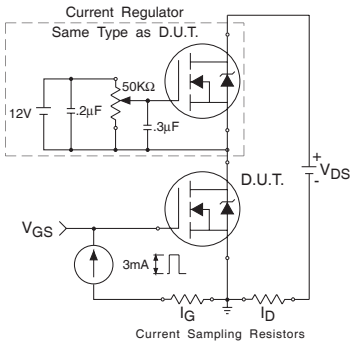

Fig 13b. Gate Charge Test Circuit

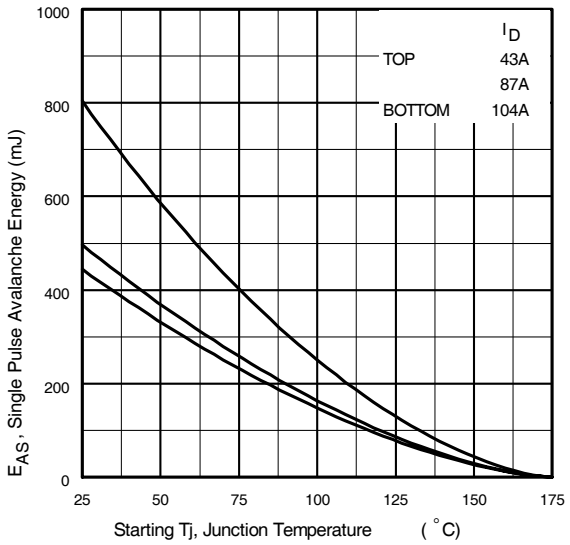

Fig 12c. Maximum Avalanche Energy Vs. Drain Current

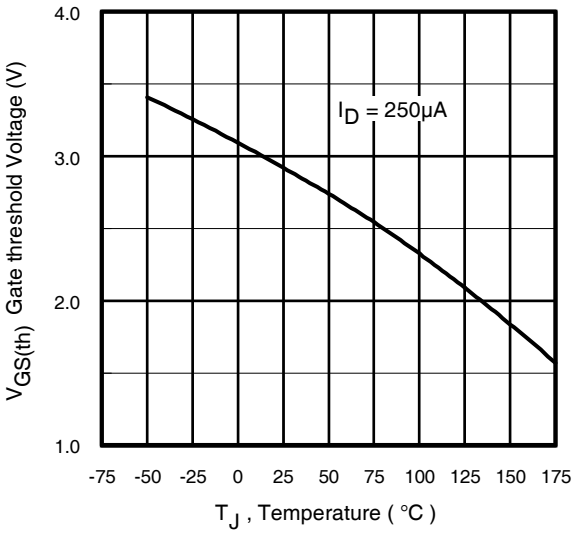

Fig 14. Threshold Voltage Vs. Temperature

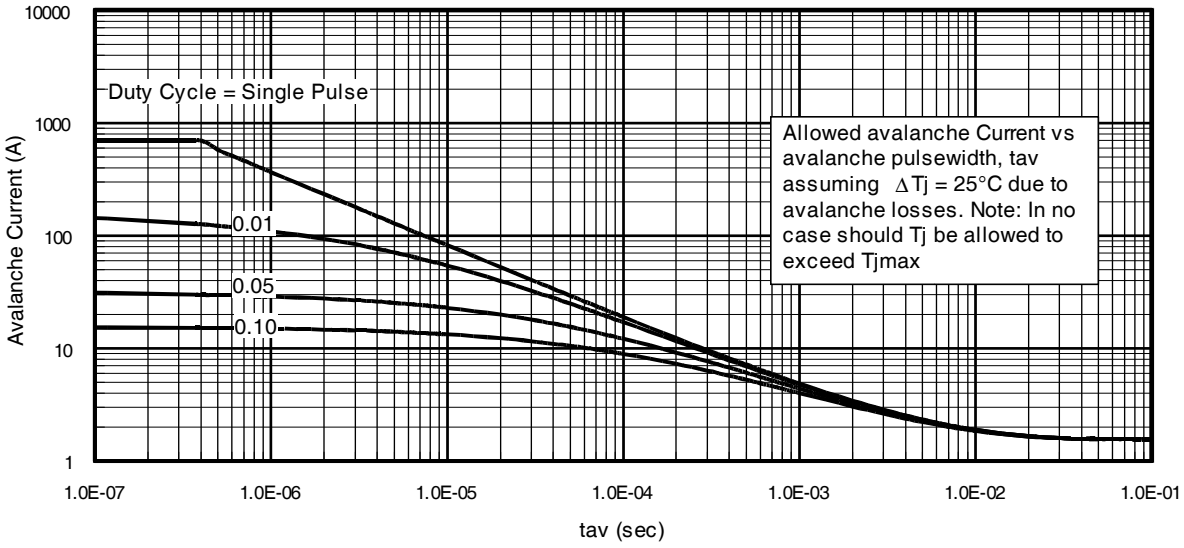

Fig 15. Typical Avalanche Current Vs.Pulsewidth

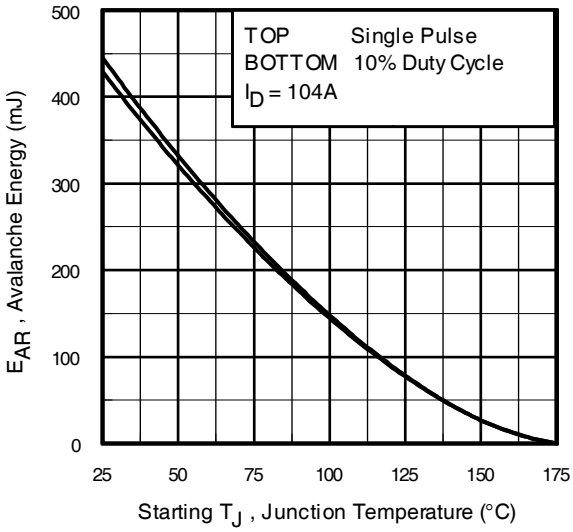

Fig 16. Maximum Avalanche Energy Vs. Temperature

Notes on Repetitive Avalanche Curves , Figures 15, 16: (For further info, see AN-1005 at www.irf.com)

1. Avalanche failures assumption: Purely a thermal phenomenon and failure occurs at a temperature far in excess of T_{jmax}. This is validated for every part type.
2. Safe operation in Avalanche is allowed as long asT_{jmax} is not exceeded.
3. Equation below based on circuit and waveforms shown in Figures 12a, 12b.
4. $P_{D\ (ave)}$ = Average power dissipation per single avalanche pulse.
5. BV = Rated breakdown voltage (1.3 factor accounts for voltage increase during avalanche).
6. I_{av} = Allowable avalanche current.
7. ΔT = Allowable rise in junction temperature, not to exceed T_{jmax} (assumed as 25°C in Figure 15, 16).
   t_{av} = Average time in avalanche.
   D = Duty cycle in avalanche = $t_{av} \cdot f$
   $Z_{thJC}(D, t_{av})$ = Transient thermal resistance, see figure 11)

$$P_{D\ (ave)} = 1/2\ (\ 1.3 \cdot BV \cdot I_{av}) = \Delta T / Z_{thJC}$$
$$I_{av} = 2\Delta T / [1.3 \cdot BV \cdot Z_{th}]$$
$$E_{AS\ (AR)} = P_{D\ (ave)} \cdot t_{av}$$

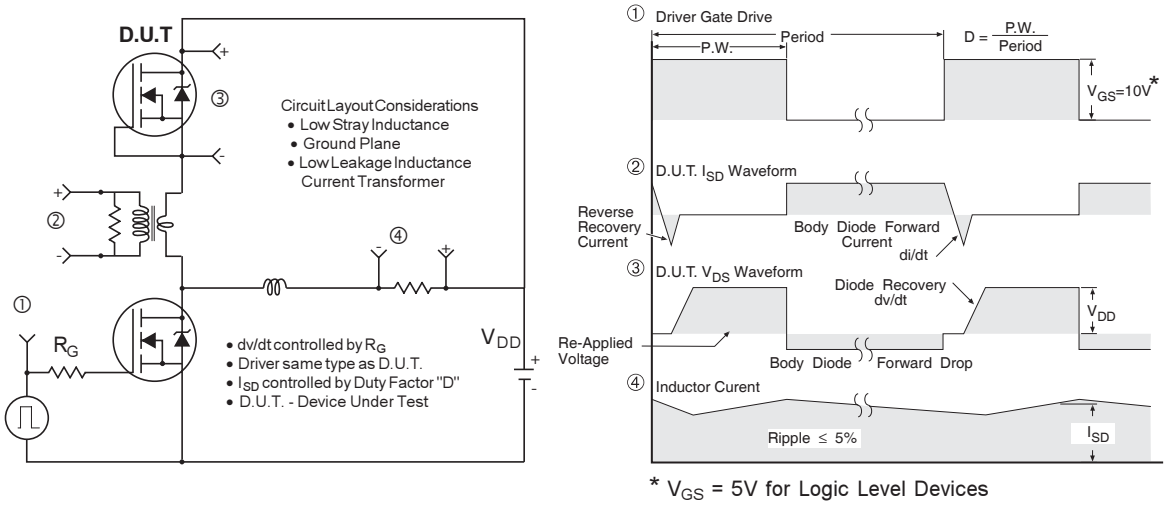

Fig 17. Peak Diode Recovery dv/dt Test Circuit for N-Channel HEXFET® Power MOSFETs

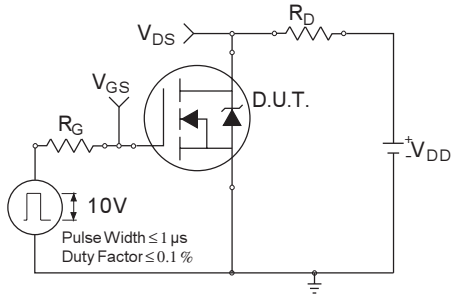

Fig 18a. Switching Time Test Circuit

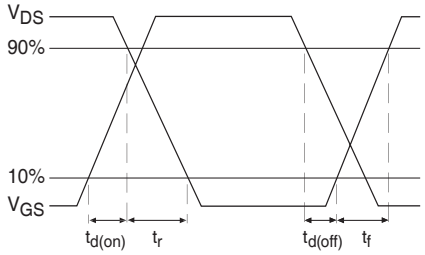

Fig 18b. Switching Time Waveforms

TO-220AB Package Outline(Dimensions are shown in millimeters (inches))

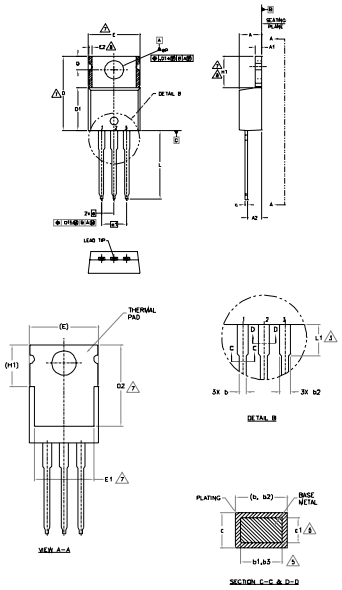

NOTES:
1.- DIMENSIONING AND TOLERANCING AS PER ASME Y14.5 M- 1994.
2.- DIMENSIONS ARE SHOWN IN INCHES [MILLIMETERS]
3.- LEAD DIMENSION AND FINISH UNCONTROLLED IN L1.
4.- DIMENSION D, D1 & E DO NOT INCLUDE MOLD FLASH. MOLD FLASH SHALL NOT EXCEED .005" (0.127) PER SIDE. THESE DIMENSIONS ARE MEASURED AT THE OUTERMOST EXTREMES OF THE PLASTIC BODY.
5.- DIMENSION b1, b3 & c1 APPLY TO BASE METAL ONLY.
6.- CONTROLLING DIMENSION : INCHES.
7.- THERMAL PAD CONTOUR OPTIONAL WITHIN DIMENSIONS E,H1,D2 & E1
8.- DIMENSION E2 x H1 DEFINE A ZONE WHERE STAMPING AND SINGULATION IRREGULARITIES ARE ALLOWED.
9.- OUTLINE CONFORMS TO JEDEC TO-220, EXCEPT A2 (max.) AND D2 (min.) WHERE DIMENSIONS ARE DERIVED FROM THE ACTUAL PACKAGE OUTLINE.

SYMBOL	DIMENSIONS				NOTES
	MILLIMETERS		INCHES		
	MIN.	MAX.	MIN.	MAX.	
A	3.56	4.83	.140	.190	
A1	0.51	1.40	.020	.055	
A2	2.03	2.92	.080	.115	
b	0.38	1.01	.015	.040	
b1	0.38	0.97	.015	.038	5
b2	1.14	1.78	.045	.070	
b3	1.14	1.73	.045	.068	5
c	0.36	0.61	.014	.024	
c1	0.36	0.56	.014	.022	5
D	14.22	16.51	.560	.650	4
D1	8.38	9.02	.330	.355	
D2	11.68	12.88	.460	.507	7
E	9.65	10.67	.380	.420	4,7
E1	6.86	8.89	.270	.350	7
E2	-	0.76	-	.030	8
e	2.54 BSC		.100 BSC		
e1	5.08 BSC		.200 BSC		
H1	5.84	6.86	.230	.270	7,8
L	12.70	14.73	.500	.580	
L1	3.56	4.06	.140	.160	3
øP	3.54	4.08	.139	.161	
Q	2.54	3.42	.100	.135	

LEAD ASSIGNMENTS

HEXFET
1.- GATE
2.- DRAIN
3.- SOURCE

IGBTs, CoPACK
1.- GATE
2.- COLLECTOR
3.- EMITTER

DIODES
1.- ANODE
2.- CATHODE
3.- ANODE

TO-220AB Part Marking Information

EXAMPLE: THIS IS AN IRF1010
LOT CODE 1789
ASSEMBLED ON WW 19, 2000
IN THE ASSEMBLY LINE "C"

Note: "P" in assembly line position indicates "Lead - Free"

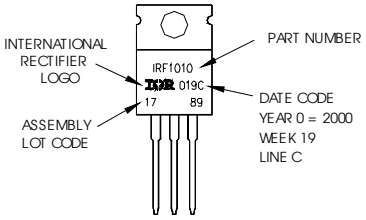

TO-220AB package is not recommended for Surface Mount Application.

Notes:

1. **For an Automotive Qualified version of this part please see http://www.irf.com/product-info/auto/**
2. **For the most current drawing please refer to IR website at http://www.irf.com/package/**

Data and specifications subject to change without notice.
This product has been designed and qualified for the Industrial market.
Qualification Standards can be found on IR's Web site.

International
IOR Rectifier

IR WORLD HEADQUARTERS: 233 Kansas St., El Segundo, California 90245, USA Tel: (310) 252-7105
TAC Fax: (310) 252-7903
Visit us at www.irf.com for sales contact information.07/2010

ENTEGRECİ

Bu belge www.entegreci.com üzerinden sunulmaktadır.

Elektronik komponent tedarikinde Entegreci

Entegreci, Eskişehir merkezli, Türkiye geneline satış yapan bir elektronik komponent mağazasıdır. Entegreler (IC), mikrodenetleyiciler, transistörler, diyotlar, pasif elemanlar, konnektörler, modüller ve geliştirme kartları tek adetten seri üretim adetlerine kadar satılır. Ürün sayfalarında güncel stok durumunu, fiyatı ve datasheet bağlantısını bulabilirsiniz.

Parça koduyla arama

Üretici parça numarasını yazın; stok ve fiyatı hemen görün.

www.entegreci.com

Ürün kategorileri

Entegreden kapasitöre tüm elektronik komponent kategorileri.

Kategorilere göz atın

Üreticiler

Aradığınız üreticinin ürünlerini tek sayfada inceleyin.

Üreticileri görün

Toplu alım ve teklif

Listede olmayan ya da yüksek adetli parçalar için teklif isteyin.

Teklif isteyin

www.entegreci.com | **destek@entegreci.com** | **0850 305 90 34**

Entegreci is an online electronic components store based in Türkiye. Search by manufacturer part number to see stock, prices and datasheets for integrated circuits, microcontrollers, transistors, passive components and connectors, or request a quote for parts that are not listed.

Bu sayfa Entegreci tarafından eklenmiştir. Belgenin önceki sayfaları asıl yayıncısına aittir ve içeriği değiştirilmemiştir; en güncel sürüm için belgenin yayıncısına başvurun.