International
IOR Rectifier

PD - 95485A

# IRF1407PbF

HEXFET® Power MOSFET

### Typical Applications
- Industrial Motor Drive

### Benefits
- Advanced Process Technology
- Ultra Low On-Resistance
- Dynamic dv/dt Rating
- 175°C Operating Temperature
- Fast Switching
- Repetitive Avalanche Allowed up to Tjmax

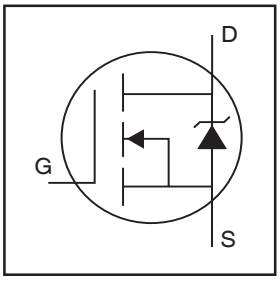


$V_{DSS}$ = 75V

$R_{DS(on)}$ = 0.0078Ω

$I_D$ = 130A⑥

### Description

This Stripe Planar design of HEXFET® Power MOSFETs utilizes the lastest processing techniques to achieve extremely low on-resistance per silicon area. Additional features of this HEXFET power MOSFET are a 175°C junction operating temperature, fast switching speed and improved repetitive avalanche rating. These benefits combine to make this design an extremely efficient and reliable device for use in a wide variety of applications.



TO-220AB

### Absolute Maximum Ratings

| | Parameter | Max. | Units |
|---|---|---|---|
| $I_D$ @ $T_C$ = 25°C | Continuous Drain Current, $V_{GS}$ @ 10V | 130⑥ | A |
| $I_D$ @ $T_C$ = 100°C | Continuous Drain Current, $V_{GS}$ @ 10V | 92⑥ | |
| $I_{DM}$ | Pulsed Drain Current ① | 520 | |
| $P_D$ @$T_C$ = 25°C | Power Dissipation | 330 | W |
| | Linear Derating Factor | 2.2 | W/°C |
| $V_{GS}$ | Gate-to-Source Voltage | ± 20 | V |
| $E_{AS}$ | Single Pulse Avalanche Energy② | 390 | mJ |
| $I_{AR}$ | Avalanche Current① | See Fig.12a, 12b, 15, 16 | A |
| $E_{AR}$ | Repetitive Avalanche Energy⑦ | | mJ |
| dv/dt | Peak Diode Recovery dv/dt ③ | 4.6 | V/ns |
| $T_J$ | Operating Junction and | -55 to + 175 | °C |
| $T_{STG}$ | Storage Temperature Range | | |
| | Soldering Temperature, for 10 seconds | 300 (1.6mm from case ) | |
| | Mounting Torque, 6-32 or M3 screw | 10 lbf•in (1.1N•m) | |

### Thermal Resistance

| | Parameter | Typ. | Max. | Units |
|---|---|---|---|---|
| $R_{\theta JC}$ | Junction-to-Case | — | 0.45 | °C/W |
| $R_{\theta CS}$ | Case-to-Sink, Flat, Greased Surface | 0.50 | — | |
| $R_{\theta JA}$ | Junction-to-Ambient | — | 62 | |

## Electrical Characteristics @ $T_J$ = 25°C (unless otherwise specified)

| | Parameter | Min. | Typ. | Max. | Units | Conditions |
|---|---|---|---|---|---|---|
| $V_{(BR)DSS}$ | Drain-to-Source Breakdown Voltage | 75 | — | — | V | $V_{GS}$ = 0V, $I_D$ = 250µA |
| $\Delta V_{(BR)DSS}/\Delta T_J$ | Breakdown Voltage Temp. Coefficient | — | 0.09 | — | V/°C | Reference to 25°C, $I_D$ = 1mA |
| $R_{DS(on)}$ | Static Drain-to-Source On-Resistance | — | — | 0.0078 | Ω | $V_{GS}$ = 10V, $I_D$ = 78A ④ |
| $V_{GS(th)}$ | Gate Threshold Voltage | 2.0 | — | 4.0 | V | $V_{DS}$ = 10V, $I_D$ = 250µA |
| $g_{fs}$ | Forward Transconductance | 74 | — | — | S | $V_{DS}$ = 25V, $I_D$ = 78A |
| $I_{DSS}$ | Drain-to-Source Leakage Current | — | — | 20 | µA | $V_{DS}$ = 75V, $V_{GS}$ = 0V |
| | | — | — | 250 | | $V_{DS}$ = 60V, $V_{GS}$ = 0V, $T_J$ = 150°C |
| $I_{GSS}$ | Gate-to-Source Forward Leakage | — | — | 200 | nA | $V_{GS}$ = 20V |
| | Gate-to-Source Reverse Leakage | — | — | -200 | | $V_{GS}$ = -20V |
| $Q_g$ | Total Gate Charge | — | 160 | 250 | nC | $I_D$ = 78A |
| $Q_{gs}$ | Gate-to-Source Charge | — | 35 | 52 | | $V_{DS}$ = 60V |
| $Q_{gd}$ | Gate-to-Drain ("Miller") Charge | — | 54 | 81 | | $V_{GS}$ = 10V④ |
| $t_{d(on)}$ | Turn-On Delay Time | — | 11 | — | ns | $V_{DD}$ = 38V |
| $t_r$ | Rise Time | — | 150 | — | | $I_D$ = 78A |
| $t_{d(off)}$ | Turn-Off Delay Time | — | 150 | — | | $R_G$ = 2.5Ω |
| $t_f$ | Fall Time | — | 140 | — | | $V_{GS}$ = 10V ④ |
| $L_D$ | Internal Drain Inductance | — | 4.5 | — | nH | Between lead, 6mm (0.25in.) from package and center of die contact |
| $L_S$ | Internal Source Inductance | — | 7.5 | — | | |
| $C_{iss}$ | Input Capacitance | — | 5600 | — | pF | $V_{GS}$ = 0V |
| $C_{oss}$ | Output Capacitance | — | 890 | — | | $V_{DS}$ = 25V |
| $C_{rss}$ | Reverse Transfer Capacitance | — | 190 | — | | $f$ = 1.0KHz, See Fig. 5 |
| $C_{oss}$ | Output Capacitance | — | 5800 | — | | $V_{GS}$ = 0V, $V_{DS}$ = 1.0V, $f$ = 1.0KHz |
| $C_{oss}$ | Output Capacitance | — | 560 | — | | $V_{GS}$ = 0V, $V_{DS}$ = 60V, $f$ = 1.0KHz |
| $C_{oss}$ eff. | Effective Output Capacitance ⑤ | — | 1100 | — | | $V_{GS}$ = 0V, $V_{DS}$ = 0V to 60V |

## Source-Drain Ratings and Characteristics

| | Parameter | Min. | Typ. | Max. | Units | Conditions |
|---|---|---|---|---|---|---|
| $I_S$ | Continuous Source Current (Body Diode) | — | — | 130⑥ | A | MOSFET symbol showing the integral reverse p-n junction diode. |
| $I_{SM}$ | Pulsed Source Current (Body Diode) ① | — | — | 520 | | |
| $V_{SD}$ | Diode Forward Voltage | — | — | 1.3 | V | $T_J$ = 25°C, $I_S$ = 78A, $V_{GS}$ = 0V ④ |
| $t_{rr}$ | Reverse Recovery Time | — | 110 | 170 | ns | $T_J$ = 25°C, $I_F$ = 78A |
| $Q_{rr}$ | Reverse RecoveryCharge | — | 390 | 590 | nC | di/dt = 100A/µs ④ |
| $t_{on}$ | Forward Turn-On Time | Intrinsic turn-on time is negligible (turn-on is dominated by $L_S$+$L_D$) | | | | |

**Notes:**

① Repetitive rating; pulse width limited by max. junction temperature. (See fig. 11).

② Starting $T_J$ = 25°C, L = 0.13mH $R_G$ = 25Ω, $I_{AS}$ = 78A. (See Figure 12).

③ $I_{SD}$ ≤ 78A, di/dt ≤ 320A/µs, $V_{DD}$ ≤ $V_{(BR)DSS}$, $T_J$ ≤ 175°C

④ Pulse width ≤ 400µs; duty cycle ≤ 2%.

⑤ $C_{oss}$ eff. is a fixed capacitance that gives the same charging time as $C_{oss}$ while $V_{DS}$ is rising from 0 to 80% $V_{DSS}$ .

⑥ Calculated continuous current based on maximum allowable junction temperature. Package limitation current is 75A.

⑦ Limited by $T_{Jmax}$ , see Fig.12a, 12b, 15, 16 for typical repetitive avalanche performance.

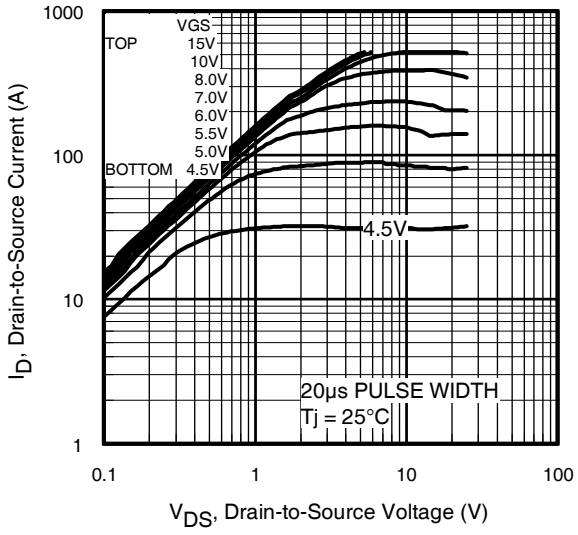


**Fig 1.** Typical Output Characteristics

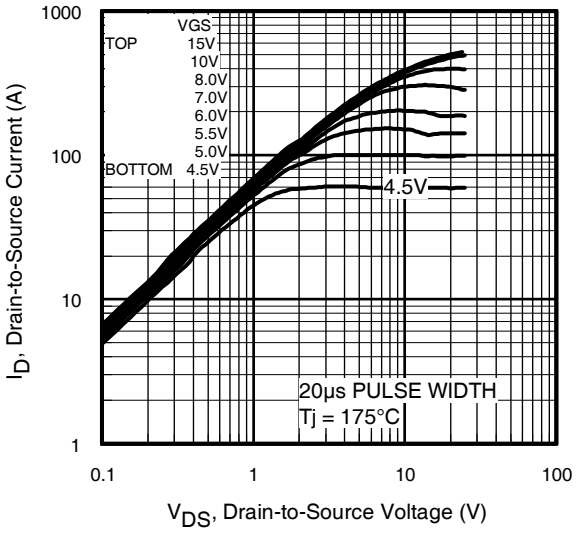


**Fig 2.** Typical Output Characteristics

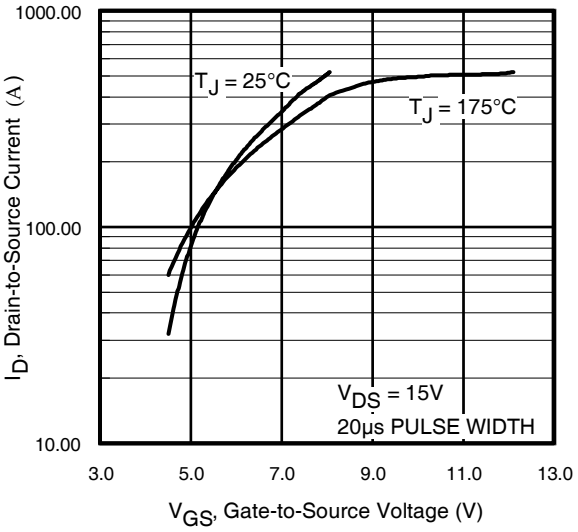


**Fig 3.** Typical Transfer Characteristics

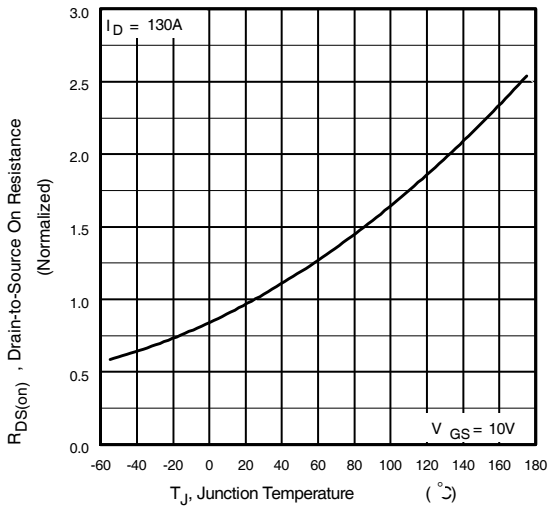


**Fig 4.** Normalized On-Resistance vs. Temperature

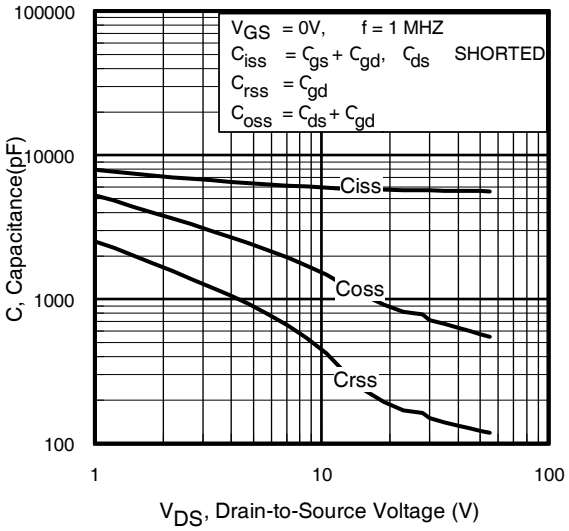


**Fig 5.** Typical Capacitance vs. Drain-to-Source Voltage

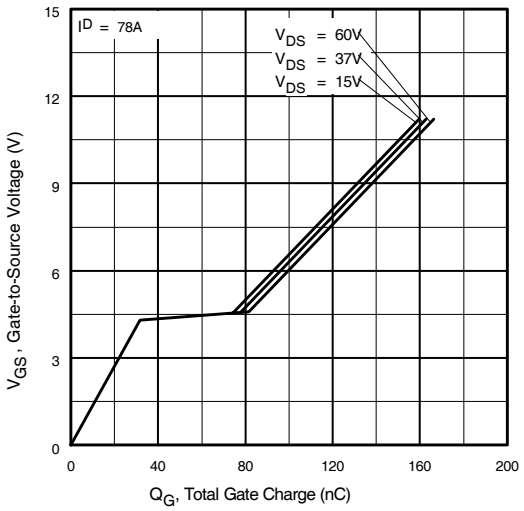


**Fig 6.** Typical Gate Charge vs. Gate-to-Source Voltage

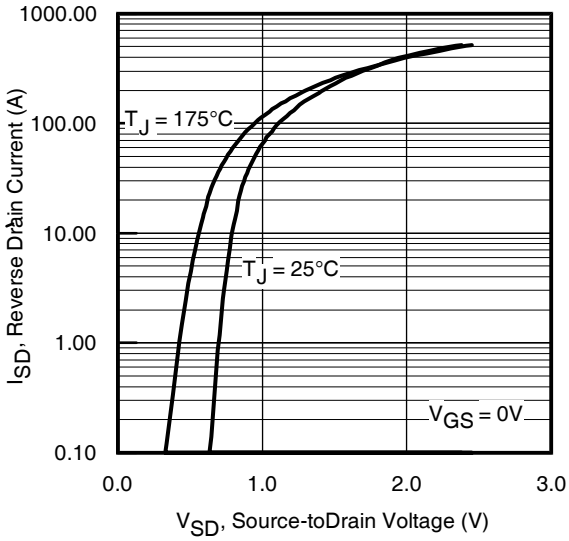


**Fig 7.** Typical Source-Drain Diode Forward Voltage

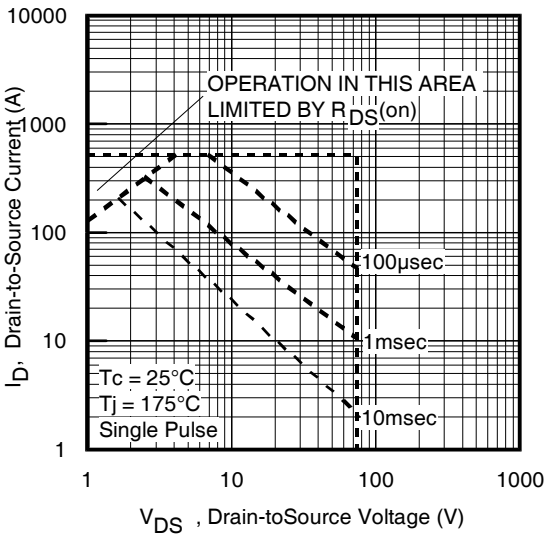


**Fig 8.** Maximum Safe Operating Area

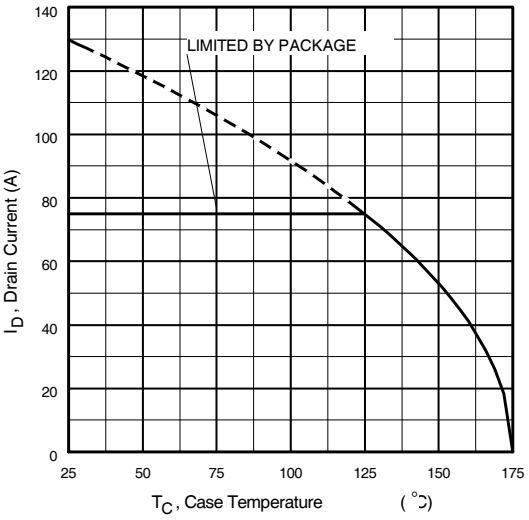


**Fig 9.** Maximum Drain Current vs. Case Temperature

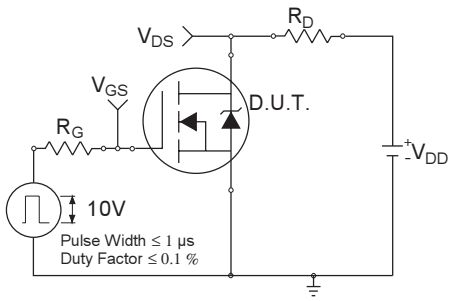


**Fig 10a.** Switching Time Test Circuit

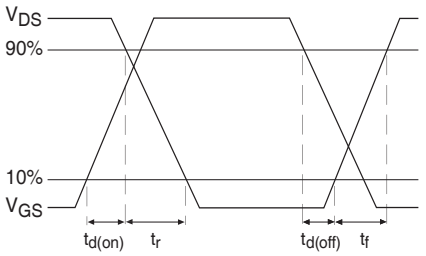


**Fig 10b.** Switching Time Waveforms

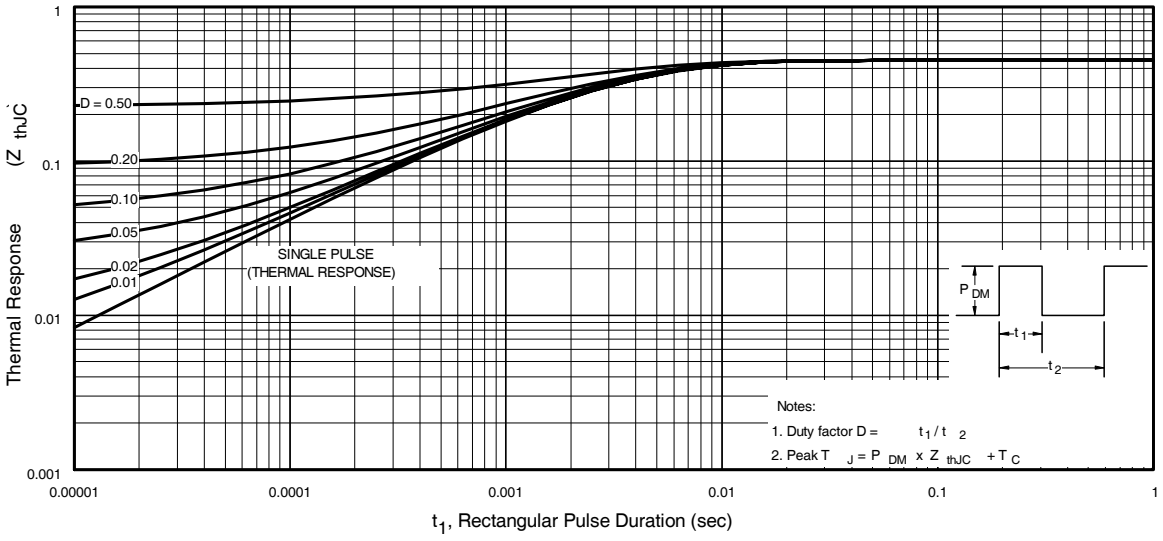


**Fig 11.** Maximum Effective Transient Thermal Impedance, Junction-to-Case

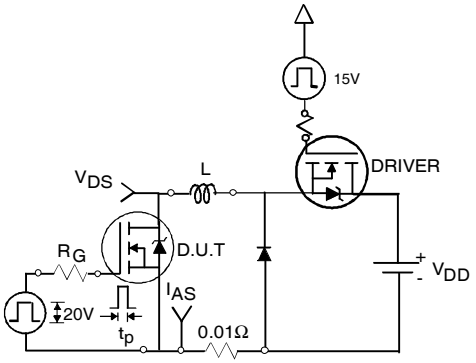


**Fig 12a.** Unclamped Inductive Test Circuit

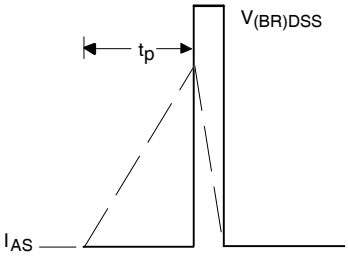


**Fig 12b.** Unclamped Inductive Waveforms

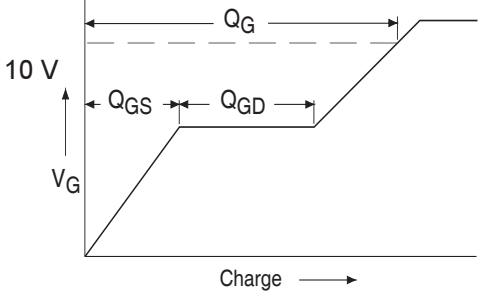


**Fig 13a.** Basic Gate Charge Waveform

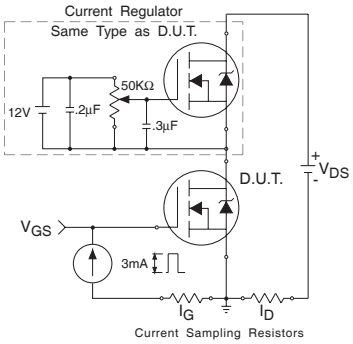


**Fig 13b.** Gate Charge Test Circuit

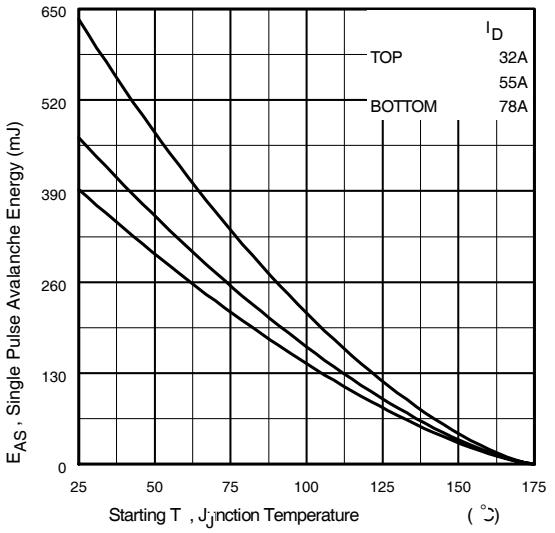


**Fig 12c.** Maximum Avalanche Energy vs. Drain Current

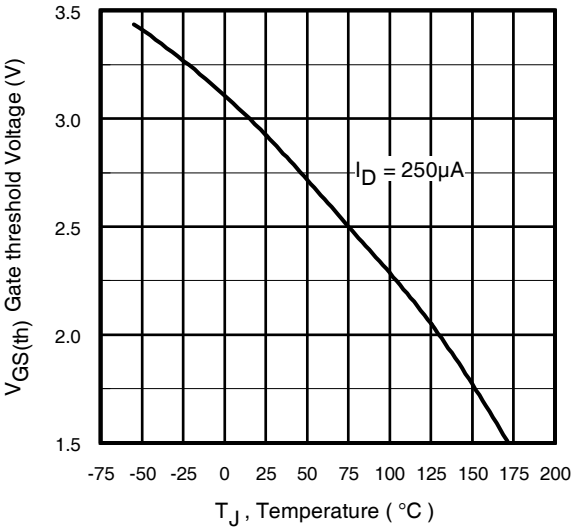


**Fig 14.** Threshold Voltage vs. Temperature

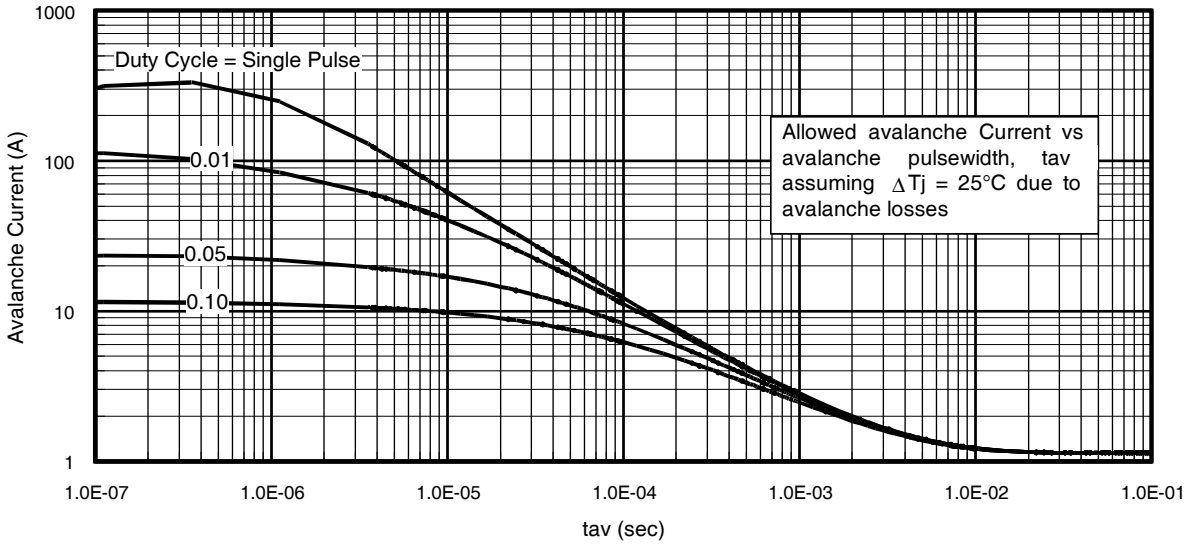


**Fig 15.** Typical Avalanche Current vs.Pulsewidth

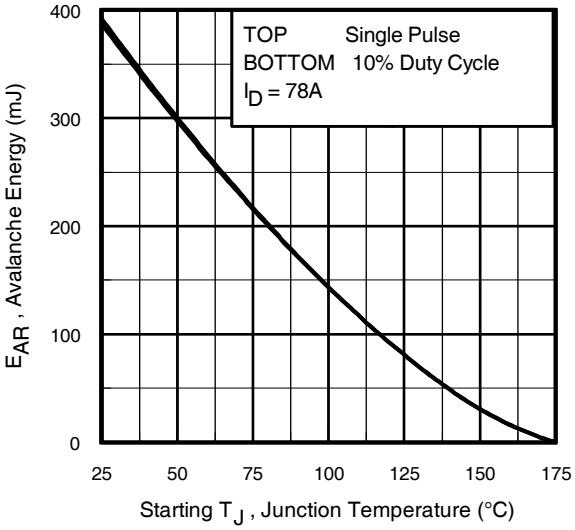


**Fig 16.** Maximum Avalanche Energy vs. Temperature

**Notes on Repetitive Avalanche Curves , Figures 15, 16: (For further info, see AN-1005 at www.irf.com)**

1. Avalanche failures assumption: Purely a thermal phenomenon and failure occurs at a temperature far in excess of $T_{jmax}$. This is validated for every part type.
2. Safe operation in Avalanche is allowed as long as$T_{jmax}$ is not exceeded.
3. Equation below based on circuit and waveforms shown in Figures 12a, 12b.
4. $P_{D\ (ave)}$ = Average power dissipation per single avalanche pulse.
5. BV = Rated breakdown voltage (1.3 factor accounts for voltage increase during avalanche).
6. $I_{av}$ = Allowable avalanche current.
7. $\Delta T$ = Allowable rise in junction temperature, not to exceed $T_{jmax}$ (assumed as 25°C in Figure 15, 16).
   $t_{av}$ = Average time in avalanche.
   D = Duty cycle in avalanche = $t_{av} \cdot f$
   $Z_{thJC}(D, t_{av})$ = Transient thermal resistance, see figure 11)

$$P_{D\ (ave)} = 1/2\ (1.3 \cdot BV \cdot I_{av}) = \Delta T / Z_{thJC}$$
$$I_{av} = 2\Delta T / [1.3 \cdot BV \cdot Z_{th}]$$
$$E_{AS\ (AR)} = P_{D\ (ave)} \cdot t_{av}$$

## Peak Diode Recovery dv/dt Test Circuit

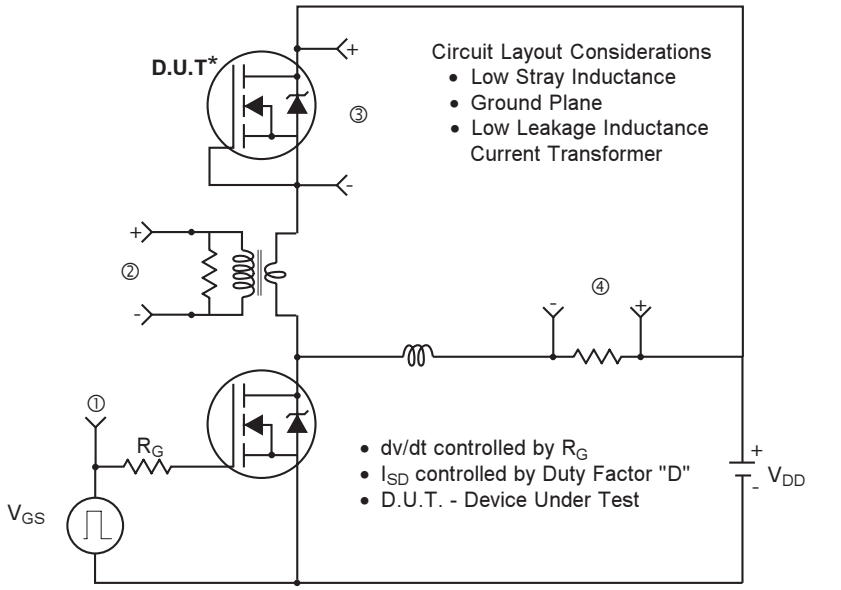


* Reverse Polarity of D.U.T for P-Channel

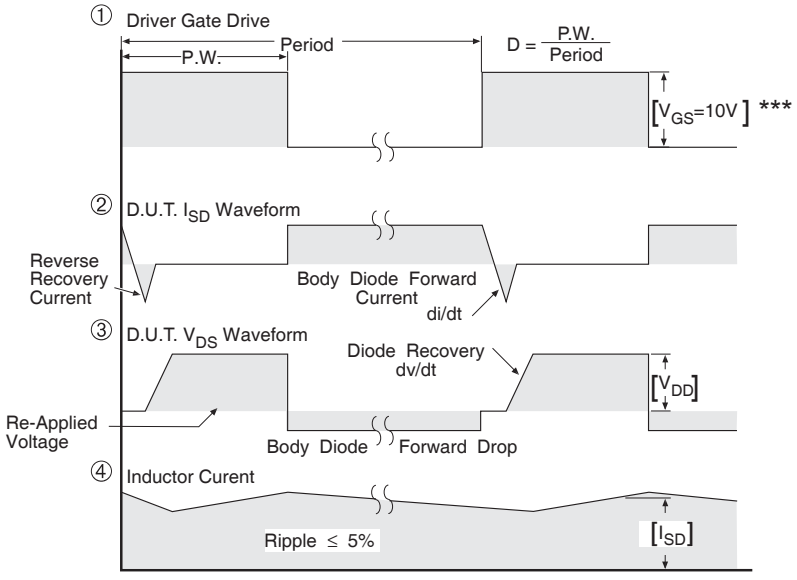


*** $V_{GS}$ = 5.0V for Logic Level and 3V Drive Devices

**Fig 17.** For N-channel HEXFET® power MOSFETs

## TO-220AB Package Outline

Dimensions are shown in millimeters (inches)

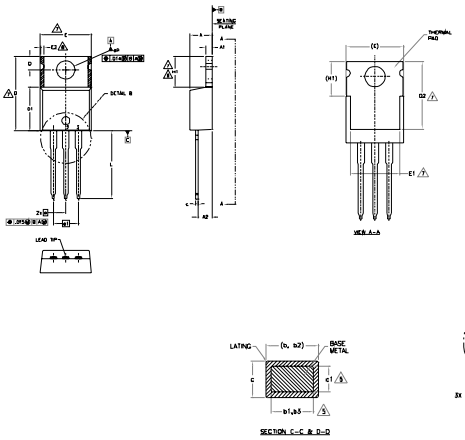

NOTES:
1.- DIMENSIONING AND TOLERANCING AS PER ASME Y14.5 M- 1994.
2.- DIMENSIONS ARE SHOWN IN INCHES [MILLIMETERS].
3.- LEAD DIMENSION AND FINISH UNCONTROLLED IN L1.
4.- DIMENSION D, D1 & E DO NOT INCLUDE MOLD FLASH. MOLD FLASH SHALL NOT EXCEED .005" (0.127) PER SIDE. THESE DIMENSIONS ARE MEASURED AT THE OUTERMOST EXTREMES OF THE PLASTIC BODY.
⚠ DIMENSION b1, b3 & c1 APPLY TO BASE METAL ONLY.
6.- CONTROLLING DIMENSION : INCHES.
7.- THERMAL PAD CONTOUR OPTIONAL WITHIN DIMENSIONS E,H1,D2 & E1
8.- DIMENSION E2 X H1 DEFINE A ZONE WHERE STAMPING AND SINGULATION IRREGULARITIES ARE ALLOWED.
9.- OUTLINE CONFORMS TO JEDEC TO-220, EXCEPT A2 (max.) AND D2 (min.) WHERE DIMENSIONS ARE DERIVED FROM THE ACTUAL PACKAGE OUTLINE.

| SYMBOL | DIMENSIONS | | | | NOTES |
|---|---|---|---|---|---|
| | MILLIMETERS | | INCHES | | |
| | MIN. | MAX. | MIN. | MAX. | |
| A | 3.56 | 4.83 | .140 | .190 | |
| A1 | 0.51 | 1.40 | .020 | .055 | |
| A2 | 2.03 | 2.92 | .080 | .115 | |
| b | 0.38 | 1.01 | .015 | .040 | |
| b1 | 0.38 | 0.97 | .015 | .038 | 5 |
| b2 | 1.14 | 1.78 | .045 | .070 | |
| b3 | 1.14 | 1.73 | .045 | .068 | 5 |
| c | 0.36 | 0.61 | .014 | .024 | |
| c1 | 0.36 | 0.56 | .014 | .022 | 5 |
| D | 14.22 | 16.51 | .560 | .650 | 4 |
| D1 | 8.38 | 9.02 | .330 | .355 | |
| D2 | 11.68 | 12.88 | .460 | .507 | 7 |
| E | 9.65 | 10.67 | .380 | .420 | 4,7 |
| E1 | 6.86 | 8.89 | .270 | .350 | 7 |
| E2 | – | 0.76 | – | .030 | 8 |
| e | 2.54 BSC | | .100 BSC | | |
| e1 | 5.08 BSC | | .200 BSC | | |
| H1 | 5.84 | 6.86 | .230 | .270 | 7,8 |
| L | 12.70 | 14.73 | .500 | .580 | |
| L1 | 3.56 | 4.06 | .140 | .160 | 3 |
| øP | 3.54 | 4.08 | .139 | .161 | |
| Q | 2.54 | 3.42 | .100 | .135 | |

LEAD ASSIGNMENTS

HEXFET
1.- GATE
2.- DRAIN
3.- SOURCE

IGBTs, CoPACK
1.- GATE
2.- COLLECTOR
3.- EMITTER

DIODES
1.- ANODE
2.- CATHODE
3.- ANODE

## TO-220AB Part Marking Information

EXAMPLE: THIS IS AN IRF1010
LOT CODE 1789
ASSEMBLED ON WW 19, 2000
IN THE ASSEMBLY LINE "C"

Note: "P" in assembly line position indicates "Lead - Free"

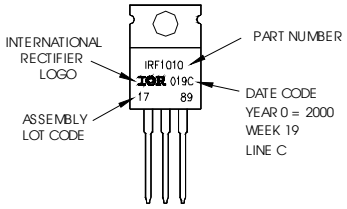


**TO-220 package is not recommended for Surface Mount Application.**

**Notes:**
**1. For an Automotive Qualified version of this part please see http://www.irf.com/product-info/auto/**
**2. For the most current drawing please refer to IR website at http://www.irf.com/package/**

Data and specifications subject to change without notice.
This product has been designed and qualified for the Industrial market.
Qualification Standards can be found on IR's Web site.

International
IOR Rectifier

**IR WORLD HEADQUARTERS:** 233 Kansas St., El Segundo, California 90245, USA Tel: (310) 252-7105
TAC Fax: (310) 252-7903
Visit us at www.irf.com for sales contact information.07/2010

ENTEGRECİ

Bu belge www.entegreci.com üzerinden sunulmaktadır.

# Elektronik komponent tedarikinde Entegreci

Entegreci, Eskişehir merkezli, Türkiye geneline satış yapan bir elektronik komponent mağazasıdır. Entegreler (IC), mikrodenetleyiciler, transistörler, diyotlar, pasif elemanlar, konnektörler, modüller ve geliştirme kartları tek adetten seri üretim adetlerine kadar satılır. Ürün sayfalarında güncel stok durumunu, fiyatı ve datasheet bağlantısını bulabilirsiniz.

### Parça koduyla arama

Üretici parça numarasını yazın; stok ve fiyatı hemen görün.

**www.entegreci.com**

### Ürün kategorileri

Entegreden kapasitöre tüm elektronik komponent kategorileri.

**Kategorilere göz atın**

### Üreticiler

Aradığınız üreticinin ürünlerini tek sayfada inceleyin.

**Üreticileri görün**

### Toplu alım ve teklif

Listede olmayan ya da yüksek adetli parçalar için teklif isteyin.

**Teklif isteyin**

**www.entegreci.com** | **destek@entegreci.com** | **0850 305 90 34**

Entegreci is an online electronic components store based in Türkiye. Search by manufacturer part number to see stock, prices and datasheets for integrated circuits, microcontrollers, transistors, passive components and connectors, or request a quote for parts that are not listed.

Bu sayfa Entegreci tarafından eklenmiştir. Belgenin önceki sayfaları asıl yayıncısına aittir ve içeriği değiştirilmemiştir; en güncel sürüm için belgenin yayıncısına başvurun.