MOSFET

Metal Oxide Semiconductor Field Effect Transistor

CoolMOS™ CFD2 650V

650V CoolMOS™ CFD2 Power Transistor
IPW65R080CFD

Data Sheet

Rev. 2.4
Final

Industrial & Multimarket

1 Description

CoolMOS™ is a revolutionary technology for high voltage power MOSFETs, designed according to the superjunction (SJ) principle and pioneered by Infineon Technologies. 650V CoolMOS™ CFD2 series combines the experience of the leading SJ MOSFET supplier with high class innovation. The resulting devices provide all benefits of a fast switching SJ MOSFET while offering an extremely fast and robust body diode. This combination of extremely low switching, commutation and conduction losses together with highest robustness make especially resonant switching applications more reliable, more efficient, lighter and cooler.

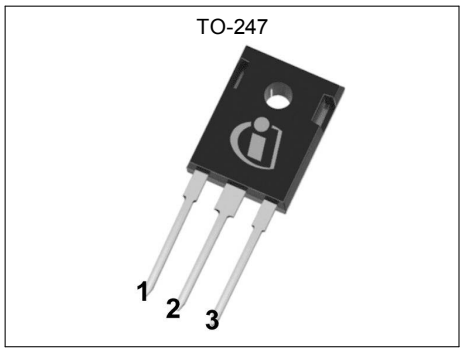

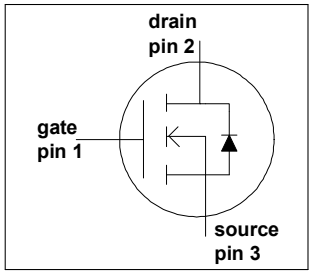

Features

- Ultra-fast body diode
- Very high commutation ruggedness
- Extremely low losses due to very low FOM Rdson*Qg and Eoss
- Easy to use/drive
- Pb-free plating, Halogen free mold compound
- Qualified for industrial grade applications according to JEDEC (J-STD20 and JESD22)

Applications

650V CoolMOS™ CFD2 is especially suitable for resonant switching PWM stages for e.g. PC Silverbox, LCD TV, Lighting, Server,Telecom and Solar.

Table 1 Key Performance Parameters

Parameter	Value	Unit
V_{DS} @ $T_{j\ max}$	700	V
RDS(on),max	0.08	Ω
Qg,typ	167	nC
ID,pulse	137	A
Eoss @ 400V	12.5	µJ
Body diode di/dt	900	A/µs
Qrr	1	µC
trr	180	ns
Irrm	10	A

Type / Ordering Code	Package	Marking	Related Links
IPW65R080CFD	PG-TO 247	65F6080	see Appendix A

Table of Contents

Description 2
Table of Contents 3
Maximum ratings 4
Thermal characteristics 5
Electrical characteristics 6
Electrical characteristics diagrams 8
Test Circuits 12
Package Outlines 13
Appendix A 14
Revision History 15
Disclaimer 15

2 Maximum ratings

at T_j = 25°C, unless otherwise specified

Table 2 Maximum ratings

Parameter	Symbol	Values			Unit	Note / Test Condition
		Min.	Typ.	Max.		
Continuous drain current[1]	I_D			43.3	A	T_C = 25°C
				27.4		T_C = 100°C
Pulsed drain current[2]	$I_{D,pulse}$			137	A	T_C = 25°C
Avalanche energy, single pulse	E_{AS}			1160	mJ	I_D = 8.7A, V_{DD} = 50V
Avalanche energy, repetitive	E_{AR}			1.76	mJ	I_D = 8.7A, V_{DD} = 50V
Avalanche current, repetitive	I_{AR}			8.7	A	
MOSFET dv/dt ruggedness	dv/dt			50	V/ns	V_{DS} = 0 ... 400V
Gate source voltage	V_{GS}	-20		20	V	static
		-30		30		AC (f > 1 Hz)
Power dissipation (non FullPAK) TO-247	P_{tot}			391.0	W	T_C = 25°C
Operating and storage temperature	T_j, T_{stg}	-55		150	°C	
Mounting torque (non FullPAK) TO-247				60	Ncm	M3 and M3.5 screws
Continuous diode forward current	I_S			43.3	A	T_C = 25°C
Diode pulse current	$I_{S,pulse}$			140	A	T_C = 25°C
Reverse diode dv/dt[3]	dv/dt			50	V/ns	V_{DS} = 0 ... 400V, $I_{SD} \le I_D$, T_j = 25°C
Maximum diode commutation speed	di_f/dt			900	A/µs	

[1] Limited by $T_{j\,max}$.
[2] Pulse width t_p limited by $T_{j\,max}$
[3] $V_{peak}<V_{(BR)DSS}$, $T_j<T_{j\,max}$, identical low and high side switch with same Rg

3 Thermal characteristics

Table 3 Thermal characteristics TO-247

Parameter	Symbol	Values			Unit	Note / Test Condition
		Min.	Typ.	Max.		
Thermal resistance, junction - case	R_{thJC}			0.32	°C/W	
Thermal resistance, junction - ambient	R_{thJA}			62	°C/W	leaded
Soldering temperature, wavesoldering only allowed at leads	T_{sold}			260	°C	1.6 mm (0.063 in.) from case for 10s

4 Electrical characteristics

at T_j = 25°C, unless otherwise specified

Table 4 Static characteristics

Parameter	Symbol	Values			Unit	Note / Test Condition
		Min.	Typ.	Max.		
Drain-source breakdown voltage	$V_{(BR)DSS}$	650			V	V_{GS} = 0V, I_D = 1mA
Gate threshold voltage	$V_{GS(th)}$	3.5	4	4.5	V	V_{DS} = V_{GS}, I_D = 1.8mA
Zero gate voltage drain current	I_{DSS}			2	µA	V_{DS} = 650V, V_{GS} = 0V, T_j = 25°C
			500			V_{DS} = 650V, V_{GS} = 0V, T_j = 150°C
Gate-source leakage current	I_{GSS}			100	nA	V_{GS} = 20V, V_{DS} = 0V
Drain-source on-state resistance	$R_{DS(on)}$		0.072	0.08	Ω	V_{GS} = 10V, I_D = 17.6A, T_j = 25°C
			0.187			V_{GS} = 10V, I_D = 17.6A, T_j = 150°C
Gate resistance	R_G		0.7		Ω	f = 1MHz, open drain

Table 5 Dynamic characteristics

Parameter	Symbol	Values			Unit	Note / Test Condition
		Min.	Typ.	Max.		
Input capacitance	C_{iss}		5030		pF	V_{GS} = 0V, V_{DS} = 100V, f = 1MHz
Output capacitance	C_{oss}		215		pF	
Effective output capacitance, energy related[1)]	$C_{o(er)}$		158		pF	V_{GS} = 0V, V_{DS} = 0 ... 400V
Effective output capacitance, time related[2)]	$C_{o(tr)}$		794		pF	I_D = constant, V_{GS} = 0V, V_{DS} = 0 ... 400V
Turn-on delay time	$t_{d(on)}$		20		ns	V_{DD} = 400V, V_{GS} = 13V, I_D = 26.3A, R_G = 1.8Ω
Rise time	t_r		18		ns	
Turn-off delay time	$t_{d(off)}$		85		ns	
Fall time	t_f		6		ns	

Table 6 Gate charge characteristics

Parameter	Symbol	Values			Unit	Note / Test Condition
		Min.	Typ.	Max.		
Gate to source charge	Q_{gs}		32		nC	V_{DD} = 480V, I_D = 26.3A, V_{GS} = 0 to 10V
Gate to drain charge	Q_{gd}		87		nC	
Gate charge total	Q_g		167		nC	
Gate plateau voltage	$V_{plateau}$		6.4		V	

[1)] $C_{o(er)}$ is a fixed capacitance that gives the same stored energy as C_{oss} while V_{DS} is rising from 0 to 400V

[2)] $C_{o(tr)}$ is a fixed capacitance that gives the same charging time as C_{oss} while V_{DS} is rising from 0 to 400V

Table 7 Reverse diode characteristics

Parameter	Symbol	Values			Unit	Note / Test Condition
		Min.	Typ.	Max.		
Diode forward voltage	V_{SD}		0.9		V	V_{GS} = 0V, I_F = 26.3A, T_j = 25°C
Reverse recovery time	t_{rr}		180		ns	V_R = 400V, I_F = 26.3A, dI_F/dt = 100A/µs
Reverse recovery charge	Q_{rr}		1		µC	
Peak reverse recovery current	I_{rrm}		10		A	

5 Electrical characteristics diagrams

Table 8

Power dissipation (Non FullPAK)	Max. transient thermal impedance (Non FullPAK)
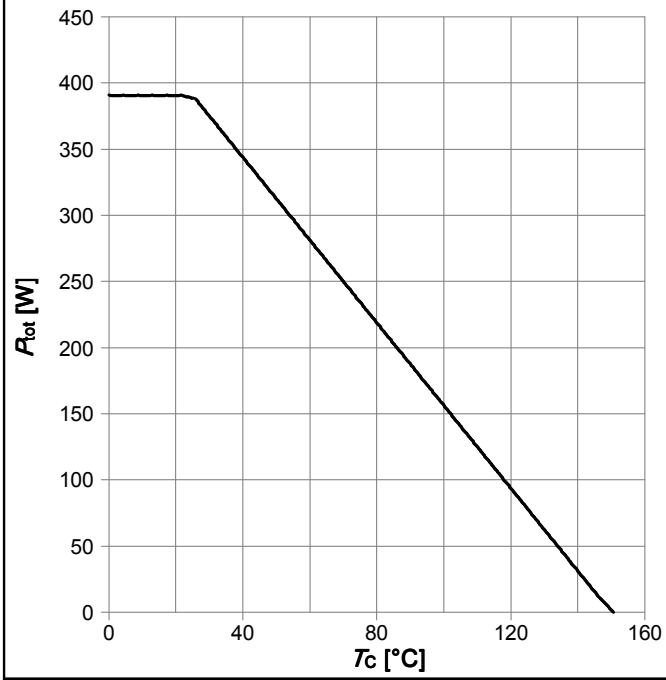	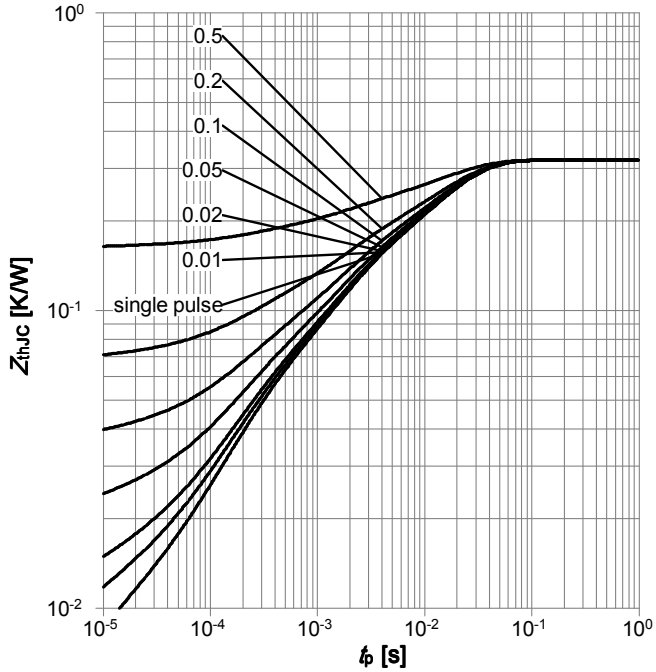
$P_{tot}=f(T_C)$	$Z_{thJC}=f(t_P)$; parameter: $D=t_p/T$

Table 9

Safe operating area T_C=25°C (Non FullPAK)	Safe operating area T_C=80°C (Non FullPAK)
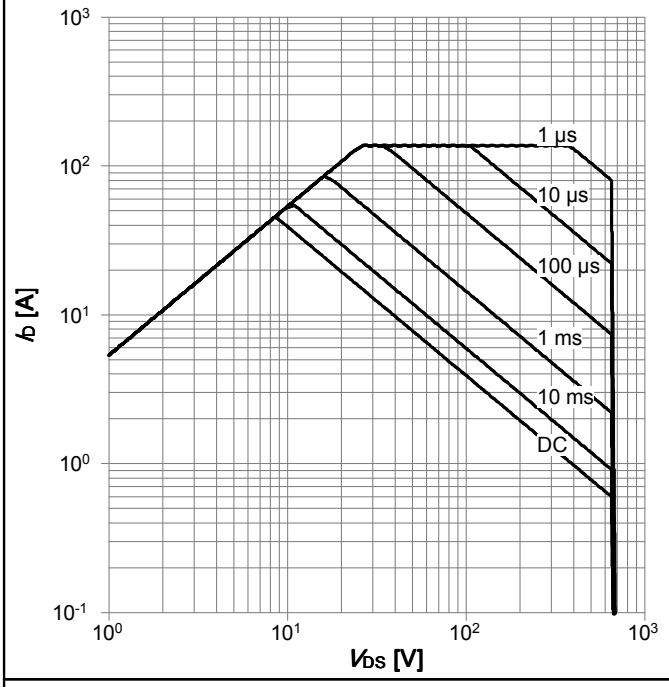	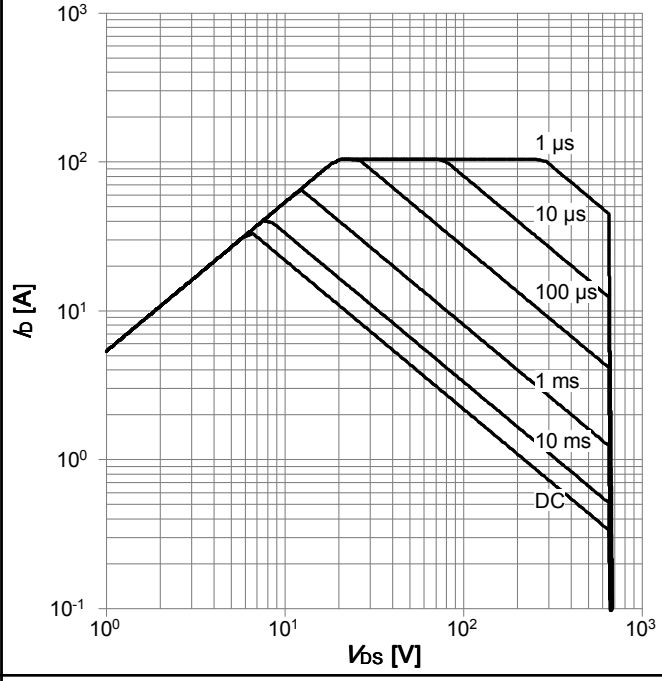
$I_D=f(V_{DS})$; T_C=25 °C; Vgs>7,5V; D=0; parameter: t_p	$I_D=f(V_{DS})$; Vgs>7,5V; T_C=80 °C; D=0; parameter: t_p

Table 10

Typ. output characteristics T_C=25°C	Typ. output characteristics T_C=125°C
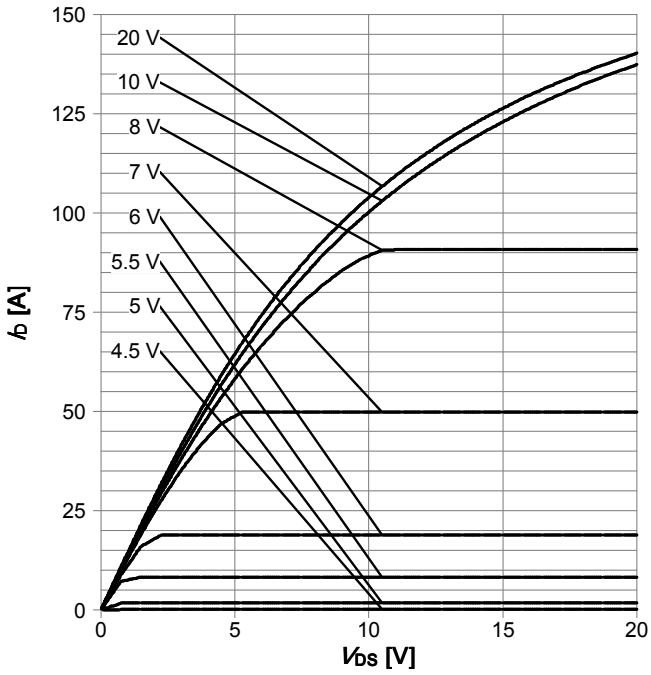	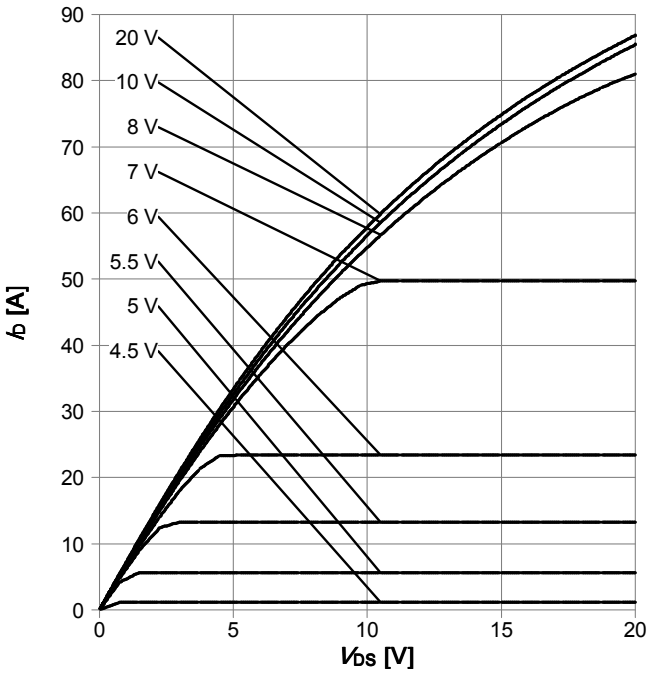
I_D=f(V_{DS}); T_j=25 °C; parameter: V_{GS}	I_D=f(V_{DS}); T_j=125 °C; parameter: V_{GS}

Table 11

Typ. drain-source on-state resistance	Drain-source on-state resistance
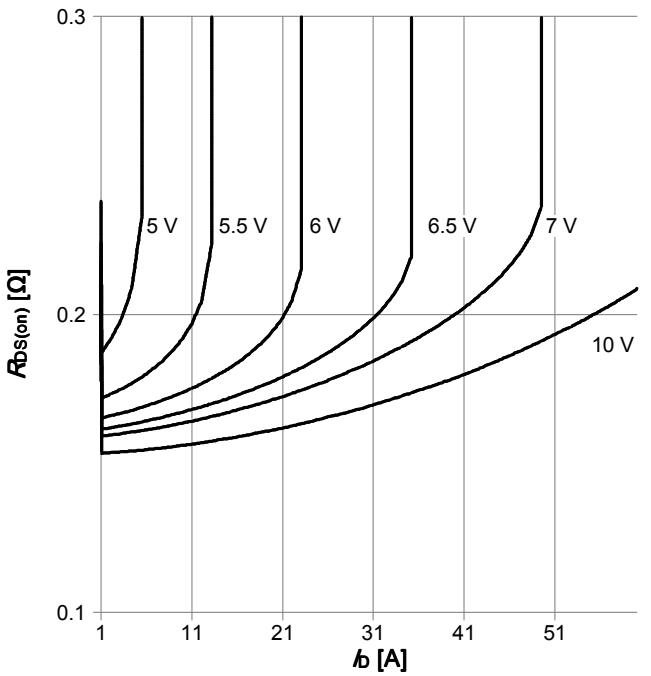	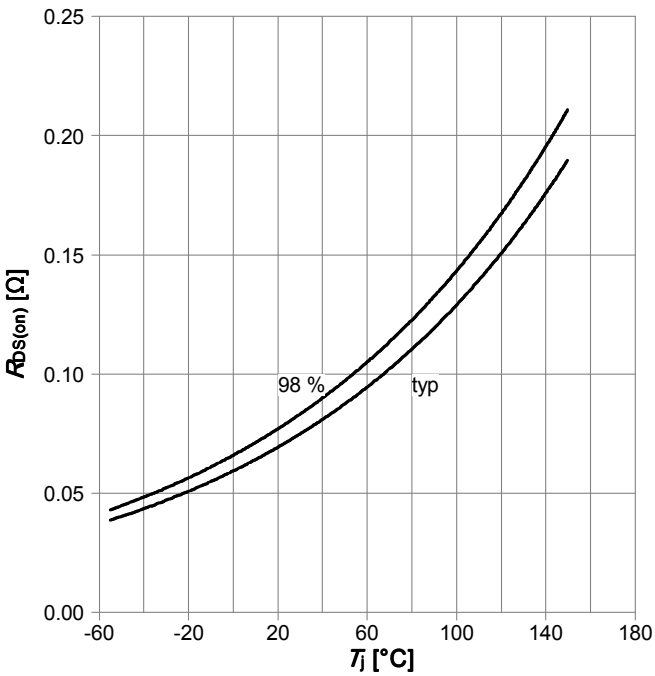
$R_{DS(on)}$=f(I_D); T_j=125 °C; parameter: V_{GS}	$R_{DS(on)}$=f(T_j); I_D=17.6A; V_{GS}=10 V

Table 12

Typ. transfer characteristics	Typ. gate charge
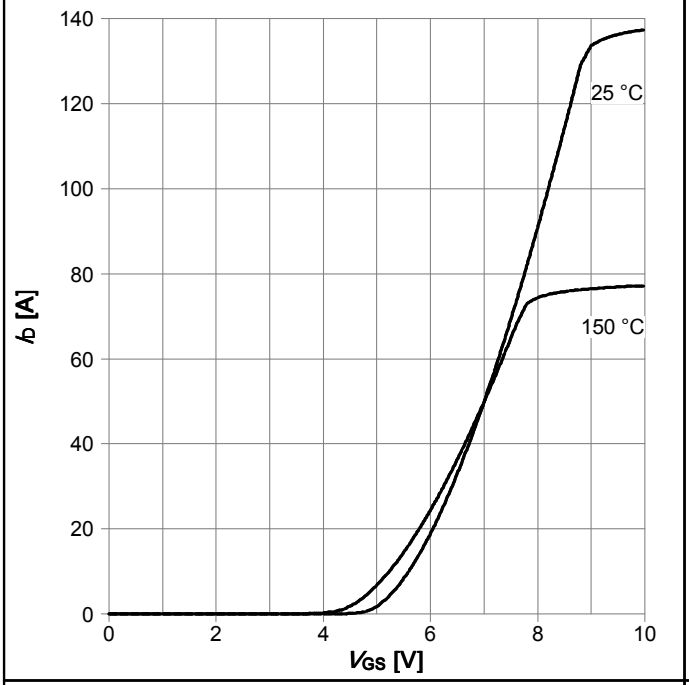	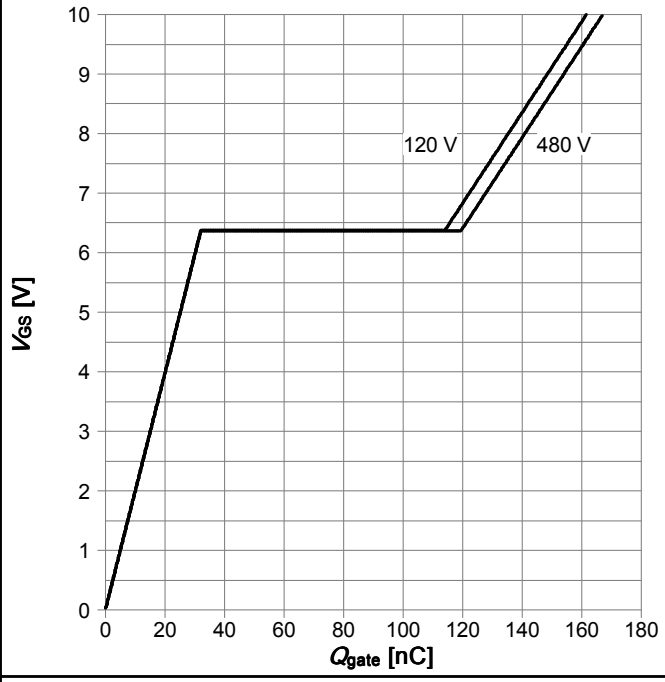
I_D=f(V_{GS}); |V_{DS}|=20V;	V_{GS}=f(Q_{gate}); I_D=26.3 A pulsed; parameter: V_{DD}

Table 13

Avalanche energy	Drain-source breakdown voltage
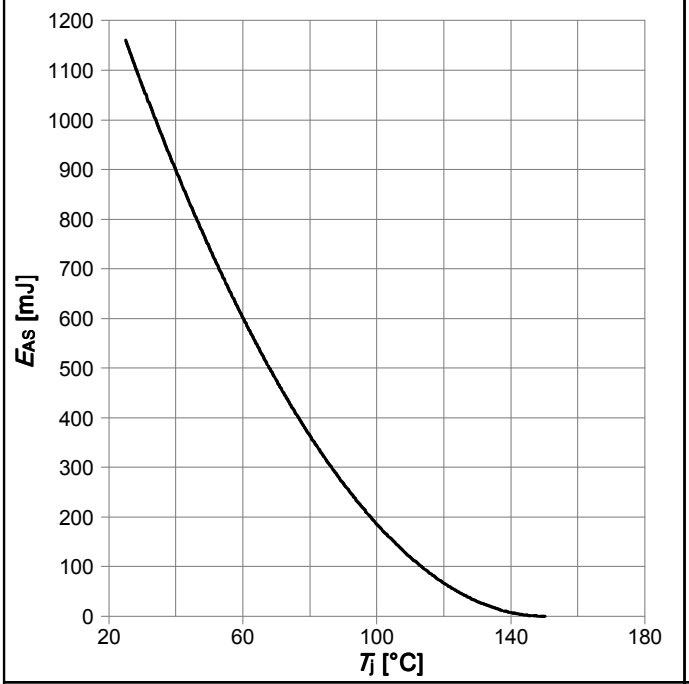	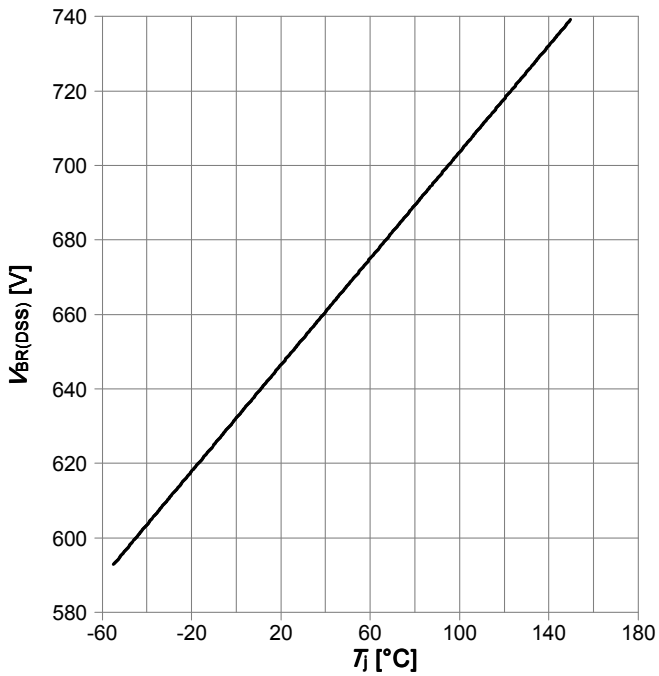
E_{AS}=f(T_j); I_D=8.7 A; V_{DD}=50 V	$V_{BR(DSS)}$=f(T_j); I_D=10 mA

Table 14

Typ. capacitances	Typ. C_{oss} stored energy
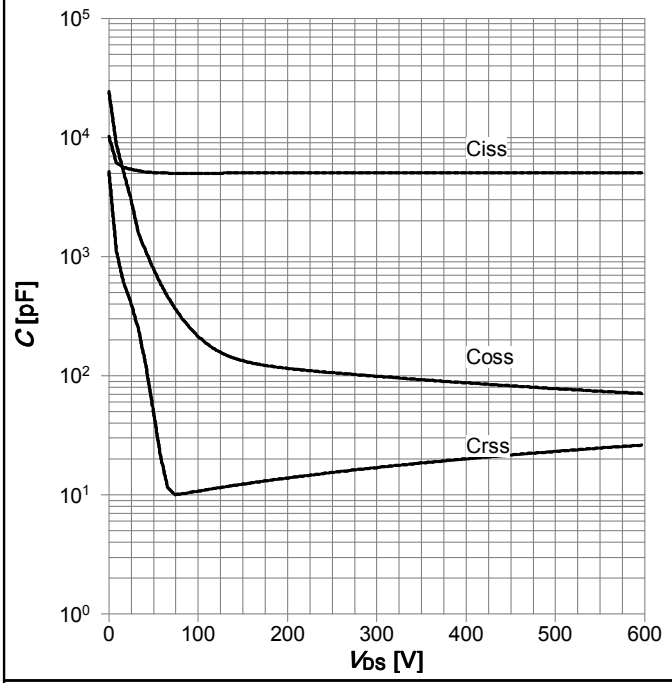	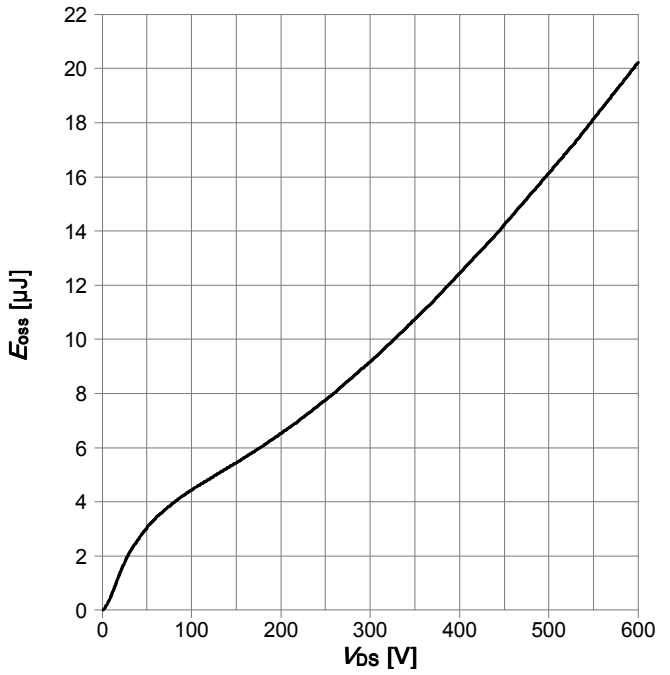
C=f(V_{DS}); V_{GS}=0 V; f=1 MHz	E_{oss}=f(V_{DS})

Table 15

Forward characteristics of reverse diode
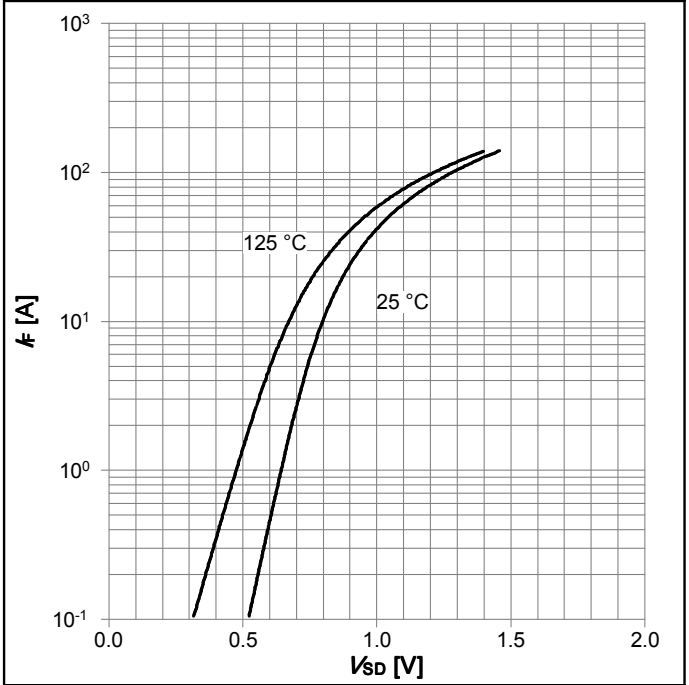
I_F=f(V_{SD}); parameter: T_j

6 Test Circuits

Table 16 Diode_characteristics

Test circuit for diode characteristics	Diode recovery waveform
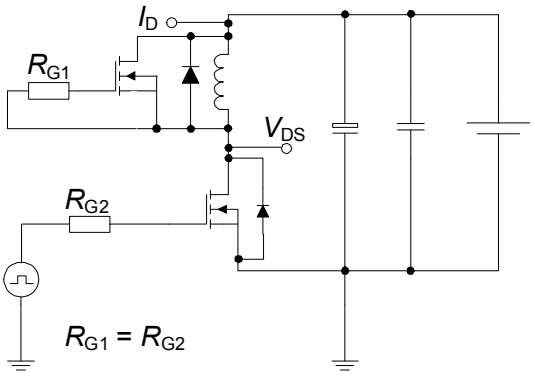	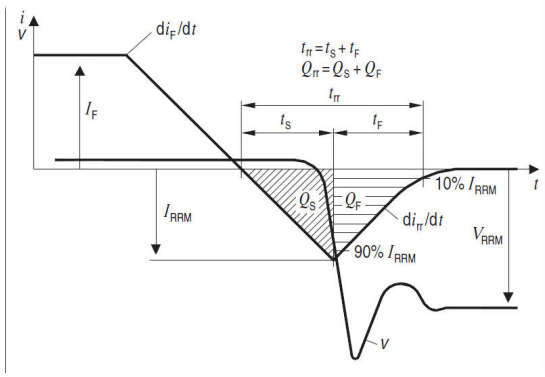

Table 17 Switching_times

Switching times test circuit for inductive load	Switching times waveform
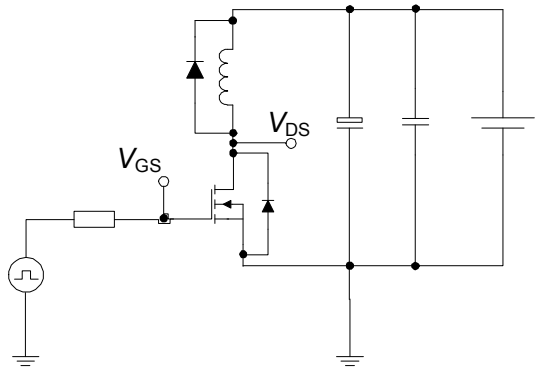	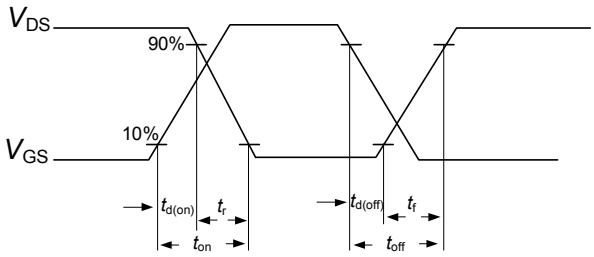

Table 18 Unclamped_inductive

Unclamped inductive load test circuit	Unclamped inductive waveform
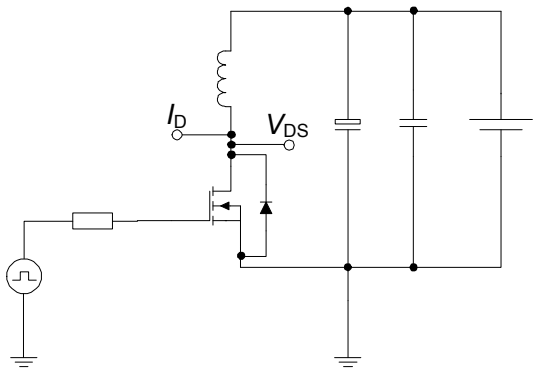	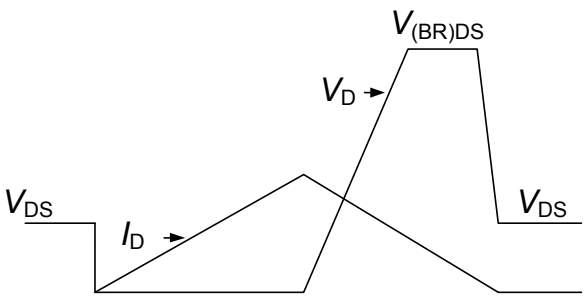

7 Package Outlines

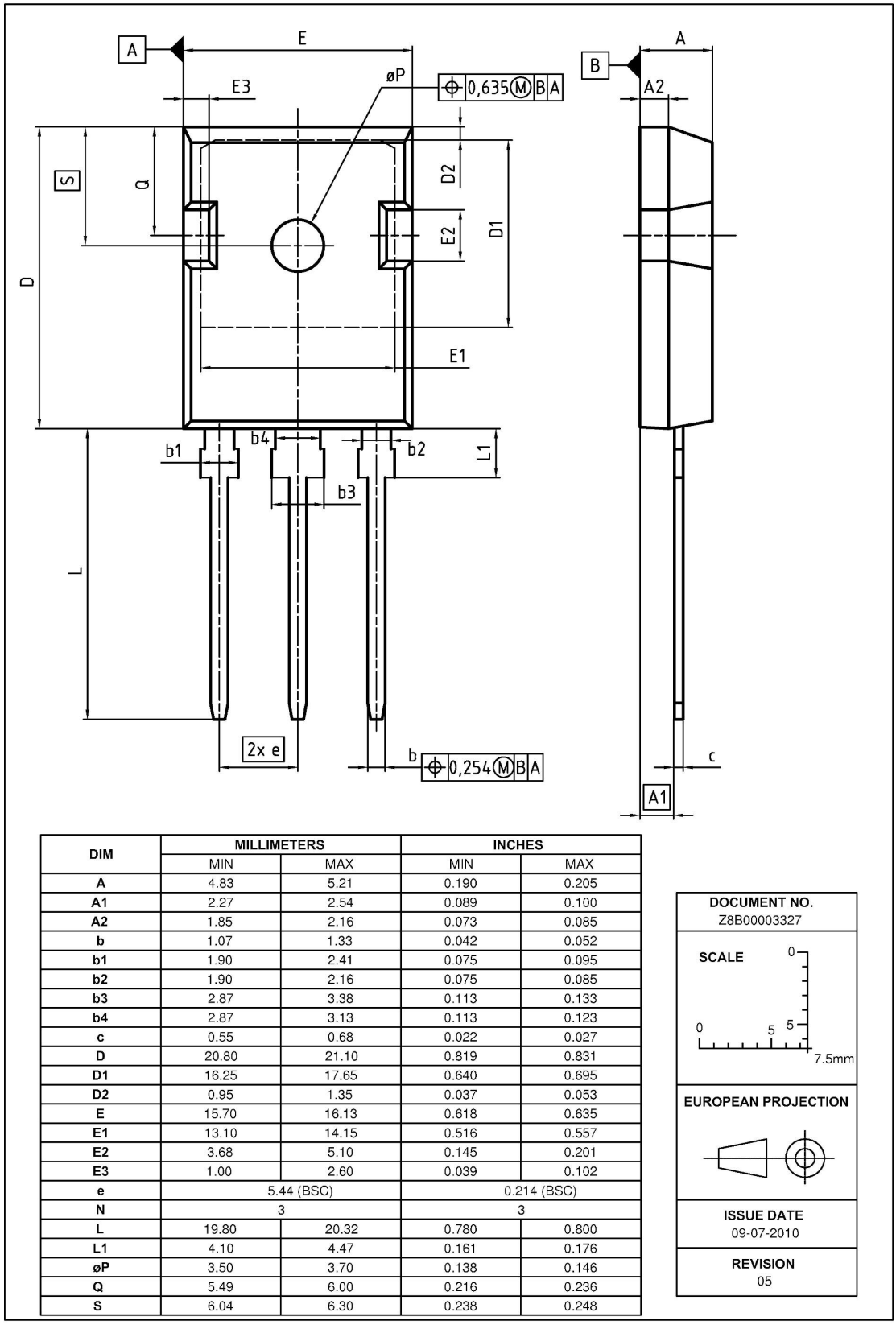

DIM	MILLIMETERS		INCHES	
	MIN	MAX	MIN	MAX
A	4.83	5.21	0.190	0.205
A1	2.27	2.54	0.089	0.100
A2	1.85	2.16	0.073	0.085
b	1.07	1.33	0.042	0.052
b1	1.90	2.41	0.075	0.095
b2	1.90	2.16	0.075	0.085
b3	2.87	3.38	0.113	0.133
b4	2.87	3.13	0.113	0.123
c	0.55	0.68	0.022	0.027
D	20.80	21.10	0.819	0.831
D1	16.25	17.65	0.640	0.695
D2	0.95	1.35	0.037	0.053
E	15.70	16.13	0.618	0.635
E1	13.10	14.15	0.516	0.557
E2	3.68	5.10	0.145	0.201
E3	1.00	2.60	0.039	0.102
e	5.44 (BSC)		0.214 (BSC)	
N	3		3	
L	19.80	20.32	0.780	0.800
L1	4.10	4.47	0.161	0.176
øP	3.50	3.70	0.138	0.146
Q	5.49	6.00	0.216	0.236
S	6.04	6.30	0.238	0.248

DOCUMENT NO.
Z8B00003327

SCALE
0 5 5 7.5mm

EUROPEAN PROJECTION

ISSUE DATE
09-07-2010

REVISION
05

Figure 1 Outline PG-TO 247, dimensions in mm/inches

8 Appendix A

Table 19 Related Links

- **IFX Design Tools:**
  http://www.infineon.com/cms/en/product/promopages/designtools/index.html
- **IFX CoolMOS Webpage:**
  http://www.infineon.com/cms/en/product/channel.html?channel=ff80808112ab681d0112ab6a628704d8

Revision History

IPW65R080CFD

Revision: 2011-09-27, Rev. 2.4

Previous Revision		
Revision	Date	Subjects (major changes since last revision)
2.1	2011-08-29	update to CFD2 standard
2.2	2011-09-15	update pin naming
2.3	2011-09-16	release of new pin naming
2.4	2011-09-27	update the Igss test condition

We Listen to Your Comments
Any information within this document that you feel is wrong, unclear or missing at all? Your feedback will help us to continuously improve the quality of this document. Please send your proposal (including a reference to this document) to:
erratum@infineon.com

Edition 2011-08-01
Published by
Infineon Technologies AG
81726 München, Germany
© 2011 Infineon Technologies AG
All Rights Reserved.

Legal Disclaimer
The information given in this document shall in no event be regarded as a guarantee of conditions or characteristics. With respect to any examples or hints given herein, any typical values stated herein and/or any information regarding the application of the device, Infineon Technologies hereby disclaims any and all warranties and liabilities of any kind, including without limitation, warranties of non-infringement of intellectual property rights of any third party.

Information
For further information on technology, delivery terms and conditions and prices please contact your nearest Infineon Technologies Office (**www.infineon.com**).

Warnings
Due to technical requirements, components may contain dangerous substances. For information on the types in question, please contact the nearest Infineon Technologies Office.
The Infineon Technologies component described in this Data Sheet may be used in life-support devices or systems and/or automotive, aviation and aerospace applications or systems only with the express written approval of Infineon Technologies, if a failure of such components can reasonably be expected to cause the failure of that life-support, automotive, aviation and aerospace device or system or to affect the safety or effectiveness of that device or system. Life support devices or systems are intended to be implanted in the human body or to support and/or maintain and sustain and/or protect human life. If they fail, it is reasonable to assume that the health of the user or other persons may be endangered.

ENTEGRECİ

Bu belge www.entegreci.com üzerinden sunulmaktadır.

Elektronik komponent tedarikinde Entegreci

Entegreci, Eskişehir merkezli, Türkiye geneline satış yapan bir elektronik komponent mağazasıdır. Entegreler (IC), mikrodenetleyiciler, transistörler, diyotlar, pasif elemanlar, konnektörler, modüller ve geliştirme kartları tek adetten seri üretim adetlerine kadar satılır. Ürün sayfalarında güncel stok durumunu, fiyatı ve datasheet bağlantısını bulabilirsiniz.

Parça koduyla arama

Üretici parça numarasını yazın; stok ve fiyatı hemen görün.

www.entegreci.com

Ürün kategorileri

Entegreden kapasitöre tüm elektronik komponent kategorileri.

Kategorilere göz atın

Üreticiler

Aradığınız üreticinin ürünlerini tek sayfada inceleyin.

Üreticileri görün

Toplu alım ve teklif

Listede olmayan ya da yüksek adetli parçalar için teklif isteyin.

Teklif isteyin

www.entegreci.com | **destek@entegreci.com** | **0850 305 90 34**

Entegreci is an online electronic components store based in Türkiye. Search by manufacturer part number to see stock, prices and datasheets for integrated circuits, microcontrollers, transistors, passive components and connectors, or request a quote for parts that are not listed.

Bu sayfa Entegreci tarafından eklenmiştir. Belgenin önceki sayfaları asıl yayıncısına aittir ve içeriği değiştirilmemiştir; en güncel sürüm için belgenin yayıncısına başvurun.