High Side Current Monitor
8V to 450V
Configurable Output

Features

- Supply voltage 8V to 450V
- Configurable as a current or voltage output device
- Maximum sense amplifier offset of 15mV
- Max V_{SENSE} of 500mV
- Fast rise and fall time, from 700ns to 2.0µs
- Maximum quiescent current of 50µA

Applications

- SMPS current monitor
- Battery current monitor
- Motor control

General Description

The HV7802 high side current monitor IC contains a transconductance amplifier which translates a high side current measurement voltage into an output current with resistor programmable transconductance gain. An optional second resistor transforms this output current into an output voltage with an overall voltage gain set by the ratio of the two resistors.

The measurement voltage typically originates at a current sense resistor, which is located in a “high side” circuit, for example a circuit not directly associated with ground.

This monitor IC features a very wide input voltage range, configurable gain, small size, low component count, low power consumption, ease of use, and low cost. Offline, battery, and portable applications can be served equally well due to the wide input voltage range and the low quiescent current.

Typical Application Circuit

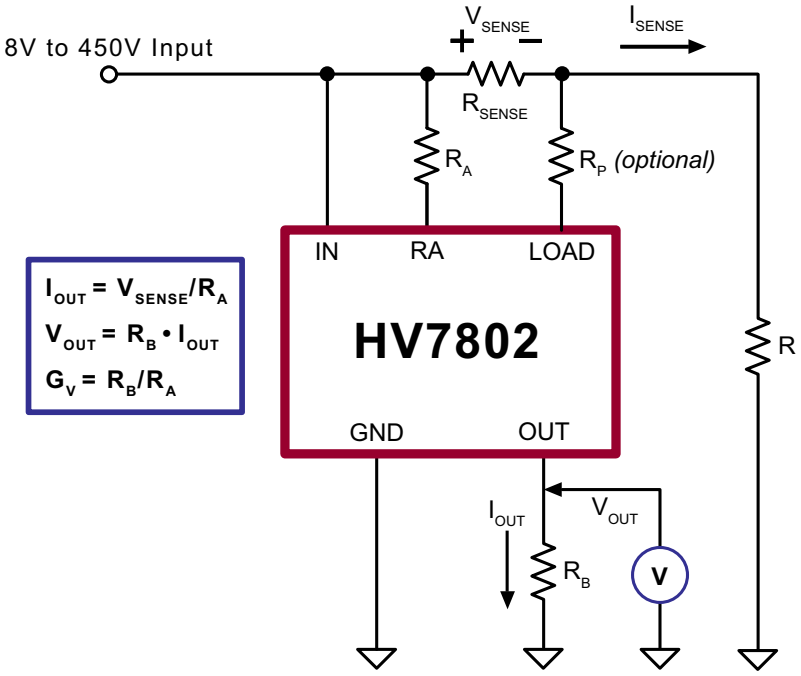

Ordering Information

Part Number	Package Option	Packing
HV7802MG-G	8-Lead MSOP	2500/Reel

-G denotes a lead (Pb)-free / RoHS compliant package

Absolute Maximum Ratings

Parameter	Value
V_{IN}, V_{LOAD}	-0.5V to +460V
V_{OUT}	-0.5V to +10V
V_{SENSE}	-0.5V to +5.0V
I_{LOAD}	±10mA
Operating ambient temperature	-40°C to +85°C
Operating junction temperature	-40°C to +125°C
Storage temperature	-65°C to +150°C

Absolute maximum ratings are those values beyond which damage to the device may occur. Functional operation under these conditions is not implied. Continuous operation of the device at the absolute rating level may affect device reliability. All voltages are referenced to device ground.

Notes:

1. *Referenced to GND*
2. $V_{SENSE} = V_{IN} - V_{LOAD}$

Pin Configuration

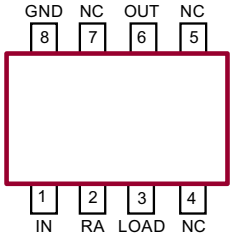

8-Lead MSOP
(top view)

Product Marking



L = Lot Number
YY = Year Sealed
WW = Week Sealed
____ = "Green" Packaging

Package may or may not include the following marks: Si or

8-Lead MSOP

Typical Thermal Resistance

Package	θ_{ja}
8-Lead MSOP	216°C/W

Note:
Thermal testboard per JEDEC JESD51-7

Electrical Characteristics *(T_A = 25°C unless otherwise specified, $V_{SENSE} = V_{IN} - V_{LOAD}$, V_{IN} = 8V to 450V)*

Sym	Parameter	Min	Typ	Max	Units		Conditions
Supply							
V_{IN}	Supply voltage	8.0	-	450	V	*	---
I_Q	Quiescent supply current	-	-	50	µA	-	V_{IN} = 8V to 450V, V_{SENSE} = 0mV
Input and Output							
I_{OUT}	Ouput current	-	-	200	µA	-	---
V_{OUT}	Output voltage, $R_A = R_B$ = 5.000kΩ	0	-	15	mV	-	V_{SENSE} = 0mV
		79	-	121			V_{SENSE} = 100mV
		177	-	223			V_{SENSE} = 200mV
		470	-	530			V_{SENSE} = 500mV
Dynamic Characteristics							
t_{RISE}	Output rise time, 10% to 90%	-	0.7	-	µs	-	V_{SENSE} step 5.0mV to 500mV
		-	-	2.0			V_{SENSE} step 0mV to 500mV
t_{FALL}	Output fall time, 90% to 10%	-	0.7	2.0	µs	-	V_{SENSE} step 500mV to 0mV

* *Values apply over the full temperature range.*

Block Diagram

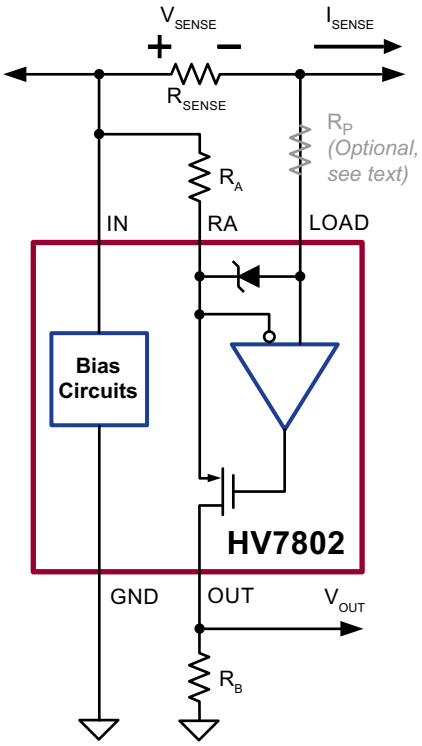

Application Information

General

The HV7802 high side current monitor IC features accurate current sensing, small size, low component count, low power consumption, exceptional input voltage range, ease of use and low cost.

Typical use is measurement of line and load current for purpose of overcurrent protection, metering and current regulation.

High side current sensing, as opposed to ground referenced or low side current sensing, is desirable or required when:

- The current to be measured does not flow in a circuit associated with ground.
- The measurement at ground level can lead to ambiguity due to changes in the grounding arrangement during field use.
- The introduction of a sense resistor in the system ground is undesirable due to issues with safety, EMI, or signal degradation caused by common impedance coupling.

Principle of Operation

The operational amplifier forces the voltage across R_A to track V_{SENSE}, therefore, $V_{RA} = V_{SENSE}$. Transconductance gain is equal to $(1/R_A)$.

I_{RA} flows from the OUT pin to low side circuitry. Current to voltage conversion can be accomplished by a resistor, R_B, as shown in the block diagram, with a transimpedance gain equal to R_B.

Typically we would like to exploit the full current capability of the transimpedance amplifier. A R_A of 5kΩ will provide this current, assuming a full scale sense voltage of 500mV and a full scale sense current of 100µA.

In a voltage output application, the output resistor R_B is determined by the desired overall voltage gain of (R_B / R_A). For example, a R_B of 10kΩ results in a voltage gain of two.

OUT Pin Loading Effects

Note that the output is not buffered having an output impedance equal to R_B. Loading of the output causes voltage gain to drop and rise and fall time to increase.

For example, assume a gain of one, using $R_A = R_B = 5kΩ$. In this case the load resistance should exceed 5MΩ in order to limit the gain drop to 1 part in 1000.

Assuming an output resistance of 5kΩ, a capacitive load of 20pF results in a load pole with a time constant of 100ns, not enough to materially affect the output rise and fall time (about 700ns).

Sense Resistor Considerations

Limit the sense resistor voltage to 500mV during normal operating conditions. Limit the power dissipation in the sense resistor to suit the application; a high sense voltage benefits accuracy, but may result in high power dissipation as well.

Consider the use of Kelvin connections for applications where considerable voltage drops may occur in the PCB traces. A layout pattern, which minimizes voltage drops across the sense lines is shown below.

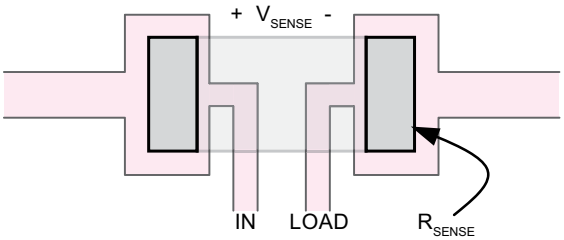

Choose a low inductance type sense resistor if preservation of bandwidth is important. Kelvin connections help by minimizing the inductive voltage drops as well. The inductive voltage drop may be substantial when operating at high frequency. A trace or component inductance of just 10nH contributes an impedance of 6.2mΩ at 100kHz, which constitutes a 6% error when using a 100mΩ sense resistor.

Transient Protection

Add a protection resistor (R_P) in series with the LOAD pin if V_{SENSE} can exceed 5.0V in positive sense or 600mV in negative sense, whether in steady state or in transient conditions.

A large V_{SENSE} may occur during system startup or shutdown when charging and discharging large capacitors. V_{SENSE} may be large due to fault conditions, such as short circuit or a broken or missing sense resistor.

An internal 5.0V Zener diode with a current rating of 10mA protects the sense amplifier inputs. The block diagram shows the orientation of this diode. The Zener diode provides clamping at 5.0V for a positive V_{SENSE} and at 600mV for a negative V_{SENSE}.

Limit the Zener current to 10mA under worst case conditions. A 100kΩ resistor limits the maximum Zener diode current to 4.5mA when V_{SENSE} is 450V, whether positive or negative. Note that the protection resistor may affect bandwidth. The resistor forms a RC network with the trace and pin capacitance at the LOAD pin. For example, capacitance of 5.0pF results in a time constant of 500ns.

The protection resistor may cause an offset voltage due to bias current at the LOAD input. A 100kΩ protection resistor could cause an offset of 100µV, or 0.2% of full scale, under worst case bias current. Note that bias current is nominally zero since LOAD is a high impedance CMOS input, resulting in zero bias current induced offset voltage.

Pin Description

Pin #	Pin Name	Description
1	IN	Sense amplifier input and supply.
2	RA	Provides gain setting of the transconductance amplifier. Connect gain setting resistor (R_A) between Pin 1 and Pin 2.
3	LOAD	Sense amplifier input. High impedance input with Zener diode protection. Add an external protection resistor in series with LOAD if V_{SENSE} exceeds the range of -600mV to +5.0V.
4	NC	No Connect. This pin must be left floating for proper operation
5	NC	No Connect. This pin must be left floating for proper operation.
6	OUT	Output of the transconductance amplifier. Output current to output voltage conversion can be accomplished through addition of an external resistor (R_B) at this pin. Overall voltage gain is determined by the ratio of R_B to R_A.
7	NC	No Connect. This pin must be left floating for proper operation.
8	GND	Supply return.

8-Lead MSOP Package Outline (MG)

3.00x3.00mm body, 1.10mm height (max), 0.65mm pitch

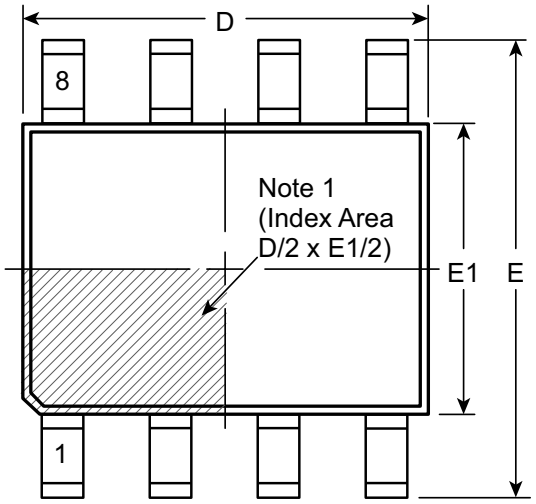

Top View

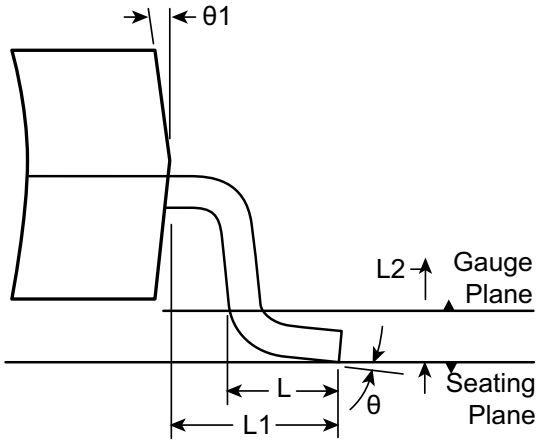

View B

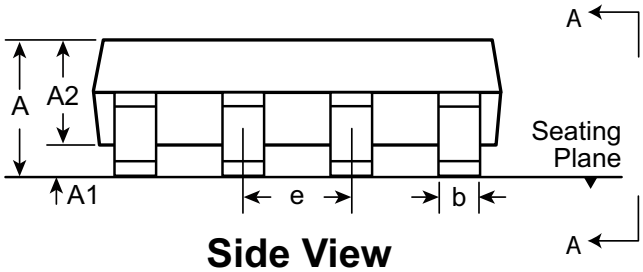

Side View

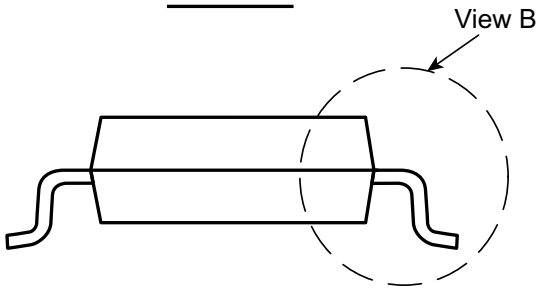

View A-A

Note:

1. *A Pin 1 identifier must be located in the index area indicated. The Pin 1 identifier can be: a molded mark/identifier; an embedded metal marker; or a printed indicator.*

Symbol		A	A1	A2	b	D	E	E1	e	L	L1	L2	θ	θ1
Dimension (mm)	MIN	0.75*	0.00	0.75	0.22	2.80*	4.65*	2.80*	0.65 BSC	0.40	0.95 REF	0.25 BSC	0°	5°
	NOM	-	-	0.85	-	3.00	4.90	3.00		0.60			-	-
	MAX	1.10	0.15	0.95	0.38	3.20*	5.15*	3.20*		0.80			8°	15°

JEDEC Registration MO-187, Variation AA, Issue E, Dec. 2004.
** This dimension is not specified in the JEDEC drawing.*
Drawings are not to scale.
***Supertex Doc. #:** DSPD-8MSOPMG, Version H041309.*

(The package drawing(s) in this data sheet may not reflect the most current specifications. For the latest package outline information go to http://www.supertex.com/packaging.html.)

Supertex inc. does not recommend the use of its products in life support applications, and will not knowingly sell them for use in such applications unless it receives an adequate "product liability indemnification insurance agreement." **Supertex inc.** does not assume responsibility for use of devices described, and limits its liability to the replacement of the devices determined defective due to workmanship. No responsibility is assumed for possible omissions and inaccuracies. Circuitry and specifications are subject to change without notice. For the latest product specifications refer to the **Supertex inc.** (website: http//www.supertex.com)

©2013 **Supertex inc.** All rights reserved. Unauthorized use or reproduction is prohibited.

Supertex inc.
1235 Bordeaux Drive, Sunnyvale, CA 94089
Tel: 408-222-8888
www.supertex.com

ENTEGRECİ

Bu belge www.entegreci.com üzerinden sunulmaktadır.

Elektronik komponent tedarikinde Entegreci

Entegreci, Eskişehir merkezli, Türkiye geneline satış yapan bir elektronik komponent mağazasıdır. Entegreler (IC), mikrodenetleyiciler, transistörler, diyotlar, pasif elemanlar, konnektörler, modüller ve geliştirme kartları tek adetten seri üretim adetlerine kadar satılır. Ürün sayfalarında güncel stok durumunu, fiyatı ve datasheet bağlantısını bulabilirsiniz.

Parça koduyla arama

Üretici parça numarasını yazın; stok ve fiyatı hemen görün.

www.entegreci.com

Ürün kategorileri

Entegreden kapasitöre tüm elektronik komponent kategorileri.

Kategorilere göz atın

Üreticiler

Aradığınız üreticinin ürünlerini tek sayfada inceleyin.

Üreticileri görün

Toplu alım ve teklif

Listede olmayan ya da yüksek adetli parçalar için teklif isteyin.

Teklif isteyin

www.entegreci.com | **destek@entegreci.com** | **0850 305 90 34**

Entegreci is an online electronic components store based in Türkiye. Search by manufacturer part number to see stock, prices and datasheets for integrated circuits, microcontrollers, transistors, passive components and connectors, or request a quote for parts that are not listed.

Bu sayfa Entegreci tarafından eklenmiştir. Belgenin önceki sayfaları asıl yayıncısına aittir ve içeriği değiştirilmemiştir; en güncel sürüm için belgenin yayıncısına başvurun.