MOSFET – Power, N-Channel, UltraFET

75 V, 150 A, 0,016 Ω

HUFA75852G3-F085

Features

- Ultra Low On−Resistance
  − $R_{DS(ON)}$ = 0.016 Ω, V_{GS} = 10 V
- Peak Current vs Pulse Width Curve
- UIS Rating Curve
- AEC−Q101 Qualified and PPAP Capable
- This Device is Pb−Free and is RoHS Compliant

ON Semiconductor®

www.onsemi.com

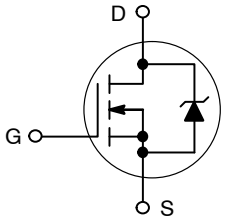

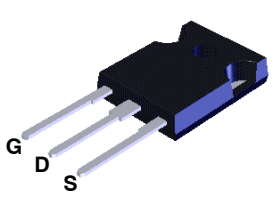

JEDEC TO−247
CASE 340CK

MARKING DIAGRAM

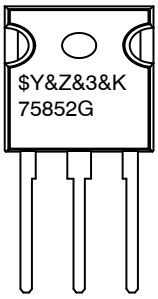

$Y	= ON Semiconductor Logo
&Z	= Assembly Plant Code
&3	= Data Code (Year & Week)
&K	= Lot
75852G	= Specific Device Code

ORDERING INFORMATION

See detailed ordering and shipping information on page 2 of this data sheet.

© Semiconductor Components Industries, LLC, 2011

ABSOLUTE MAXIMUM RATINGS (T_C = 25°C, Unless otherwise noted)

Symbol	Parameter		Value	Unit
V_{DSS}	Drain to Source Voltage (Note 1)		150	V
V_{DGR}	Gate to Gate Voltage (R_{GS} = 20 kΩ) (Note 1)		150	V
V_{GS}	Gate to Source Voltage		±20	V
I_D	Drain Current Continuous (T_C = 25°C, V_{GS} = 10 V) (Figure 2)		75	A
	Drain Current Continuous (T_C = 100°C, V_{GS} = 10 V) (Figure 2)		75	A
I_{DM}	Pulsed Drain Current		Figure 4	
UIS	Pulsed Avalanche Rating		Figures 6, 14, 15	
P_D	Power Dissipation	(T_C = 25°C)	500	W
		− Derate Above 25°C	3.33	W/°C
T_J, T_{STG}	Operating and Storage Temperature		−55 to +175	°C
T_L	Maximum Temperature for Soldering	Leads at 0.063 in (1.6 mm) from Case for 10 s	300	°C
T_{pkg}		Package Body for 10 s	260	°C

Stresses exceeding those listed in the Maximum Ratings table may damage the device. If any of these limits are exceeded, device functionality should not be assumed, damage may occur and reliability may be affected.

1. Starting T_J = 25°C to 150°C.

PACKAGE MARKING AND ORDERING INFORMATION

Part Number	Package	Brand
HUFA75852G3−F085	TO−247	75852G

ELECTRICAL CHARACTERISTICS (T_C = 25°C unless otherwise noted)

Symbol	Parameter	Test Conditions	Min.	Typ.	Max.	Unit
OFF STATE CHARACTERISTICS						
B_{VDSS}	Drain to Source Breakdown Voltage	I_D = 250 μA, V_{GS} = 0 V (Figure 11)	150			V
I_{DSS}	Zero Gate Voltage Drain Current	V_{DS} = 140 V, V_{GS} = 0 V			1	μA
		V_{DS} = 135 V, V_{GS} = 0 V, T_C = 150°C			250	
I_{GSS}	Gate to Source Leakage Current	V_{GS} = ±20 V			±100	nA
ON STATE CHARACTERISTICS						
$V_{GS(TH)}$	Gate to Source Threshold Voltage	V_{GS} = V_{DS}, I_D = 250 μA (Figure 10)	2.0		4.0	V
$R_{DS(ON)}$	Drain to Source On Resistance	I_D = 75 A, V_{GS} = 10 V (Figure 9)		0.013	0.016	Ω
THERMAL CHARACTERISTICS						
$R_{\theta JC}$	Thermal Resistance Junction to Case	TO−247			0.30	°C/W
$R_{\theta JA}$	Thermal Resistance Junction to Ambient				30	°C/W
SWITCHING CHARACTERISTICS						
t_{on}	Turn-On Time	V_{DD} = 75 V I_D = 75 A V_{GS}= 10 V R_{GS} = 2.0 Ω (Figures 18, 19)			260	ns
$t_{d(on)}$	Turn-On Delay Time			22		ns
t_r	Rise Time			151		ns
$t_{d(off)}$	Turn-Off Delay Time			82		ns
t_f	Fall Time			107		ns
t_{off}	Turn-Off Time				285	ns
GATE CHARGE CHARACTERISTICS						
$Q_{g(TOT)}$	Total Gate Charge	V_{GS} = 0 V to 20 V; V_{DD} = 75 V, I_D = 75 A, $I_{g(REF)}$ = 1.0 mA (Figures 13,16,17)		400	480	nC
$Q_{g(10)}$	Total Gate Charge 10 V	V_{GS} = 0 V to 10 V; V_{DD} = 75 V, I_D = 75 A, $I_{g(REF)}$ = 1.0 mA (Figures 13,16,17)		215	260	nC
$Q_{g(TH)}$	Threshold Gate Charge	V_{GS} = 0 V to 2 V; V_{DD} = 75 V, I_D = 75 A, $I_{g(REF)}$ = 1.0 mA (Figures 13,16,17)		15	17.5	nC
Q_{gs}	Gate to Source Gate Charge	V_{DD} = 75 V, I_D = 75 A $I_{g(REF)}$ = 1.0 mA, (Figures 13,16, 17)		25		nC
Q_{gd}	Gate to Drain “Miller” Charge			66		nC
CAPACITANCE CHARACTERISTICS						
C_{ISS}	Input Capacitance	V_{DS} = 25 V, V_{GS} = 0 V, f = 1 MHz (Figure 12)		7690		pF
C_{OSS}	Output Capacitance			1650		pF
C_{RSS}	Reverse Transfer Capacitance			535		pF
SOURCE TO DRAIN DIODE CHARACTERISTICS						
V_{SD}	Source to Drain Diode Voltage	I_{SD} = 75 A			1.25	V
		I_{SD} = 35 A			1.00	V
t_{rr}	Reverse Recovery Time	I_{SD} = 75 A, dI_{SD}/dt = 100 A/μs			260	ns
Q_{rr}	Reverse Recovery Charge				1830	nC

Product parametric performance is indicated in the Electrical Characteristics for the listed test conditions, unless otherwise noted. Product performance may not be indicated by the Electrical Characteristics if operated under different conditions.

TYPICAL CHARACTERISTICS

(T_C = 25°C unless otherwise noted)

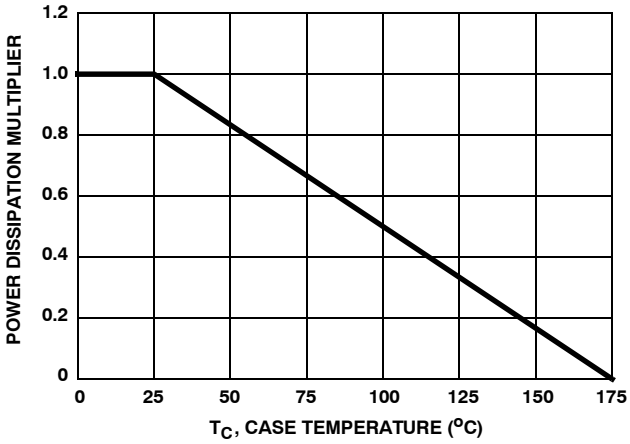

Figure 1. Normalized Power Dissipation vs. Case Temperature

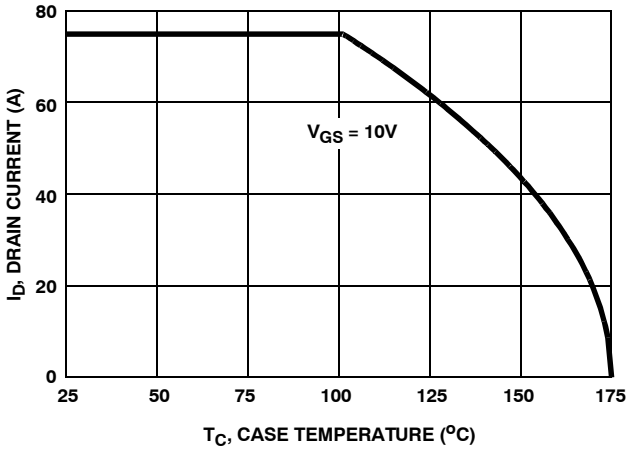

Figure 2. Maximum Continuous Drain Current vs Case Temperature

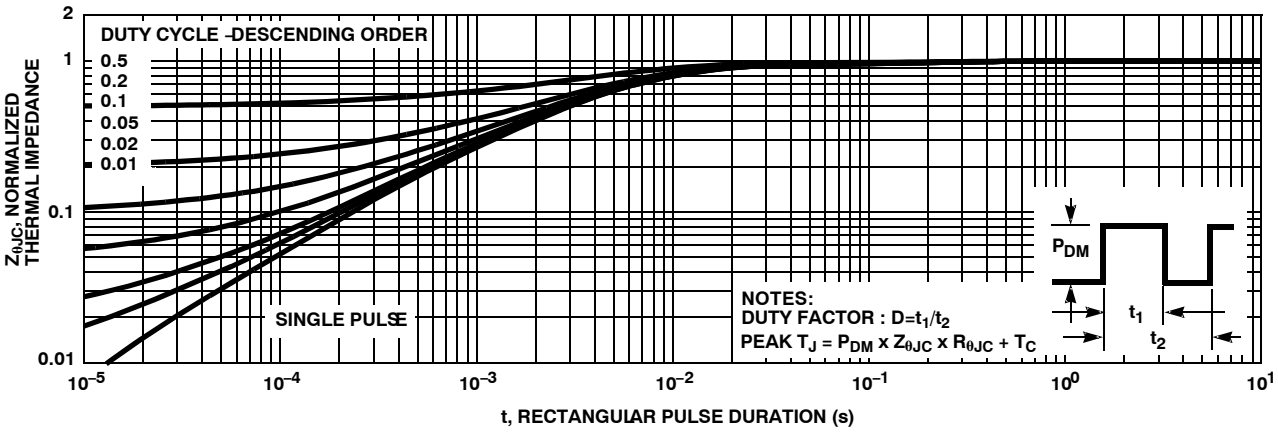

Figure 3. Normalized Maximum Transient Thermal Impedance

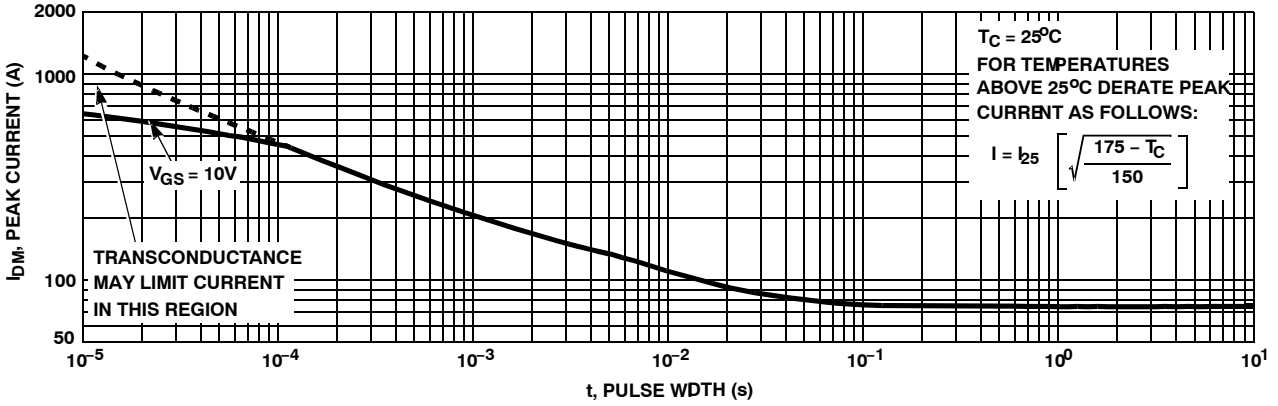

Figure 4. Peak Current Capability

TYPICAL CHARACTERISTICS (Continued)

T_C = 25°C unless otherwise noted

NOTE: Refer to ON Semiconductor Application Notes AN−7514 and AN−7515

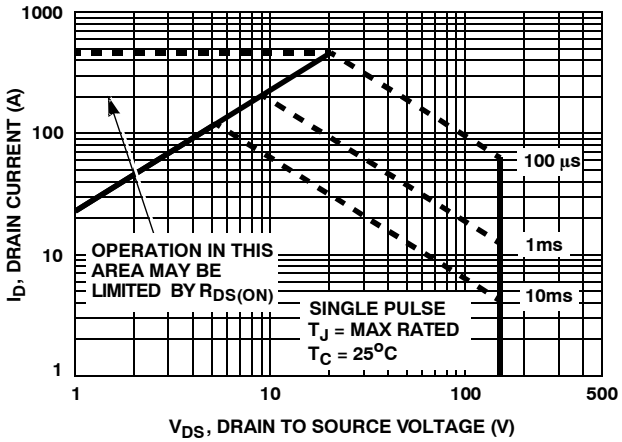

Figure 5. Forward Bias Safe Operating Area

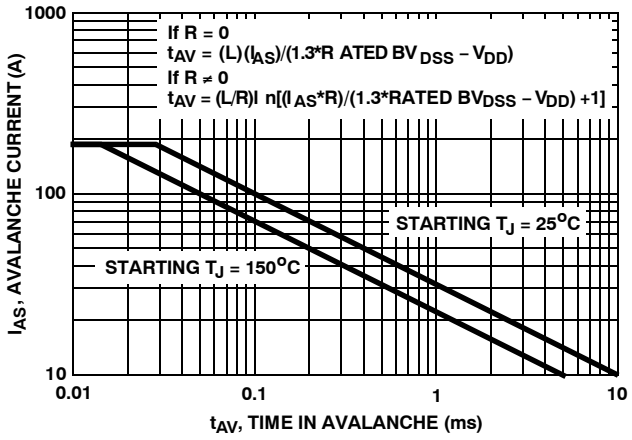

Figure 6. Unclamped Inductive Switching Capability

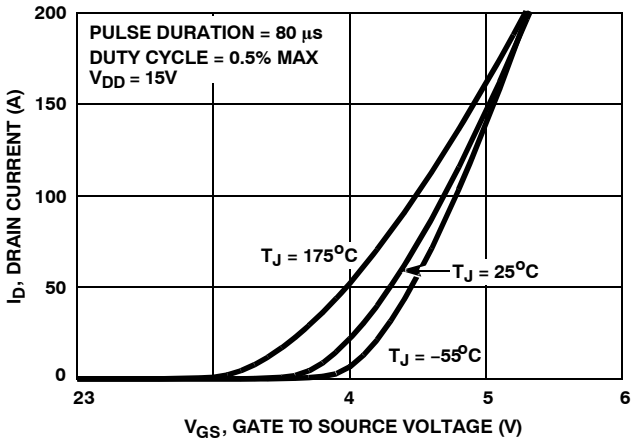

Figure 7. Transfer Characteristics

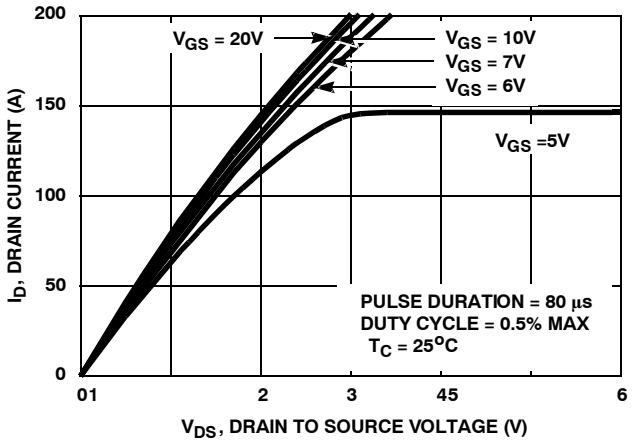

Figure 8. Saturation Characteristics

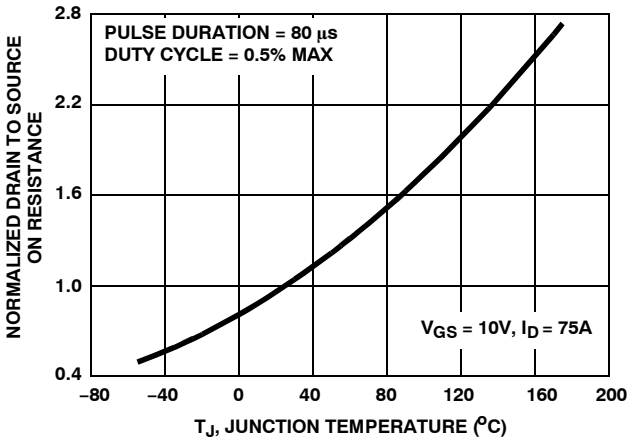

Figure 9. Normalized Drain to Source On Resistance vs Junction Temperature

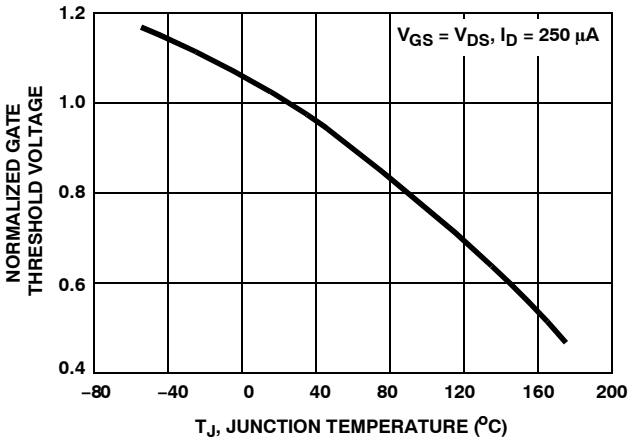

Figure 10. Normalized Gate Threshold Voltage vs Junction Temperature

TYPICAL CHARACTERISTICS (Continued)

(T_C = 25°C unless otherwise noted)

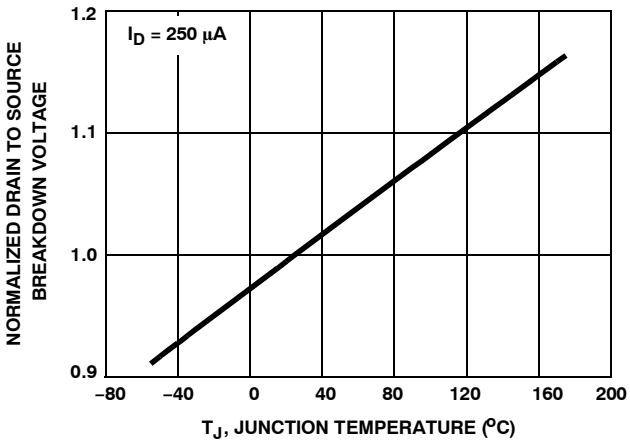

Figure 11. Normalized Drain to Source Breakdown Voltage vs Junction Temperature

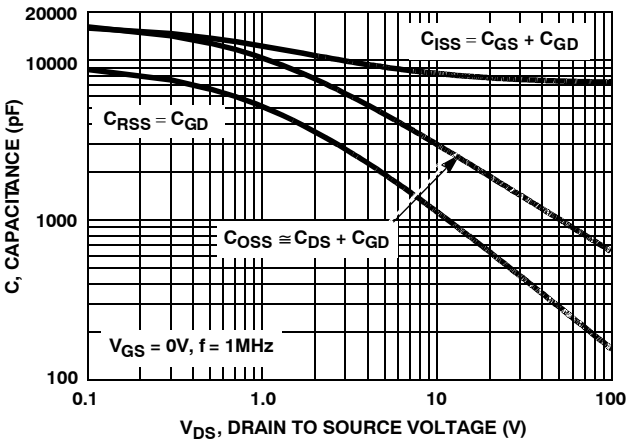

Figure 12. Capacitance vs. Drain to Source Voltage

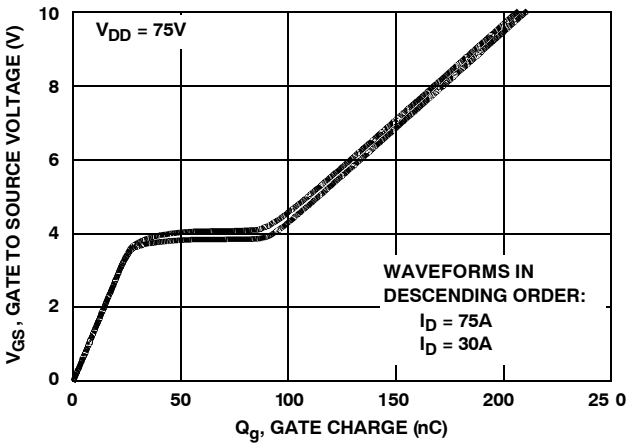

Figure 13. Gate Charge Waveforms for Constant Gate Current

TEST CIRCUITS AND WAVEFORMS

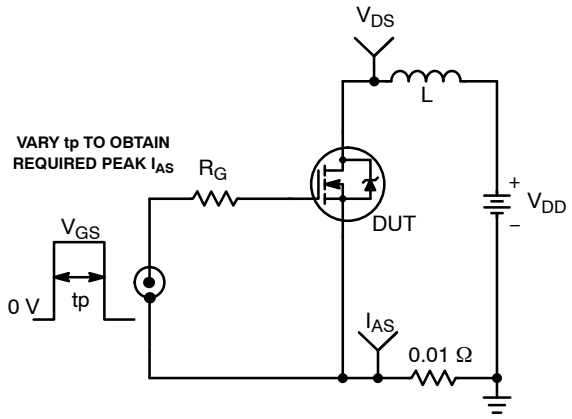

Figure 14. Unclamped Energy Test Curcuit

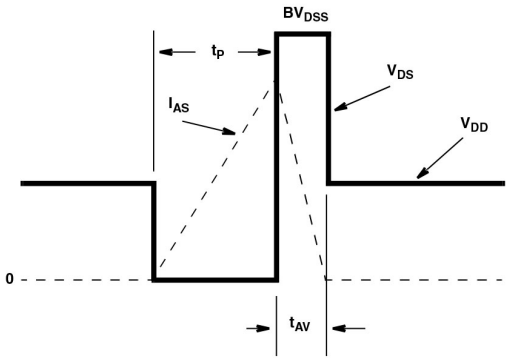

Figure 15. Unclamped Energy Waveforms

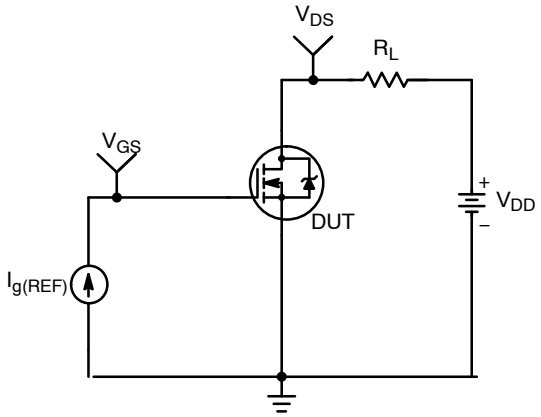

Figure 16. Gate Charge Test Circuit

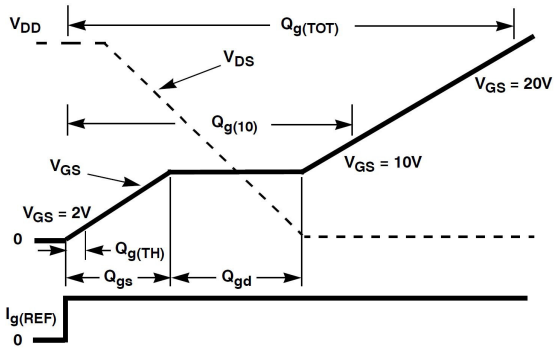

Figure 17. Gate Charge Waveforms

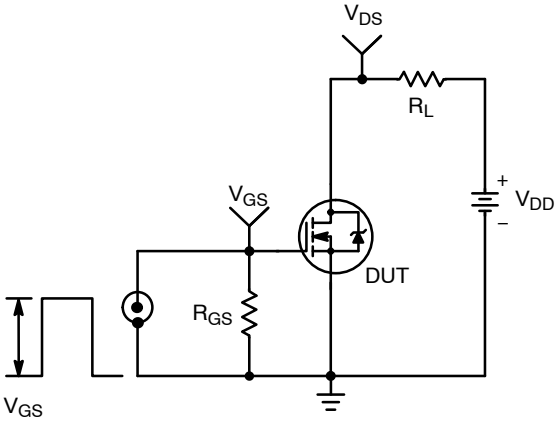

Figure 18. Switching Time Test Circuit

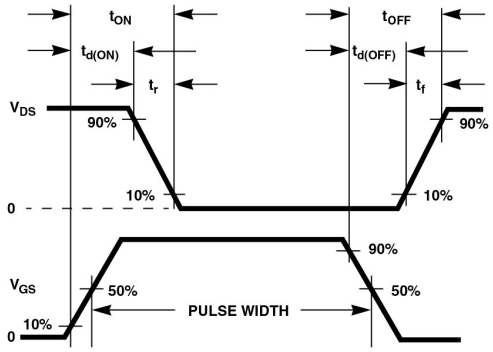

Figure 19. Switching Time Waveforms

TO−247−3LD SHORT LEAD
CASE 340CK
ISSUE A

DATE 31 JAN 2019

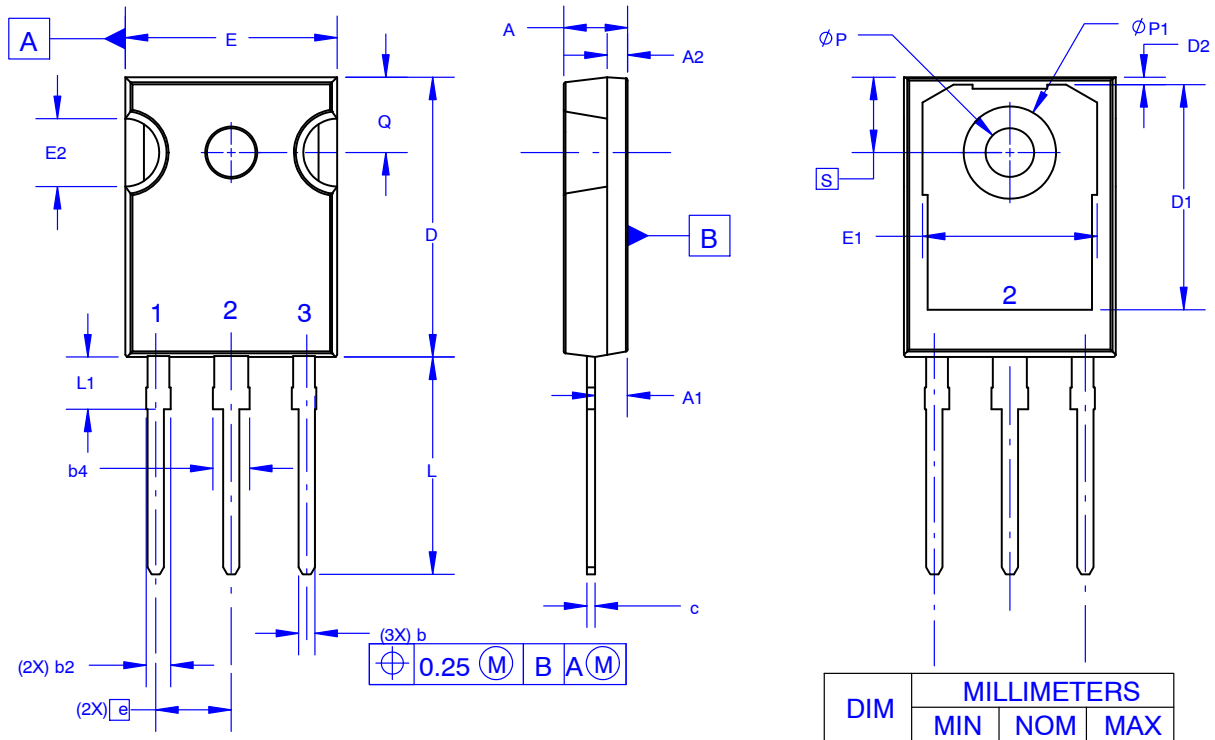

DIM	MILLIMETERS		
	MIN	NOM	MAX
A	4.58	4.70	4.82
A1	2.20	2.40	2.60
A2	1.40	1.50	1.60
b	1.17	1.26	1.35
b2	1.53	1.65	1.77
b4	2.42	2.54	2.66
c	0.51	0.61	0.71
D	20.32	20.57	20.82
D1	13.08	~	~
D2	0.51	0.93	1.35
E	15.37	15.62	15.87
E1	12.81	~	~
E2	4.96	5.08	5.20
e	~	5.56	~
L	15.75	16.00	16.25
L1	3.69	3.81	3.93
ØP	3.51	3.58	3.65
ØP1	6.60	6.80	7.00
Q	5.34	5.46	5.58
S	5.34	5.46	5.58

NOTES: UNLESS OTHERWISE SPECIFIED.

A. DIMENSIONS ARE EXCLUSIVE OF BURRS, MOLD FLASH, AND TIE BAR EXTRUSIONS.
B. ALL DIMENSIONS ARE IN MILLIMETERS.
C. DRAWING CONFORMS TO ASME Y14.5 - 2009.
D. DIMENSION A1 TO BE MEASURED IN THE REGION DEFINED BY L1.
E. LEAD FINISH IS UNCONTROLLED IN THE REGION DEFINED BY L1.

GENERIC MARKING DIAGRAM*

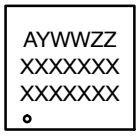

XXXX = Specific Device Code
A = Assembly Location
Y = Year
WW = Work Week
ZZ = Assembly Lot Code

*This information is generic. Please refer to device data sheet for actual part marking. Pb−Free indicator, “G” or microdot “▪”, may or may not be present. Some products may not follow the Generic Marking.

DOCUMENT NUMBER:	**98AON13851G**	Electronic versions are uncontrolled except when accessed directly from the Document Repository. Printed versions are uncontrolled except when stamped “CONTROLLED COPY” in red.
DESCRIPTION:	**TO−247−3LD SHORT LEAD**	**PAGE 1 OF 1**

onsemi and onsemi are trademarks of Semiconductor Components Industries, LLC dba **onsemi** or its subsidiaries in the United States and/or other countries. **onsemi** reserves the right to make changes without further notice to any products herein. **onsemi** makes no warranty, representation or guarantee regarding the suitability of its products for any particular purpose, nor does **onsemi** assume any liability arising out of the application or use of any product or circuit, and specifically disclaims any and all liability, including without limitation special, consequential or incidental damages. **onsemi** does not convey any license under its patent rights nor the rights of others.

© Semiconductor Components Industries, LLC, 2016

onsemi, , and other names, marks, and brands are registered and/or common law trademarks of Semiconductor Components Industries, LLC dba "**onsemi**" or its affiliates and/or subsidiaries in the United States and/or other countries. **onsemi** owns the rights to a number of patents, trademarks, copyrights, trade secrets, and other intellectual property. A listing of **onsemi**'s product/patent coverage may be accessed at www.onsemi.com/site/pdf/Patent−Marking.pdf. **onsemi** reserves the right to make changes at any time to any products or information herein, without notice. The information herein is provided "as−is" and **onsemi** makes no warranty, representation or guarantee regarding the accuracy of the information, product features, availability, functionality, or suitability of its products for any particular purpose, nor does **onsemi** assume any liability arising out of the application or use of any product or circuit, and specifically disclaims any and all liability, including without limitation special, consequential or incidental damages. Buyer is responsible for its products and applications using **onsemi** products, including compliance with all laws, regulations and safety requirements or standards, regardless of any support or applications information provided by **onsemi**. "Typical" parameters which may be provided in **onsemi** data sheets and/or specifications can and do vary in different applications and actual performance may vary over time. All operating parameters, including "Typicals" must be validated for each customer application by customer's technical experts. **onsemi** does not convey any license under any of its intellectual property rights nor the rights of others. **onsemi** products are not designed, intended, or authorized for use as a critical component in life support systems or any FDA Class 3 medical devices or medical devices with a same or similar classification in a foreign jurisdiction or any devices intended for implantation in the human body. Should Buyer purchase or use **onsemi** products for any such unintended or unauthorized application, Buyer shall indemnify and hold **onsemi** and its officers, employees, subsidiaries, affiliates, and distributors harmless against all claims, costs, damages, and expenses, and reasonable attorney fees arising out of, directly or indirectly, any claim of personal injury or death associated with such unintended or unauthorized use, even if such claim alleges that **onsemi** was negligent regarding the design or manufacture of the part. **onsemi** is an Equal Opportunity/Affirmative Action Employer. This literature is subject to all applicable copyright laws and is not for resale in any manner.

ADDITIONAL INFORMATION

TECHNICAL PUBLICATIONS:
Technical Library: www.onsemi.com/design/resources/technical−documentation
onsemi Website: www.onsemi.com

ONLINE SUPPORT: www.onsemi.com/support
For additional information, please contact your local Sales Representative at www.onsemi.com/support/sales

ENTEGRECİ

Bu belge www.entegreci.com üzerinden sunulmaktadır.

Elektronik komponent tedarikinde Entegreci

Entegreci, Eskişehir merkezli, Türkiye geneline satış yapan bir elektronik komponent mağazasıdır. Entegreler (IC), mikrodenetleyiciler, transistörler, diyotlar, pasif elemanlar, konnektörler, modüller ve geliştirme kartları tek adetten seri üretim adetlerine kadar satılır. Ürün sayfalarında güncel stok durumunu, fiyatı ve datasheet bağlantısını bulabilirsiniz.

Parça koduyla arama

Üretici parça numarasını yazın; stok ve fiyatı hemen görün.

www.entegreci.com

Ürün kategorileri

Entegreden kapasitöre tüm elektronik komponent kategorileri.

Kategorilere göz atın

Üreticiler

Aradığınız üreticinin ürünlerini tek sayfada inceleyin.

Üreticileri görün

Toplu alım ve teklif

Listede olmayan ya da yüksek adetli parçalar için teklif isteyin.

Teklif isteyin

www.entegreci.com | **destek@entegreci.com** | **0850 305 90 34**

Entegreci is an online electronic components store based in Türkiye. Search by manufacturer part number to see stock, prices and datasheets for integrated circuits, microcontrollers, transistors, passive components and connectors, or request a quote for parts that are not listed.

Bu sayfa Entegreci tarafından eklenmiştir. Belgenin önceki sayfaları asıl yayıncısına aittir ve içeriği değiştirilmemiştir; en güncel sürüm için belgenin yayıncısına başvurun.