Dual P-Channel Enhancement Mode MOSFET

Applications

Power Management in Notebook Computer, Portable Equipment and Battery Powered Systems.


1
SOP-8

Features

- -30V/-4.9A ,
  $R_{DS(ON)}$=53mΩ(typ.) @ VGS=-10V
  $R_{DS(ON)}$=80mΩ(typ.) @ VGS=-4.5V
- Reliableand Rugged
- Lead Freeand Green Device Available (RoHS Compliant)

Ordering Information

DEVICE	Package Type	MARKING	Packing	Packing Qty
HG4953M/TR	SOP-8	HG4953,4953	REEL	2500pcs/reel

Pin Description

SOP-8(Top View)

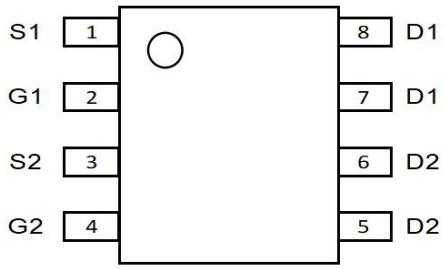

P-Channel MOSFET

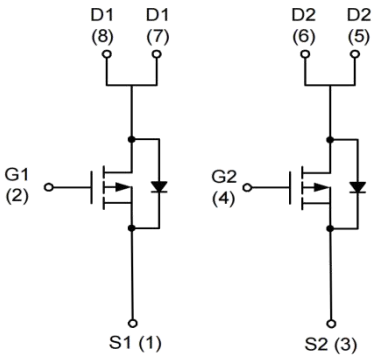

Absolute Maximum Ratings(1) (TA= 25℃ unless otherwise noted)

Symbol	Parameter		Rating	Unit
V_{DSS}	Drain-Source Voltage		-30	V
V_{GSS}	Gate-Source Voltage		±25	
I_D*	Continuous Drain Current	V_{GS}= -10V	-4.9	A
I_{DM}*	Pulsed Drain Current		-20	
I_S*	Diode Continuous Forward Current		-2	A
T_J	Maximum Junction Temperature		150	°C
T_{STG}	Storage Temperature Range		-55 to 150	
P_D*	Power Dissipation for Single Operation	T_A=25°C	2	W
		T_A=100°C	0.8	
$R_{\theta JA}$*	Thermal Resistance-Junction to Ambient		62.5	°C/W
T_L	Lead Temperature (Soldering, 10 seconds)		260	°C

Note:1、Absolute Maximum Ratings indicate limits beyond which damage to the device may occur. Operating Ratings indicate conditions for which the device is intended to be functional, but specific performance is not ensured.
*Surface Mounted on 1in^2 pad area, t ≤ 10sec.

Electrical Characteristics (T_A = 25℃ unless otherwise noted)

Symbol	Parameter	Test Condition	HG4953			Unit
			Min.	Typ.	Max.	
Static Characteristics						
BV_{DSS}	Drain-Source Breakdown Voltage	V_{GS}=0V, I_{DS}=250μA	-30			V
I_{DSS}	Zero Gate Voltage Drain Current	V_{DS}=-24V, V_{GS}=0V			-1	μA
		T_J=85°C			-30	
$V_{GS(th)}$	Gate Threshold Voltage	V_{DS}=V_{GS}, I_{DS}=250μA	-1	-1.5	-2	V
I_{GSS}	Gate Leakage Current	V_{GS}=±25V, V_{DS}=0V			±100	nA
$R_{DS(ON)}$[a]	Drain-Source On-state Resistance	V_{GS}=-10V, I_{DS}=-4.9A		53	60	mΩ
		V_{GS}=-4.5V, I_{DS}=-3.6A		80	95	
V_{SD}[a]	Diode Forward Voltage	I_{SD}=-1.7A, V_{GS}=0V		-0.8	-1.3	V
Gate Charge Characteristics [b]						
Q_g	Total Gate Charge	V_{DS}=-15V, V_{GS}=-10V, I_{DS}=-4.9A		11.6	16	nC
Qgs	Gate-Source Charge			1.3		
Qgd	Gate-Drain Charge			2.5		

Electrical Characteristics (Cont.) (T_A = 25℃ unless otherwise noted)

Symbol	Parameter	Test Condition	SM4953K			Unit
			Min.	Typ.	Max.	
Dynamic Characteristics [b]						
R_G	Gate Resistance	V_{GS}=0V,V_{DS}=0V,F=1MHz		8		Ω
Ciss	Input Capacitance	V_{GS}=0V, V_{DS}=-15V, Frequency=1.0MHz		625		pF
Coss	Output Capacitance			100		
Crss	Reverse Transfer Capacitance			60		
td(ON)	Turn-on Delay Time	V_{DD}=-15V, R_L=15Ω, I_{DS}=-1A, V_{GEN}=-10V, R_G=6		6	12	ns
t_r	Turn-on Rise Time			12	23	
td(OFF)	Turn-off Delay Time			25	46	
t_f	Turn-off Fall Time			6	12	
trr	Reverse Recovery Time	I_{DS}=-4.9A, dI_{SD}/dt=100A/μs		14		ns
Qrr	Reverse Recovery Charge			5		nC

Notes:

a : Pulse test ; pulse width ≤ 300μs, duty cycle ≤ 2%.

b : Guaranteed by design, not subject to production testing.

Typical Characteristics

Power Dissipation

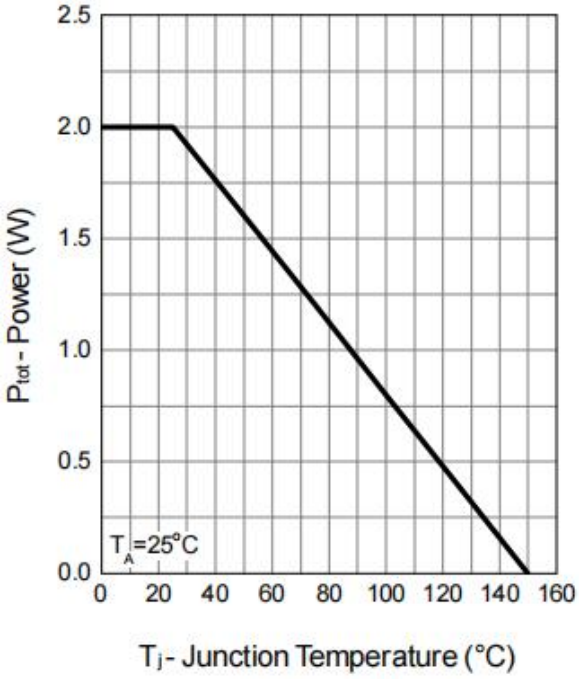

Drain Current

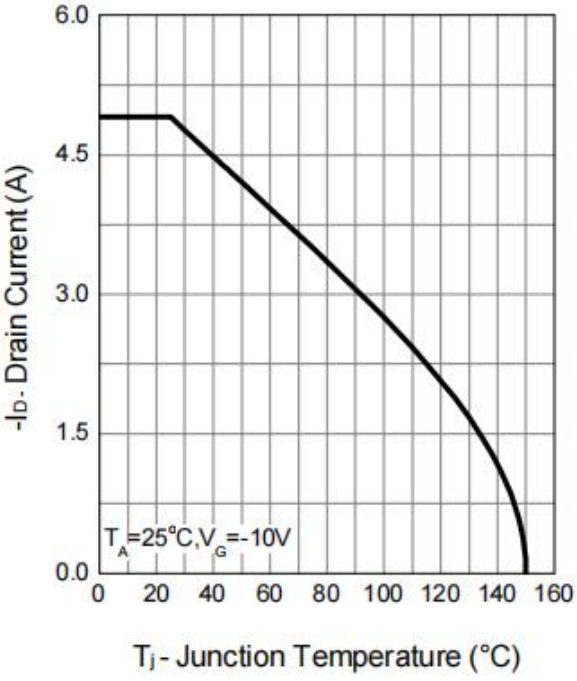

Safe Operation Area

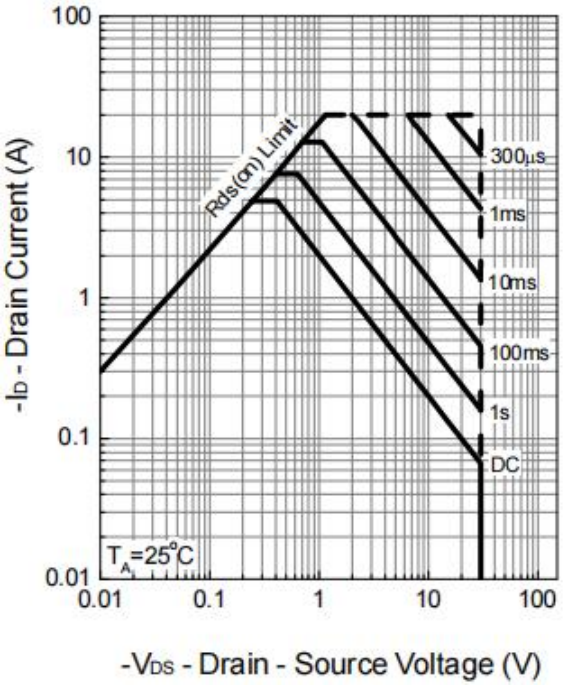

Thermal Transient Impedance

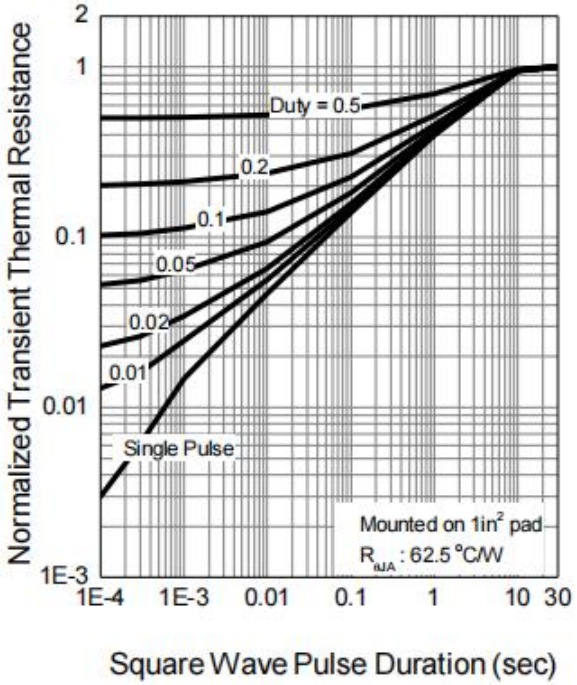

Typical Characteristics (Cont.)

Output Characteristics

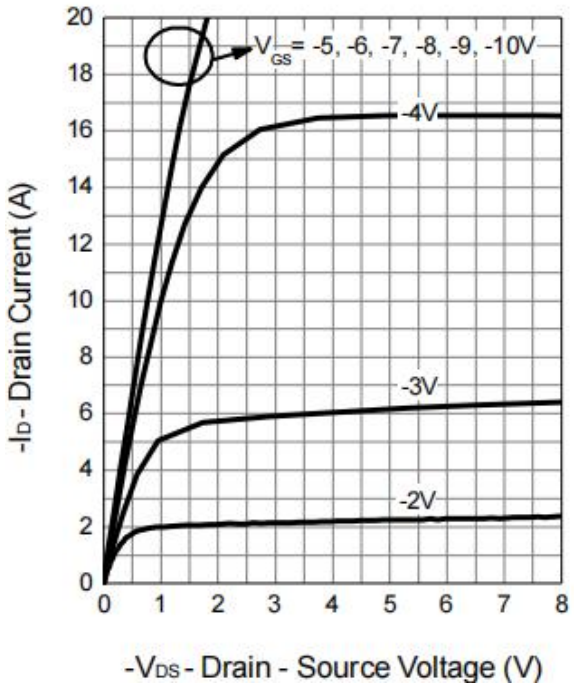

Drain-Source On Resistance

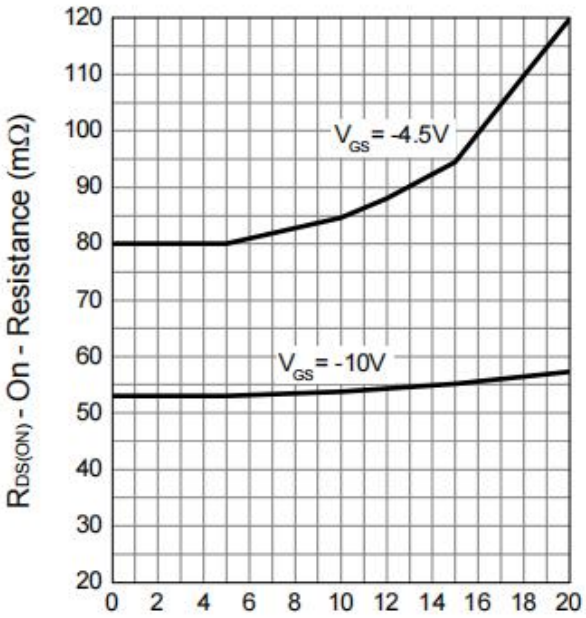

Drain-Source On Resistance

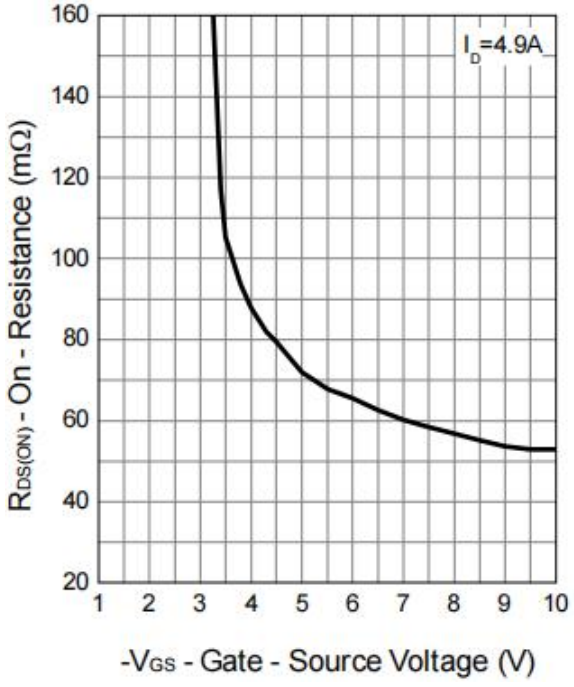

Gate Threshold Voltage

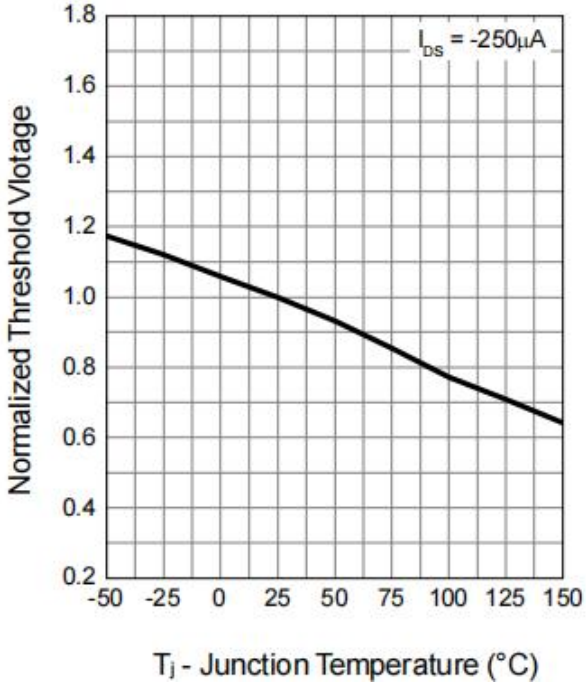

Typical Characteristics (Cont.)

Drain-Source On Resistance

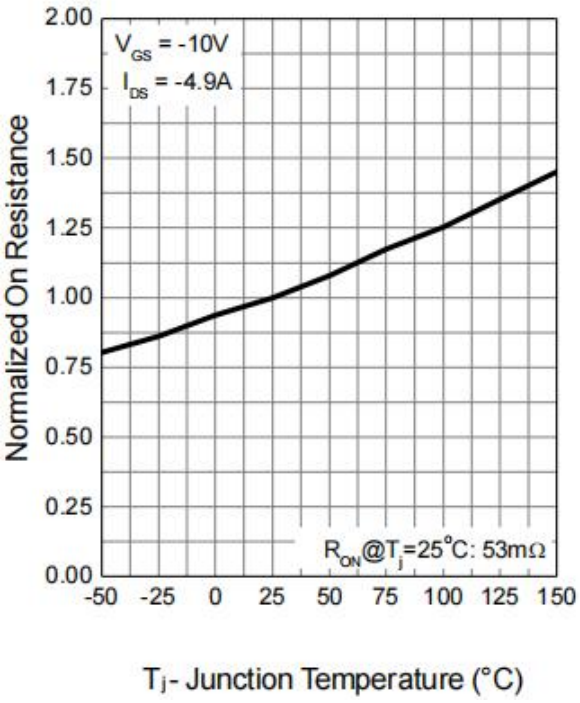

Source-Drain Diode Forward

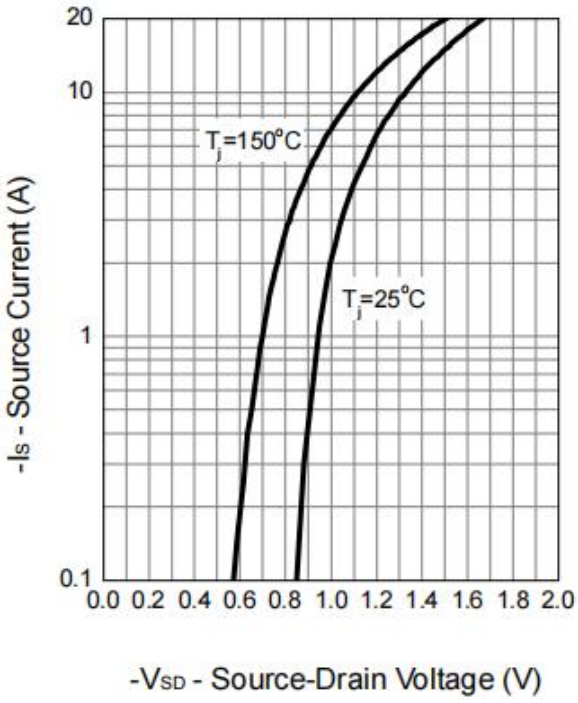

Capacitance

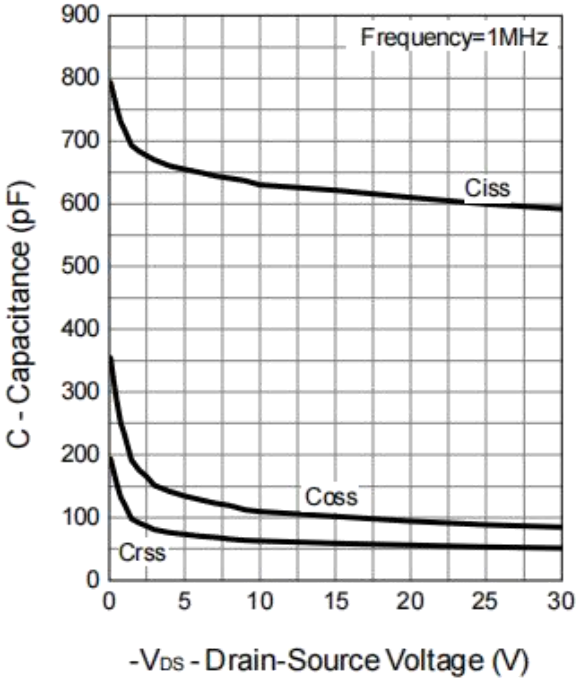

Gate Charge

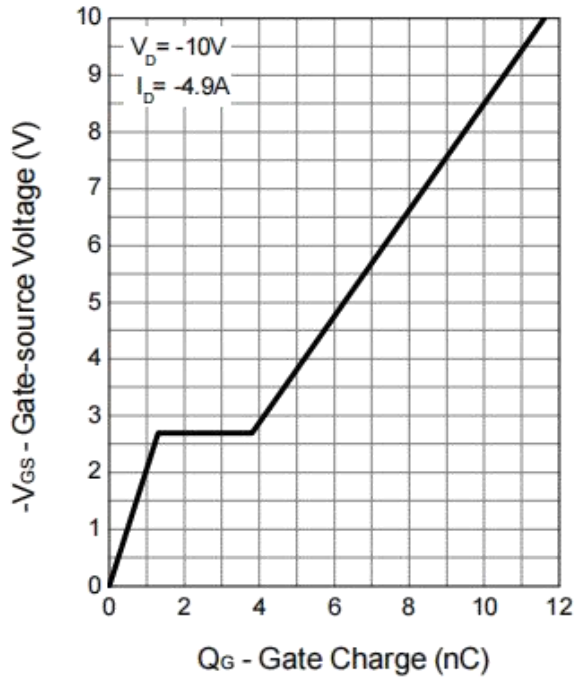

Avalanche Test Circuit and Waveforms

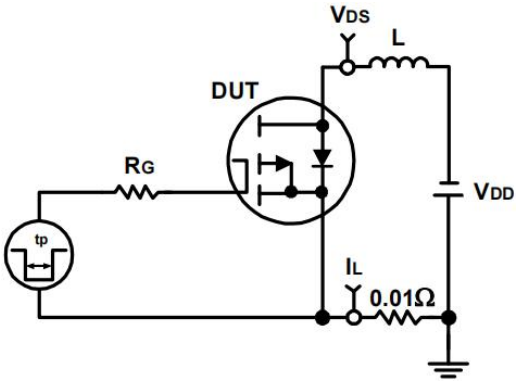

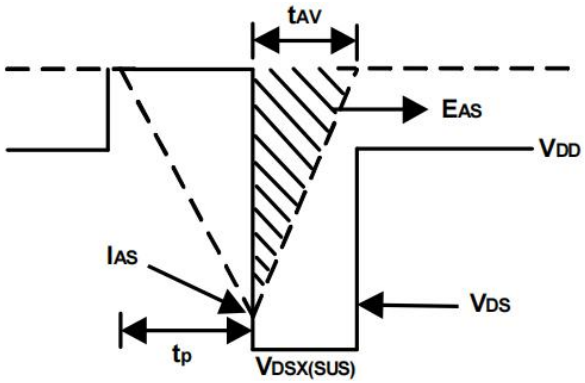

Switching Time Test Circuit and Waveforms

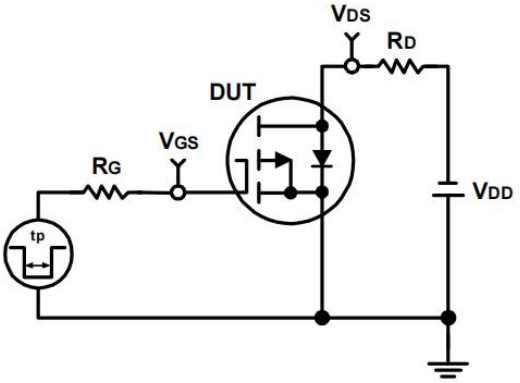

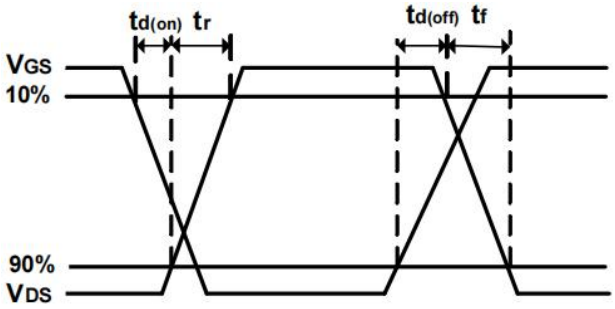

Physical Dimensions

SOP-8

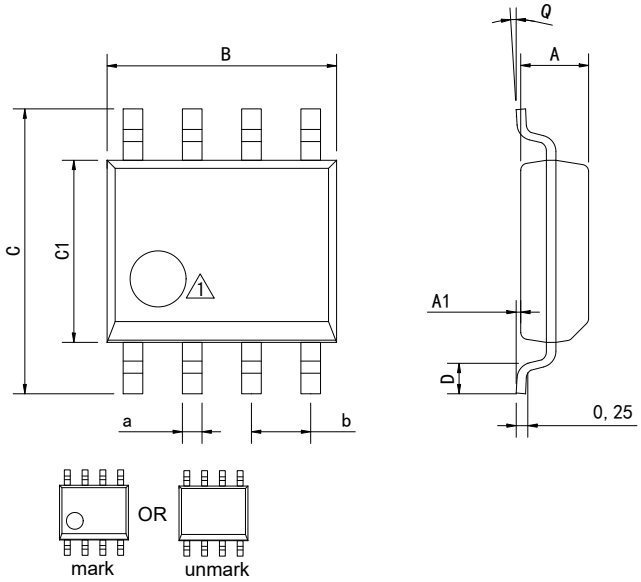

1 Package top mark may be in lower left corner or unmark

Dimensions In Millimeters(SOP-8)									
Symbol:	A	A1	B	C	C1	D	Q	a	b
Min:	1.35	0.05	4.90	5.80	3.80	0.40	0°	0.35	1.27 BSC
Max:	1.55	0.20	5.10	6.20	4.00	0.80	8°	0.45	

Revision History

REVISION NUMBER	DATE	REVISION	PAGE
V1.0	2012-5	New	1-10
V1.1	2019-9	Update encapsulation type、Add annotation for Maximum Ratings.	1、2
V1.2	2024-11	Add a model marking name、Update Lead Temperature	1、2
V1.3	2025-12	Update important statements、Update SOP-8 Dimension drawing	8、10

IMPORTANT STATEMENT:

Huaguan Semiconductor reserves the right to change products and services offered without prior notice. Customers should obtain the latest relevant information before placing orders and verify that such information is current and complete. Huaguan Semiconductor assumes no responsibility or liability for altered documents.

Customers are responsible for complying with safety standards and implementing safety measures when using Huaguan Semiconductor products in system design and end-product manufacturing. You assume full responsibility for: selecting the appropriate Huaguan Semiconductor products for your application; designing, validating, and testing your application; and ensuring that your application complies with applicable standards and all other safety, security, or other requirements. This is to prevent potential risks that may lead to personal injury or property damage.

Huaguan Semiconductor products are not approved for use in life support, military, aerospace, or other high-risk applications. Huaguan products are neither intended nor warranted for use in such systems or equipment. Any failure or malfunction may lead to personal injury or severe property damage. Such applications are deemed "Unsafe Use." Unsafe Use includes, but is not limited to: surgical and medical equipment, nuclear energy control equipment, aircraft or spacecraft instruments, control or operation of vehicle power, braking, or safety systems, traffic signal instruments, all types of safety devices, and any other applications intended to support or sustain life. Huaguan Semiconductor shall not be liable for consequences resulting from Unsafe Use in these fields. Users must independently evaluate and assume all risks. Any issues, liabilities, or losses arising from the use of products beyond their approved applications shall be solely borne by the user. Users may not claim any compensation from Huaguan Semiconductor based on these terms. If any third party claims against Huaguan Semiconductor due to such Unsafe Use, the user shall compensate Huaguan Semiconductor for all resulting damages and liabilities.

Huaguan Semiconductor provides technical and reliability data (including datasheets), design resources (including reference designs), application or other design advice, web tools, safety information, and other resources for its semiconductor products. However, no guarantee is made that these resources are free from defects, and no express or implied warranties are provided. The use of testing and other quality control techniques is limited to Huaguan Semiconductor's quality assurance scope. Not all parameters of each device are tested.

Huaguan Semiconductor's documentation authorizes you to use these resources only for developing applications related to the products described herein. You are not granted rights to any other intellectual property of Huaguan Semiconductor or any third party. Any other reproduction or display of these resources is strictly prohibited. You shall fully indemnify Huaguan Semiconductor and its agents against any claims, damages, costs, losses, and liabilities arising from your use of these resources. Huaguan Semiconductor shall not be held responsible.

ENTEGRECİ

Bu belge www.entegreci.com üzerinden sunulmaktadır.

Elektronik komponent tedarikinde Entegreci

Entegreci, Eskişehir merkezli, Türkiye geneline satış yapan bir elektronik komponent mağazasıdır. Entegreler (IC), mikrodenetleyiciler, transistörler, diyotlar, pasif elemanlar, konnektörler, modüller ve geliştirme kartları tek adetten seri üretim adetlerine kadar satılır. Ürün sayfalarında güncel stok durumunu, fiyatı ve datasheet bağlantısını bulabilirsiniz.

Parça koduyla arama

Üretici parça numarasını yazın; stok ve fiyatı hemen görün.

www.entegreci.com

Ürün kategorileri

Entegreden kapasitöre tüm elektronik komponent kategorileri.

Kategorilere göz atın

Üreticiler

Aradığınız üreticinin ürünlerini tek sayfada inceleyin.

Üreticileri görün

Toplu alım ve teklif

Listede olmayan ya da yüksek adetli parçalar için teklif isteyin.

Teklif isteyin

www.entegreci.com | **destek@entegreci.com** | **0850 305 90 34**

Entegreci is an online electronic components store based in Türkiye. Search by manufacturer part number to see stock, prices and datasheets for integrated circuits, microcontrollers, transistors, passive components and connectors, or request a quote for parts that are not listed.

Bu sayfa Entegreci tarafından eklenmiştir. Belgenin önceki sayfaları asıl yayıncısına aittir ve içeriği değiştirilmemiştir; en güncel sürüm için belgenin yayıncısına başvurun.