V_{DSS}	30	V
I_D	26	A
$R_{DS(ON)}$	10	mΩ

Features

Excellent gate charge x $R_{DS(on)}$ product(FOM)

$R_{DS(on).typ}$=10mΩ@V_{GS}=10V

High Reliability Capability

Application

Charger

DC/DC Converter

Ideal for high-frequency switching

GK xxx
T010N03

LOGO GK xxx CODE

T010N03

RDS(ON) VDSS

PDFN3X3- top&bottomview

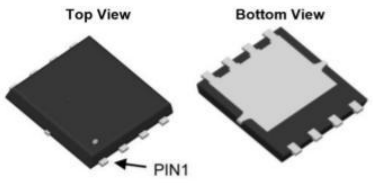

Equivalent Circuit

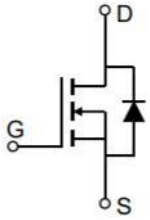

MAXIMUM RATINGS AND ELECTRICAL CHARACTERISTICS

Absolute Maximum Ratings (T_C=25℃ unless otherwise noted)

Parameter	Symbol	Value	Unit
Drain-source Voltage	V_{DS}	30	V
Continuous Drain Current T_C = 25°C T_C = 100°C	I_D	 26 22	A
Pulsed Drain Current	$I_{D\ pulse}$	104	A
Avalanche Energy, Single Pulse	E_{AS}	49	mJ
Gate-emitter Voltage	V_{GS}	±20	V
Power Dissipation, T_C = 25℃	P_D	31	W
Operating Junction And Storage Temperature	T_j , T_{stg}	-55~150	℃

Thermal Resistance

Parameter	Symbol	Typ	Max	Unit
Thermal Resistance, Junction to Case	R_{thJC}	-	4	℃/W
Thermal Resistance, Junction to Ambient	R_{thJA}	-	52	℃/W

Electrical Characteristics (T_J=25℃unless otherwise noted)

Parameter	Symbol	Test Condition	Value			Unit
			min.	typ.	max.	
Static Characteristic						
Drain-source Breakdown Voltage	$V_{(BR)DSS}$	V_{GS}=0V, I_D=250uA	30	-	-	V
Gate Threshold Voltage	$V_{GS(th)}$	V_{DS}=V_{GS}, I_D=250uA	1	1.5	2.4	
Zero Gate Voltage Drain Current	I_{DSS}	V_{DS}=30V, V_{GS}=0V	-	-	1	μA
Gate-source leakage current	I_{GSS}	V_{GS}=±20V, V_{DS}=0V	-	-	±100	nA
Drain-source on-state Resistance	$R_{DS(on)}$	V_{GS}=10V, I_D=20A	-	10	12	mΩ
Dynamic Characteristic						
Input Capacitance	C_{iss}	V_{GS}=0V,	-	810	-	pF
Output Capacitance	C_{oss}	V_{DS}=15V,	-	111	-	
Reverse Transfer Capacitance	C_{rss}	f=1MHz	-	84	-	
Gate Total Charge	Q_g	V_{GS}=10V,	-	6	-	nC
Gate-Source charge	Q_{gs}	V_{DS}=15V,	-	1	-	
Gate-Drain charge	Q_{gd}	I_D=10A	-	2	-	
Turn-on Delay Time	$t_{d(on)}$	V_{GS}=10V,	-	10	-	ns
Turn-on Rise Time	t_r	V_{DD}=15V,	-	12	-	
Turn-off Delay Time	$t_{d(off)}$	I_D=10A,	-	9	-	
Turn-off Fall Time	t_f	R_G=3Ω	-	6	-	
Body Diode Characteristic						
Body Diode Forward Voltage	V_{SD}	V_{GS}=0V,I_{SD}=10A	-	-	1.2	V
Reverse Recovery Time	t_{rr}	I_F=10A,	-	20	-	ns
Reverse Recovery Charge	Q_{rr}	dI_F/dt=100A/us	-	28	-	nC

RATING AND CHARACTERISTIC CURVES

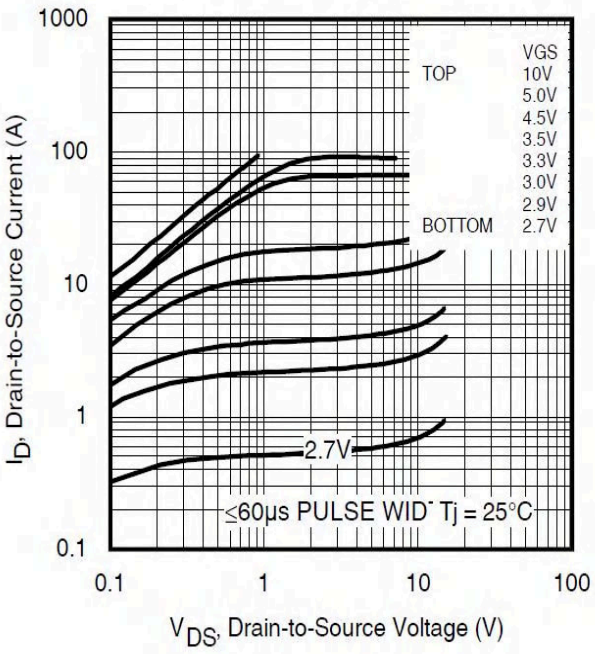

Fig 1. Typical Output Characteristics

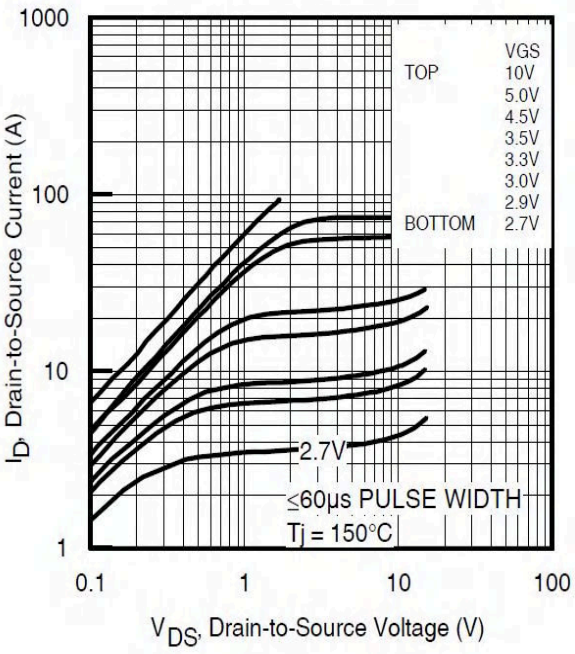

Fig 2. Typical Output Characteristics

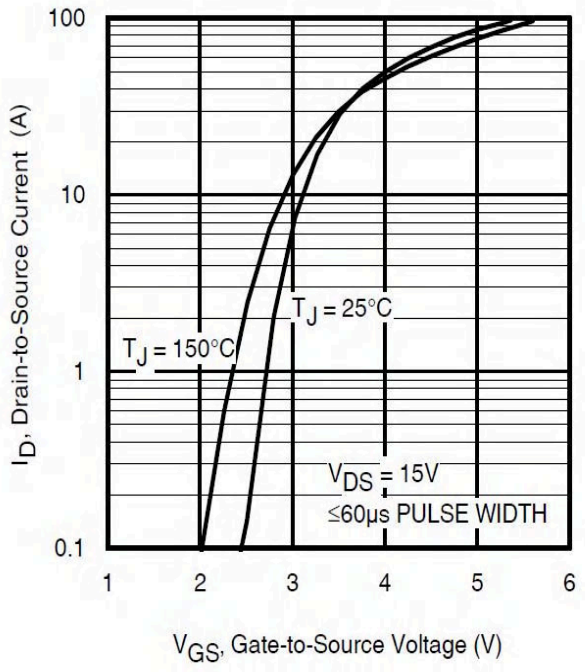

Fig 3. Typical Transfer Characteristics

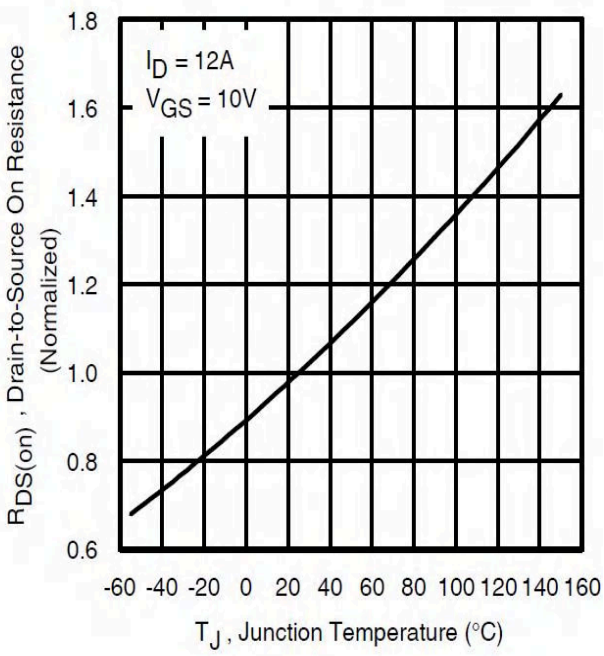

Fig 4. Normalized On-Resistance Vs. Temperature

RATING AND CHARACTERISTIC CURVES

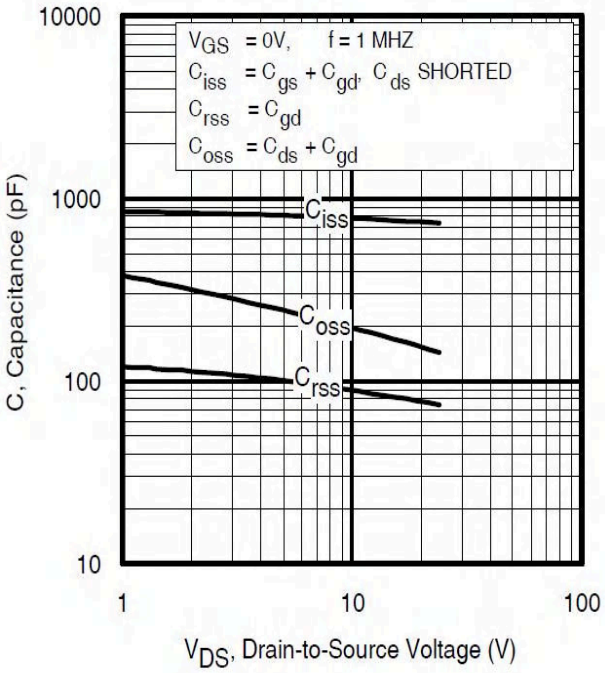

Fig 5. Typical Capacitance Vs. Drain-to-Source Voltage

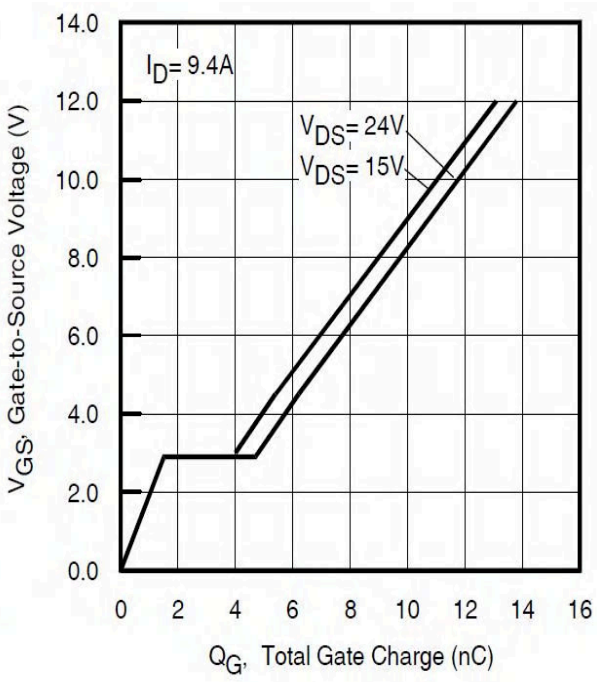

Fig 6. Typical Gate Charge Vs. Gate-to-Source Voltage

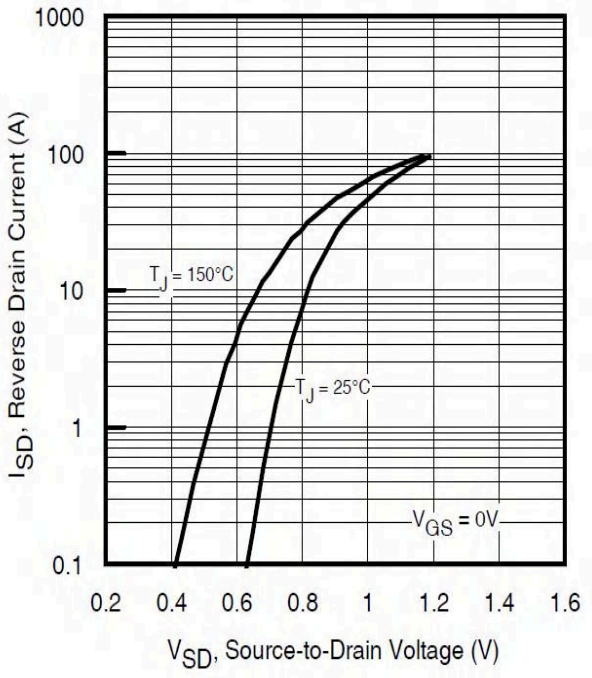

Fig 7. Typical Source-Drain Diode Forward Voltage

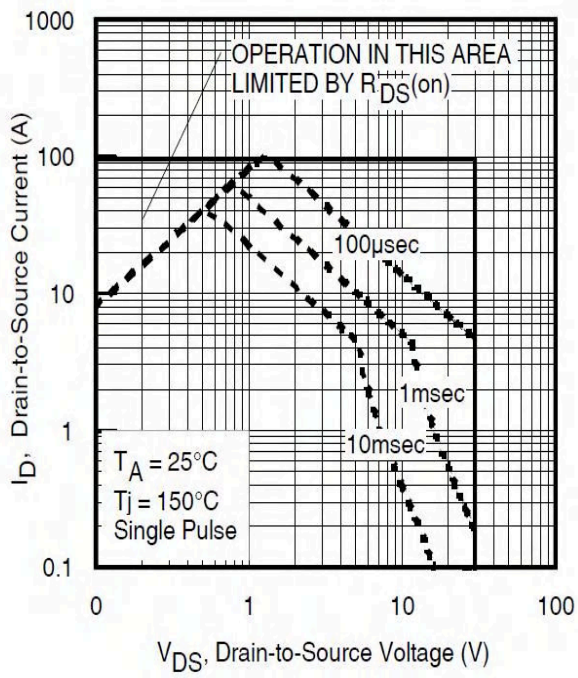

Fig 8. Maximum Safe Operating Area

RATING AND CHARACTERISTIC CURVES

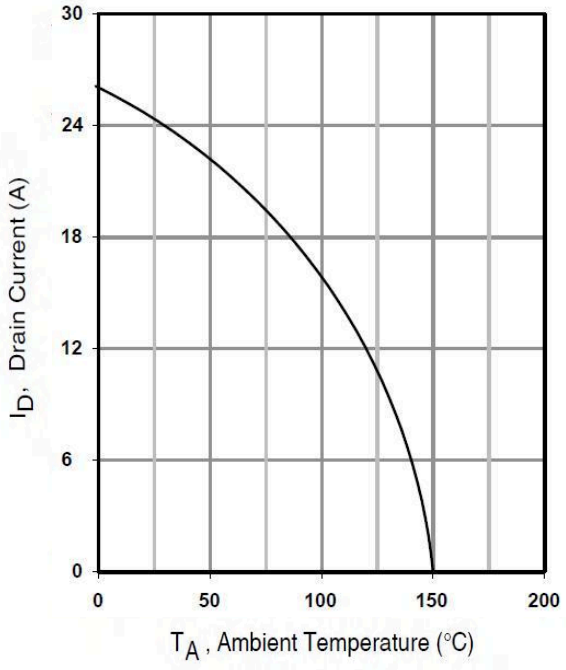

Fig 9. Maximum Drain Current Vs. Ambient Temperature

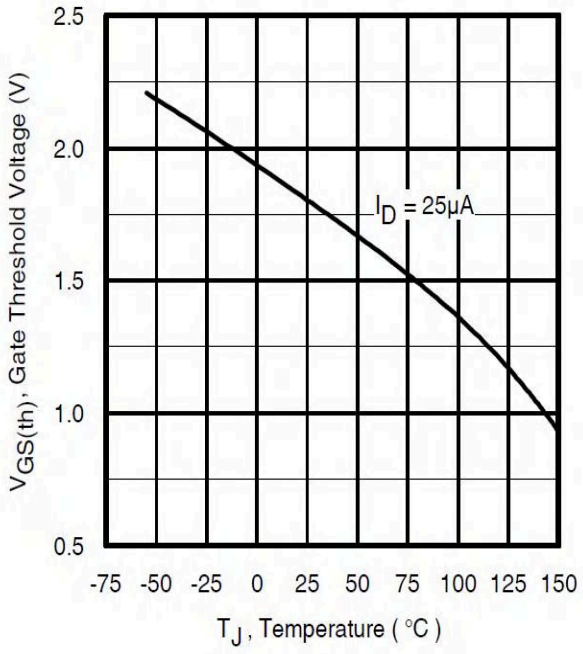

Fig 10. Threshold Voltage Vs. Temperature

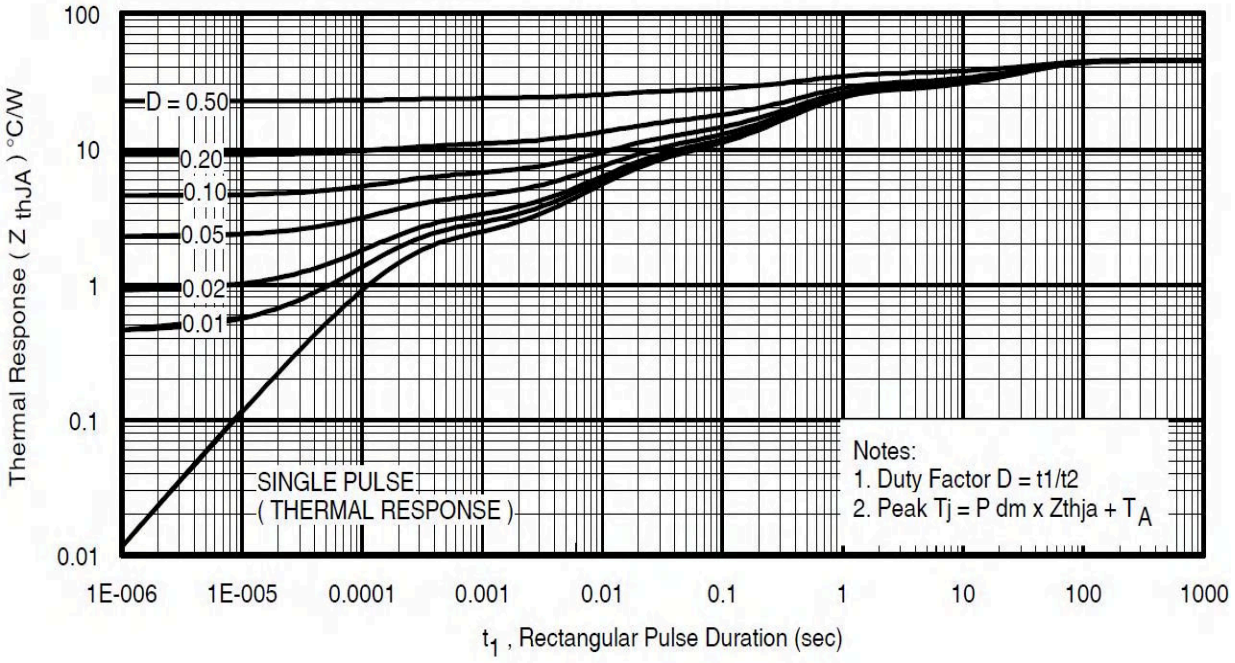

Fig 11. Maximum Effective Transient Thermal Impedance, Junction-to-Ambient

RATING AND CHARACTERISTIC CURVES

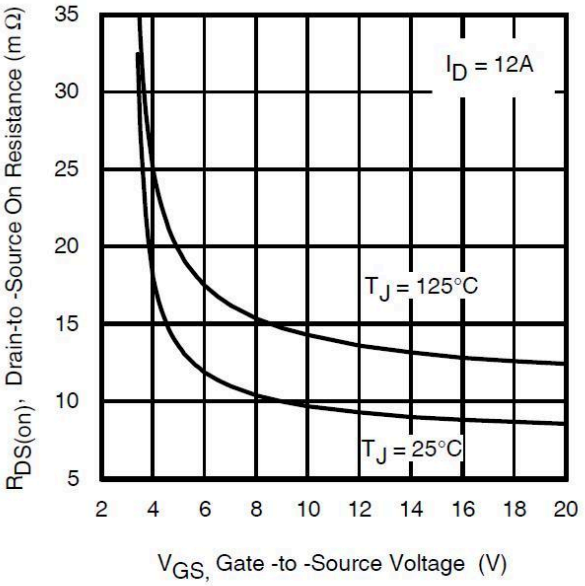

Fig 12. On-Resistance vs. Gate Voltage

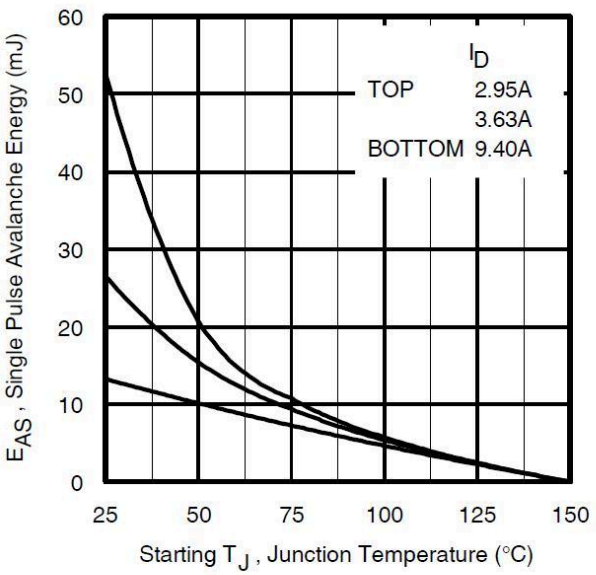

Fig 13. Maximum Avalanche Energy vs. Drain Current

Test Circuit & Waveform

Gate Charge Test Circuit & Waveform

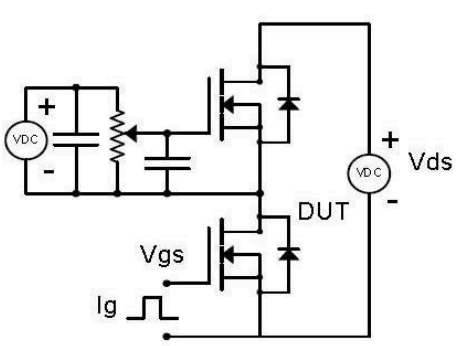

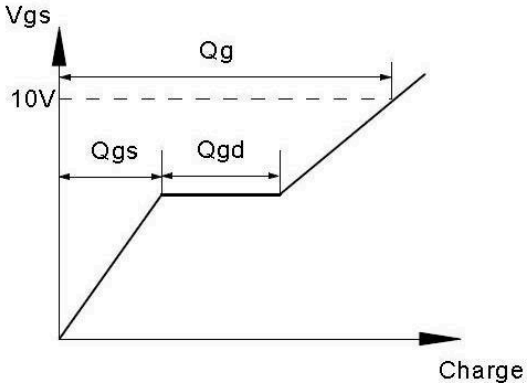

Resistive Switching Test Circuit & Waveforms

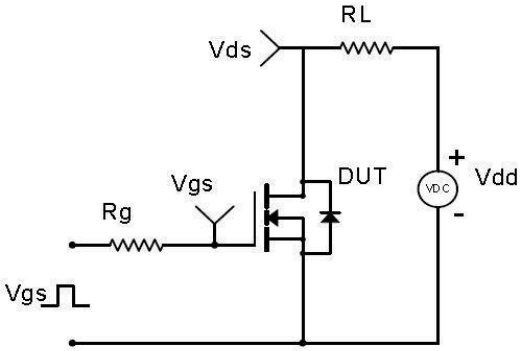

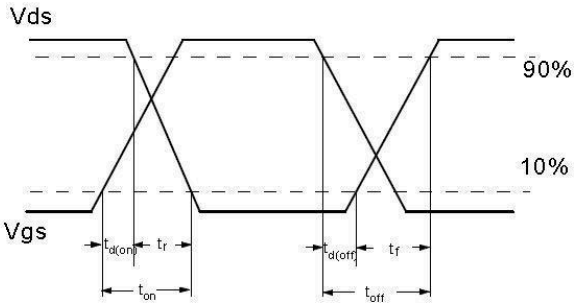

Unclamped Inductive Switching (UIS) Test Circuit & Waveforms

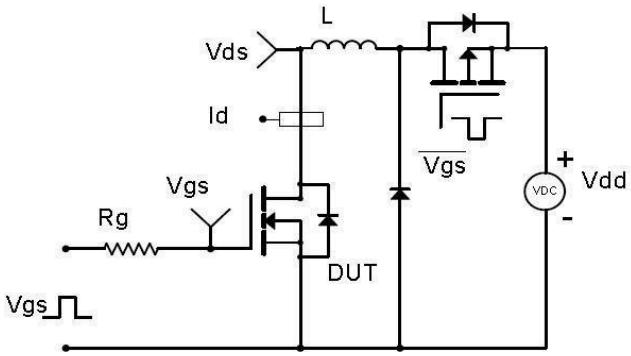

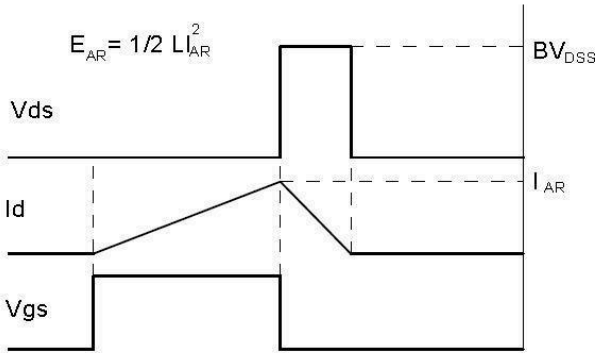

Diode Recovery Test Circuit & Waveforms

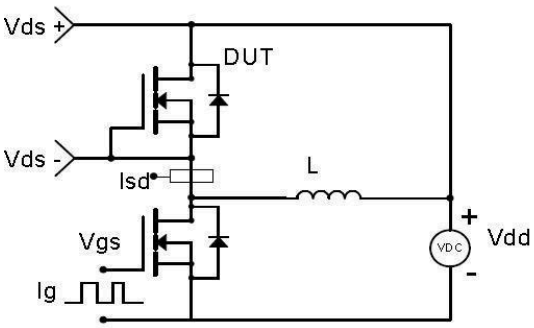

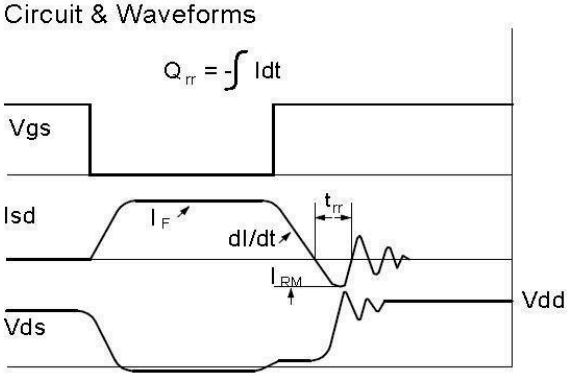

Soldering parameters

Reflow Condition		Pb-Free assembly (see as bellow)
Pre Heat	-Temperature Min ($T_{s(min)}$)	+150℃
	-Temperature Max($T_{s(max)}$)	+200℃
	-Time (Min to Max) (ts)	60-180 secs.
Average ramp up rate (Liquid us Temp (T_L) to peak)		3℃/sec. Max
$T_{s(max)}$ to T_L - Ramp-up Rate		3℃/sec. Max
Reflow	-Temperature(T_L)(Liquid us)	+217℃
	-Temperature(t_L)	60-150 secs.
Peak Temp (T_p)		+260(+0/-5)℃
Time within 5℃ of actual Peak Temp (t_p)		30 secs. Max
Ramp-down Rate		6℃/sec. Max
Time 25℃ to Peak Temp (T_P)		8 min. Max
Do not exceed		+260℃

FIG5: Reflow condition

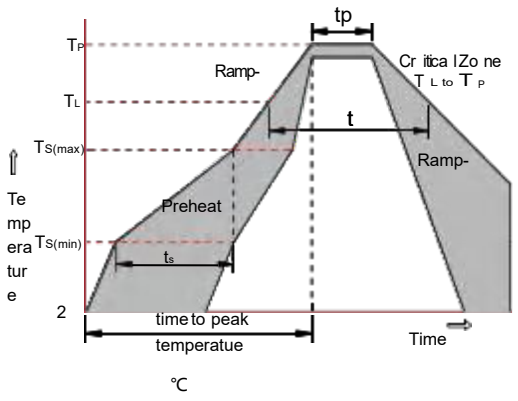

Package Dimensions & Suggested Pad Layout

PDFN3X3 Package Information

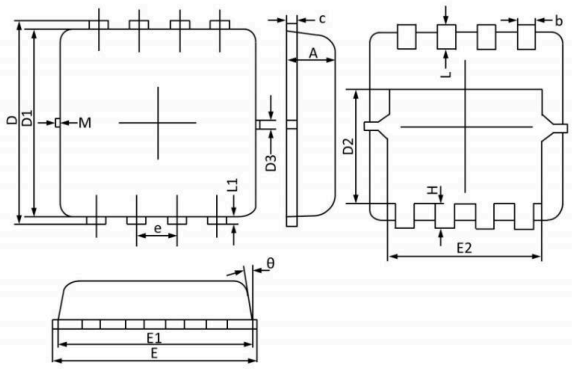

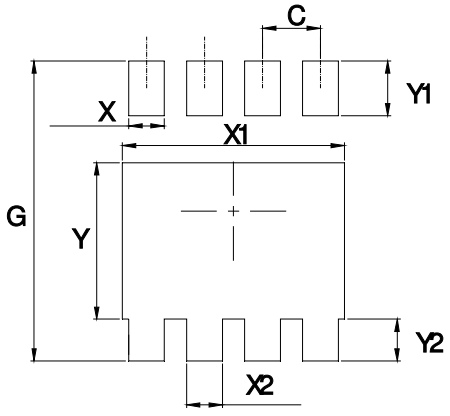

DIMENSIONS (unit : mm)

Symbol	Min	Typ	Max	Symbol	Min	Typ	Max
A	0.70	0.75	0.80	b	0.25	0.30	0.35
C	0.10	0.15	0.25	D	3.25	3.35	3.45
D1	3.00	3.10	3.20	D2	1.78	1.88	1.98
D3	--	0.13	--	E	3.20	3.30	3.40
E1	3.00	3.15	3.20	E2	2.39	2.49	2.59
e	0.65BSC			H	0.30	0.39	0.50
L	0.30	0.40	0.50	L1	--	0.13	--
θ	--	10°	12°	M	*	*	0.15

Dimensions	Value (in mm)
C	0.65
G	3.60
X	0.40
X1	2.60
X2	0.40
Y	1.95
Y1	0.62
Y2	0.55

Tape & rell specification

Tape

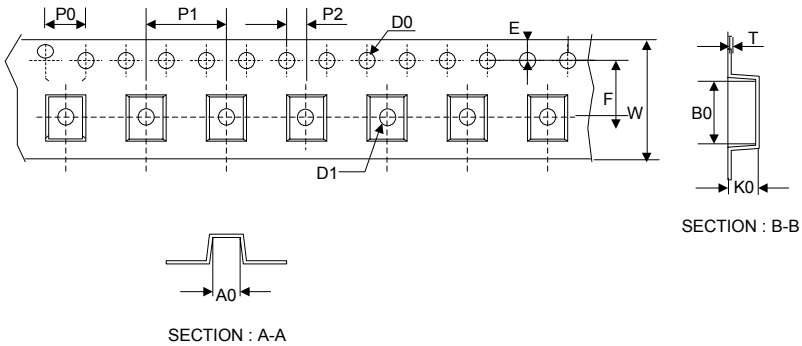

Symbol	Dimension (mm)
P0	4.00±0.20
P1	8.00±0.20
P2	2.00±0.20
D0	1.55±0.20
D1	1.55±0.20
E	1.75±0.20
F	5.50±0.20
W	12.00±0.20
A0	3.90±0.20
B0	3.80±0.20
K0	1.20±0.20
T	0.20±0.20

13” Reel

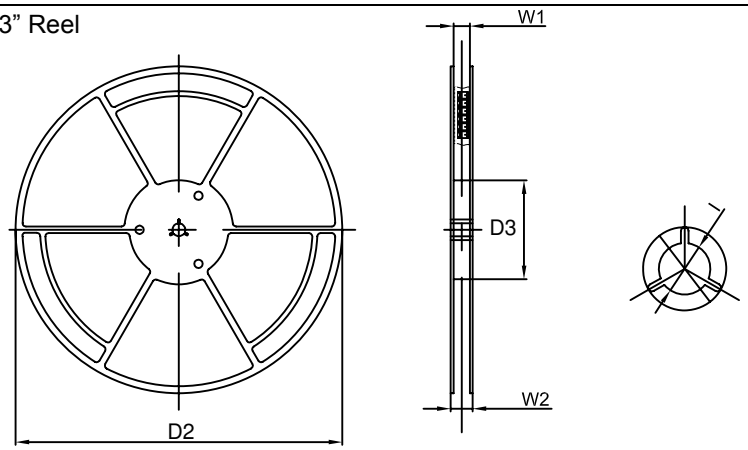

D2	330.0±5.0
D3	100.0±4.0
W1	12.0±5.0
W2	14.0±5.0
I	13.0±2.0

Quantity: 5000PCS

ENTEGRECİ

Bu belge www.entegreci.com üzerinden sunulmaktadır.

Elektronik komponent tedarikinde Entegreci

Entegreci, Eskişehir merkezli, Türkiye geneline satış yapan bir elektronik komponent mağazasıdır. Entegreler (IC), mikrodenetleyiciler, transistörler, diyotlar, pasif elemanlar, konnektörler, modüller ve geliştirme kartları tek adetten seri üretim adetlerine kadar satılır. Ürün sayfalarında güncel stok durumunu, fiyatı ve datasheet bağlantısını bulabilirsiniz.

Parça koduyla arama

Üretici parça numarasını yazın; stok ve fiyatı hemen görün.

www.entegreci.com

Ürün kategorileri

Entegreden kapasitöre tüm elektronik komponent kategorileri.

Kategorilere göz atın

Üreticiler

Aradığınız üreticinin ürünlerini tek sayfada inceleyin.

Üreticileri görün

Toplu alım ve teklif

Listede olmayan ya da yüksek adetli parçalar için teklif isteyin.

Teklif isteyin

www.entegreci.com | **destek@entegreci.com** | **0850 305 90 34**

Entegreci is an online electronic components store based in Türkiye. Search by manufacturer part number to see stock, prices and datasheets for integrated circuits, microcontrollers, transistors, passive components and connectors, or request a quote for parts that are not listed.

Bu sayfa Entegreci tarafından eklenmiştir. Belgenin önceki sayfaları asıl yayıncısına aittir ve içeriği değiştirilmemiştir; en güncel sürüm için belgenin yayıncısına başvurun.