V_{DSS}	40	V
I_D	50	A
$R_{DS(ON)}$	6.1	mΩ

Features

Uses advanced SGT technology

Extremely low $R_{DS(on)_typ}$=6.1mΩ@V_{gs}=10V

Excellent gate charge x RDS(on) product(FOM)

Application

Motor Drives

SR (Synchronous rectification)

DC/DC converter

General purpose applications

GK xxx
S006N04

LOGO — GK xxx — CODE

S006N04

RDS(ON) — VDSS

PDFN5X6-8L top&bottom view

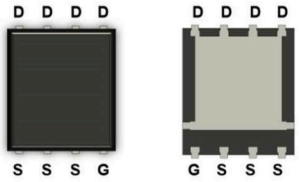

Equivalent Circuit

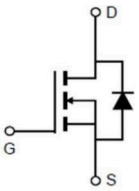

MAXIMUM RATINGS AND ELECTRICAL CHARACTERISTICS

Absolute Maximum Ratings (T_C=25℃ unless otherwise noted)

Parameter	Symbol	Value	Unit
Drain-source voltage	V_{DS}	40	V
Continuous drain current T_C = 25°C T_C = 100°C	I_D	50 35	A
Pulsed drain current T_C = 25°C, t_p limited by T_{jmax}	$I_{D\ pulse}$	200	
Avalanche energy, single pulse (L=0.5mH,Rg=25Ω)	E_{AS}	64	mJ
Gate-Source voltage	V_{GS}	±20	V
Power dissipation T_C = 25°C	P_D	31	W
Operating junction and storage temperature	T_j , T_{stg}	-55~150	℃

Thermal Resistance

Parameter	Symbol	Value	Unit
Thermal resistance, junction – case. Max	R_{thJC}	4.03	℃/W
Thermal resistance, junction – ambient. Max	R_{thJA}	58	

Electrical Characteristics (T_J=25℃unless otherwise noted)

Parameter	Symbol	Test Condition	Value			Unit
			min.	typ.	max.	
Static Characteristic						
Drain-source breakdown voltage	$V_{(BR)DSS}$	V_{GS}=0V, I_D=250uA	40	-	-	V
Gate threshold voltage	$V_{GS(th)}$	V_{DS}=V_{GS},I_D=250uA T_j=25°C	1.2	1.6	2.2	V
Zero gate voltage drain current	I_{DSS}	V_{DS}=40V,V_{GS}=0V T_j=25°C	-		1	μA
Gate-source leakage current	I_{GSS}	V_{GS}=20V,V_{DS}=0V	-	-	100	nA
Drain-source on-state resistance	$R_{DS(on)}$	V_{GS}=10V, I_D=25A, T_j=25°C	-	6.1	7.5	mΩ
		V_{GS}=4.5V, I_D=25A, T_j=25°C	-	8.5	10.1	
Transconductance	g_{fs}	V_{DS}=5V,I_D=25A	-	84	-	S
Dynamic Characteristic						
Input Capacitance	C_{iss}	V_{GS}=0V, V_{DS}=20V, f=1MHz	-	2133	-	pF
Output Capacitance	C_{oss}		-	699	-	
Reverse Transfer Capacitance	C_{rss}		-	23	-	
Gate Total Charge	Q_G	V_{GS}=10V, V_{DS}=20V, I_D=50A	-	17	-	nC
Gate-Source charge	Q_{gs}		-	7	-	
Gate-Drain charge	Q_{gd}		-	2	-	
Turn-on delay time	$t_{d(on)}$	T_j=25°C, V_{GS}=10V, V_{DS}=40V, R_L=3.5Ω	-	8	-	ns
Rise time	t_r		-	24	-	
Turn-off delay time	$t_{d(off)}$		-	13	-	
Fall time	t_f		-	6	-	
Gate resistance	R_G	V_{GS}=0V, V_{DS}=0V, f=1MHz	-	4	-	Ω
Body Diode Characteristic						
Body Diode Forward Voltage	V_{SD}	V_{GS}=0V,I_{SD}=25A	-	-	1.2	V
Body Diode Reverse Recovery Time	t_{rr}	I_F=25A, dI/dt=500A/μs	-	18	-	ns
Body Diode Reverse Recovery Charge	Q_{rr}	I_F=25A, dI/dt=500A/μs	-	5	-	nC

RATING AND CHARACTERISTIC CURVES

Fig 1: Output Characteristics

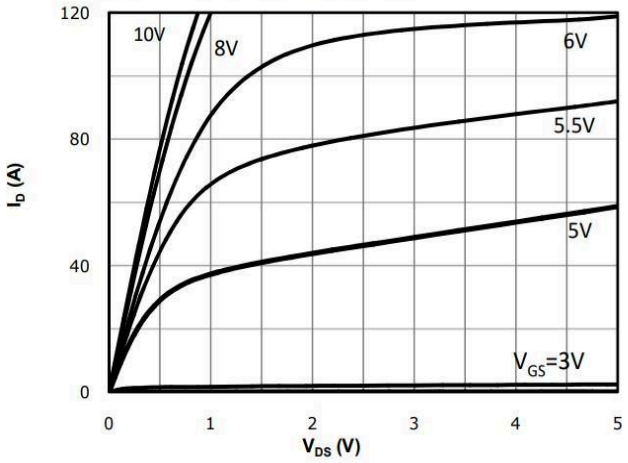

Fig 2: Transfer Characteristics

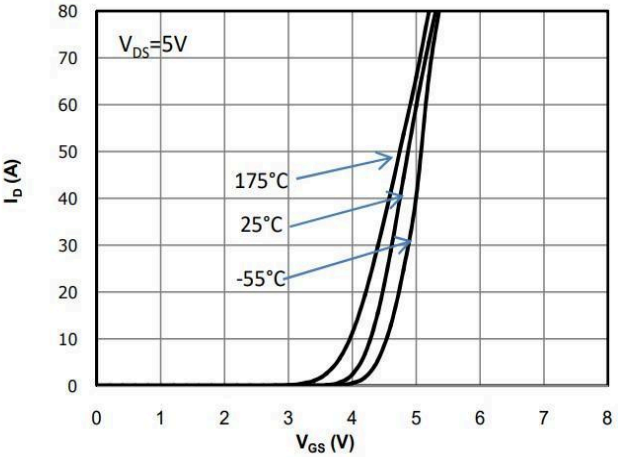

Fig 3: Rds(on) vs Drain Current and Gate Voltage

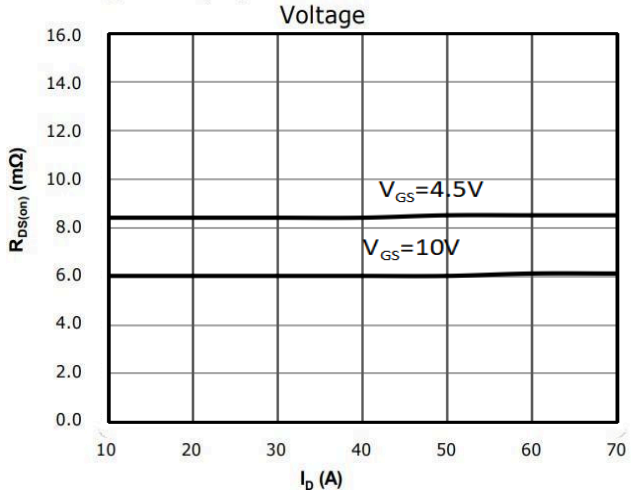

Fig 4: Rds(on) vs Gate Voltage

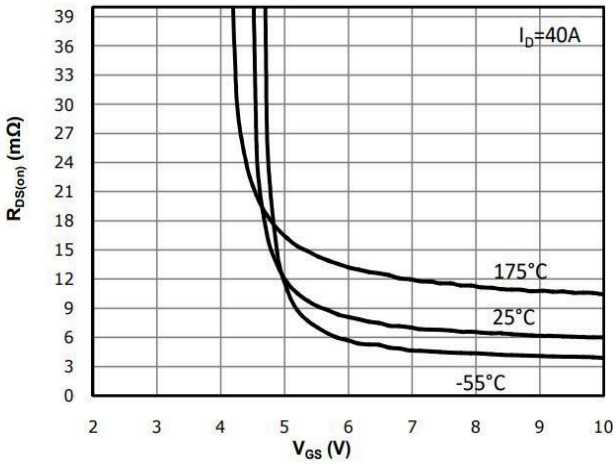

Fig 5: Rds(on) vs. Temperature

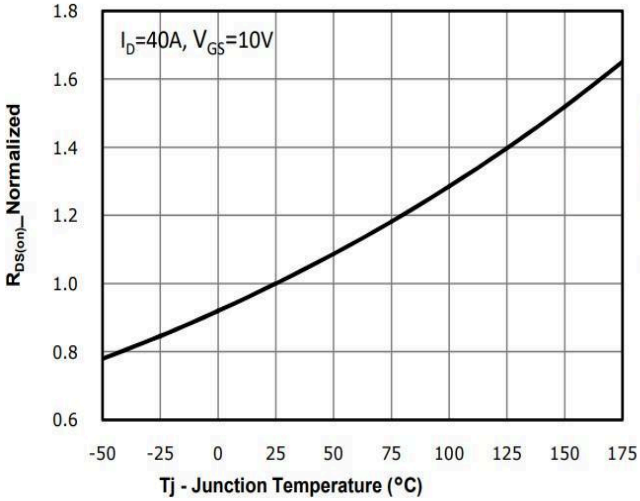

Fig 6: Vgs(th) vs. Temperature

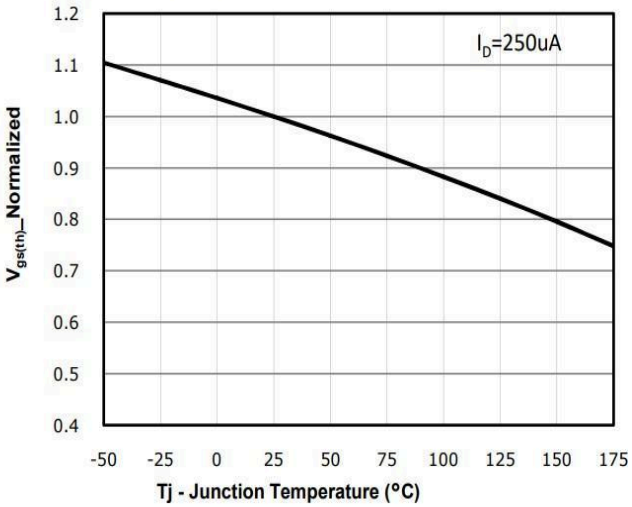

RATING AND CHARACTERISTIC CURVES

Fig 7: BVdss vs. Temperature

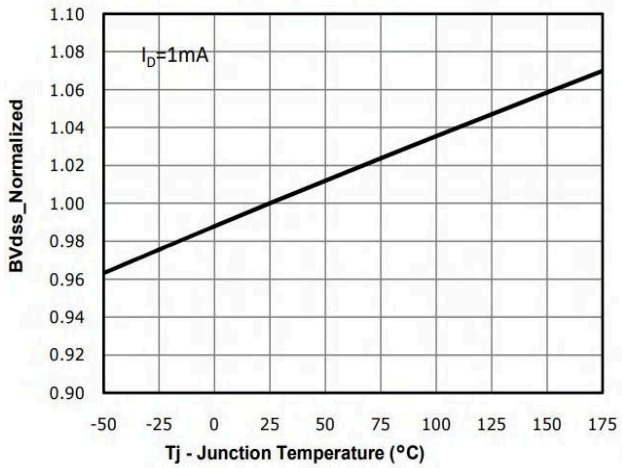

Fig 8: Capacitance Characteristics

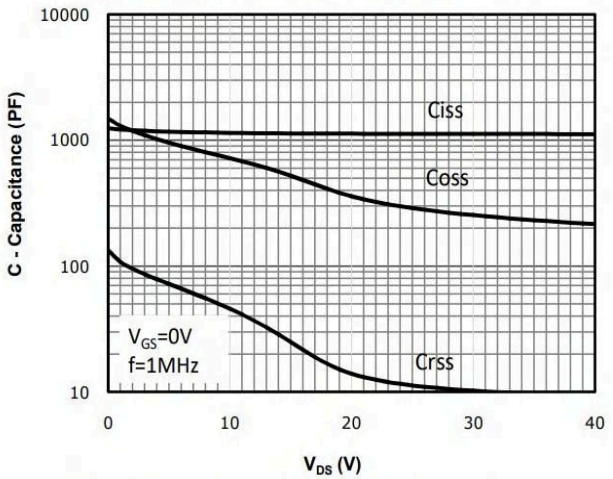

Fig 9: Gate Charge Characteristics

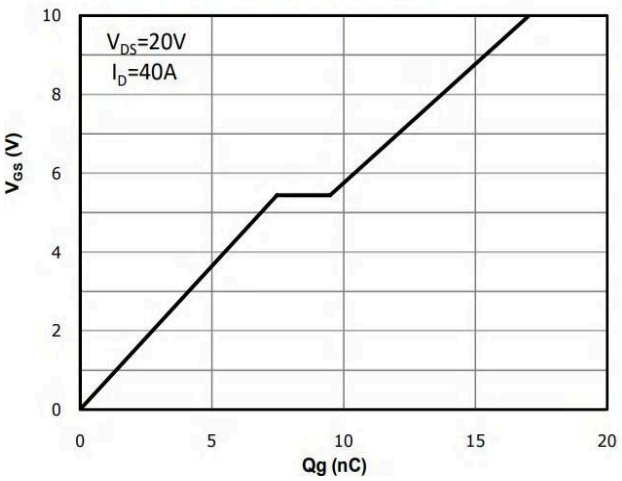

Fig 10: Body-diode Forward Characteristics

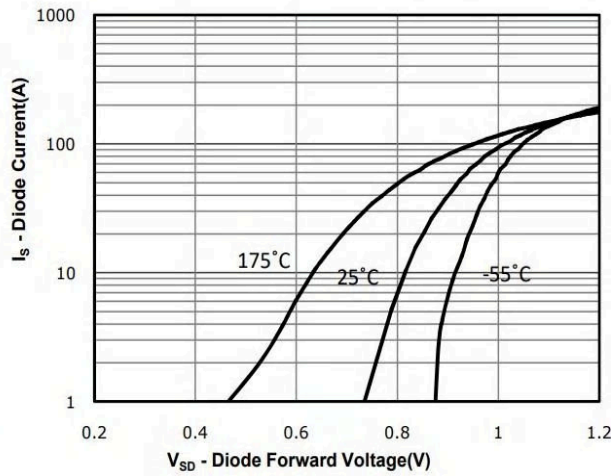

Fig 11: Power Dissipation

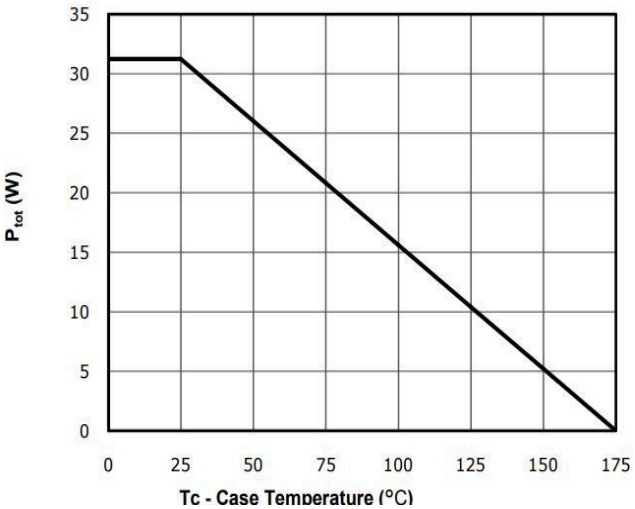

Fig 12: Drain Current Derating

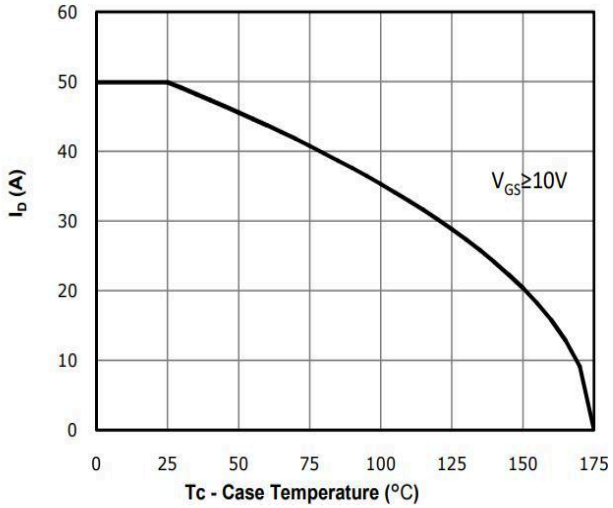

RATING AND CHARACTERISTIC CURVES

Fig 13: Safe Operating Area

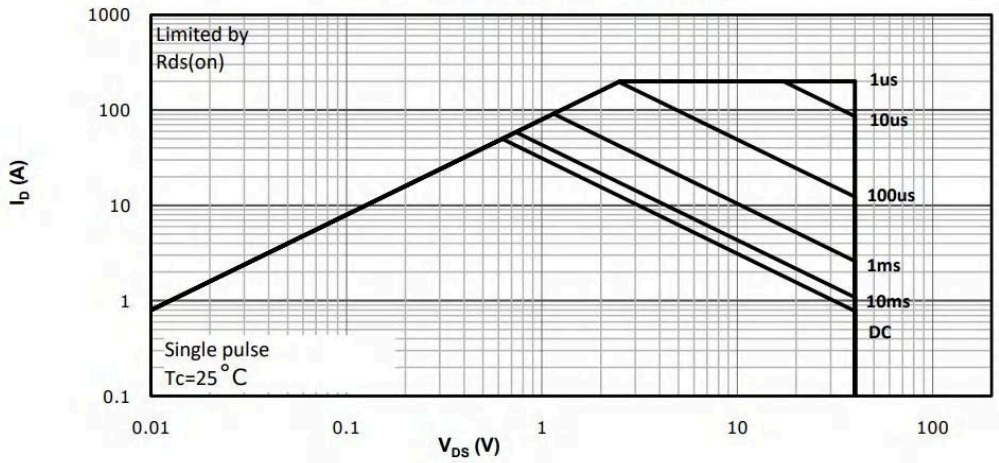

Fig 14: Max. Transient Thermal Impedance

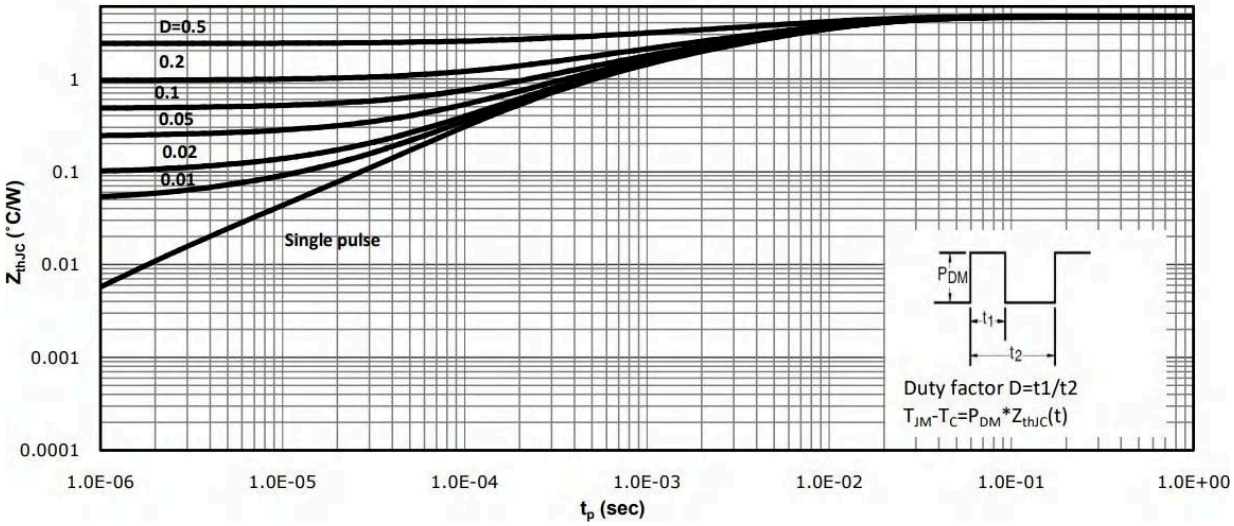

Test Circuit & Waveform

Gate Charge Test Circuit & Waveform

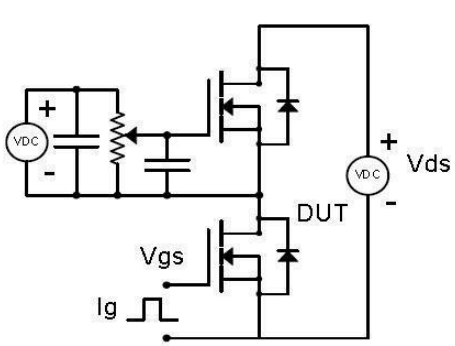

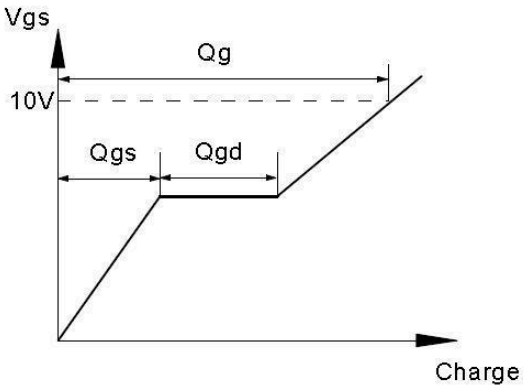

Resistive Switching Test Circuit & Waveforms

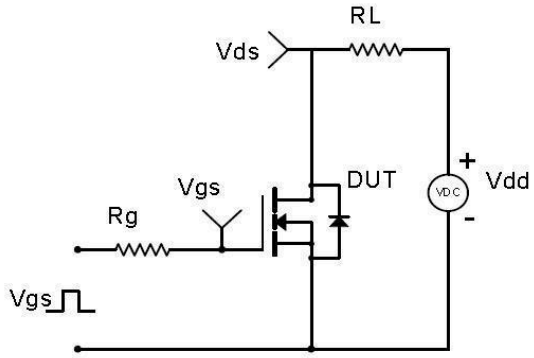

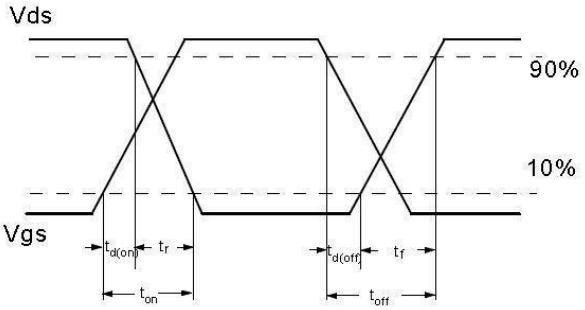

Unclamped Inductive Switching (UIS) Test Circuit & Waveforms

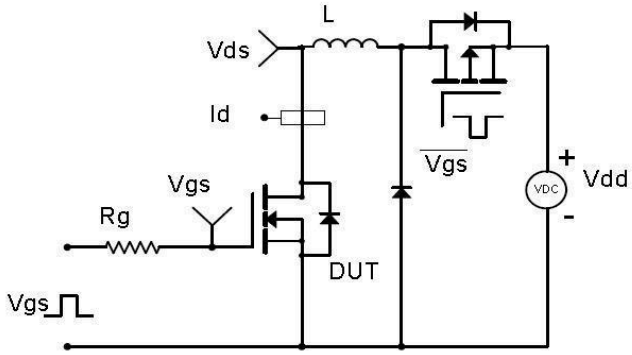

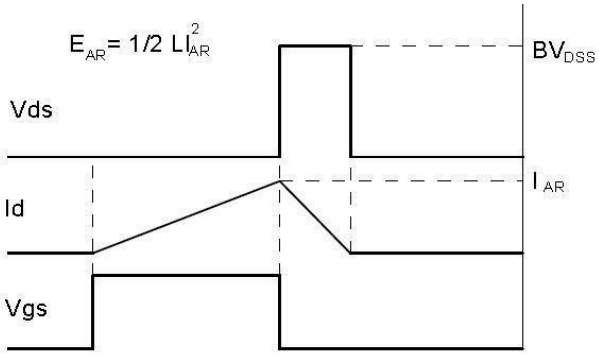

Diode Recovery Test Circuit & Waveforms

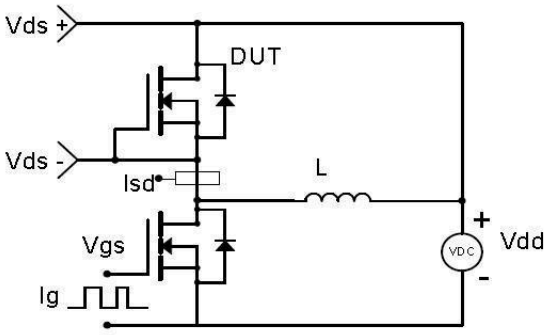

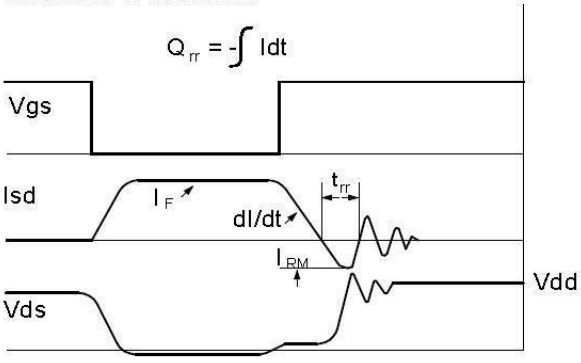

Soldering parameters

Reflow Condition		Pb-Free assembly (see as bellow)
Pre Heat	-Temperature Min ($T_{s(min)}$)	+150℃
	-Temperature Max($T_{s(max)}$)	+200℃
	-Time (Min to Max) (ts)	60-180 secs.
Average ramp up rate (Liquid us Temp (T_L) to peak)		3℃/sec. Max
$T_{s(max)}$ to T_L - Ramp-up Rate		3℃/sec. Max
Reflow	-Temperature(T_L)(Liquid us)	+217℃
	-Temperature(t_L)	60-150 secs.
Peak Temp (T_p)		+260(+0/-5)℃
Time within 5℃ of actual Peak Temp (t_p)		30 secs. Max
Ramp-down Rate		6℃/sec. Max
Time 25℃ to Peak Temp (T_P)		8 min. Max
Do not exceed		+260℃

FIG5: Reflow condition

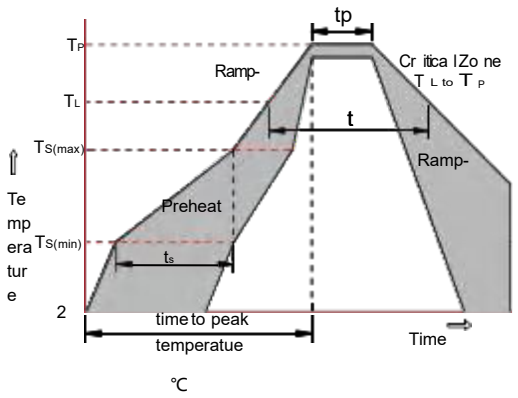

Package Dimensions & Suggested Pad Layout

PDFN5*6

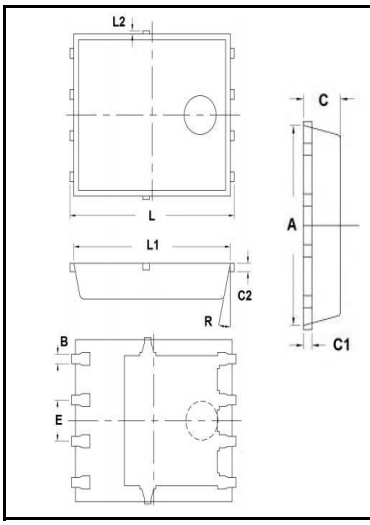

Dim.	Min.	Max.
A	4.8	5.2
B	0.25	0.35
C	1	1.2
C1	Typ0.254	
C2	Typ0.254	
E	Typ1.27	
L	6	6.3
L1	5.7	6
L2	Max0.2	
R	Typ13°	

All Dimensions in millimeter

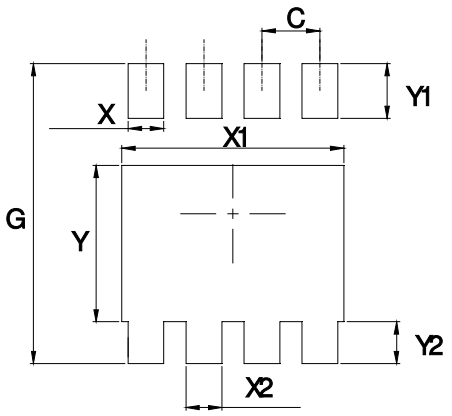

Dimensions	Value (in mm)
C	1.27
G	6.45
X	0.62
X1	4.50
X2	0.62
Y	3.70
Y1	1.05
Y2	0.80

Tape & rell specification

Tape

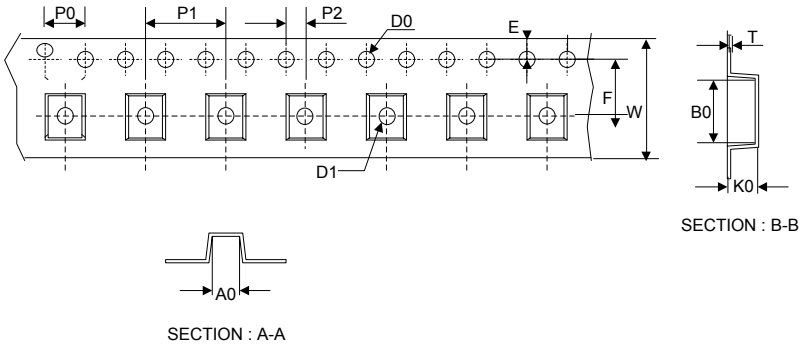

Symbol	Dimension (mm)
P0	4.00±0.20
P1	8.00±0.20
P2	2.00±0.20
D0	1.55±0.20
D1	1.55±0.20
E	1.75±0.20
F	5.50±0.20
W	12.00±0.20
A0	6.60±0.20
B0	5.70±0.20
K0	1.30±0.20
T	0.20±0.20

13” Reel

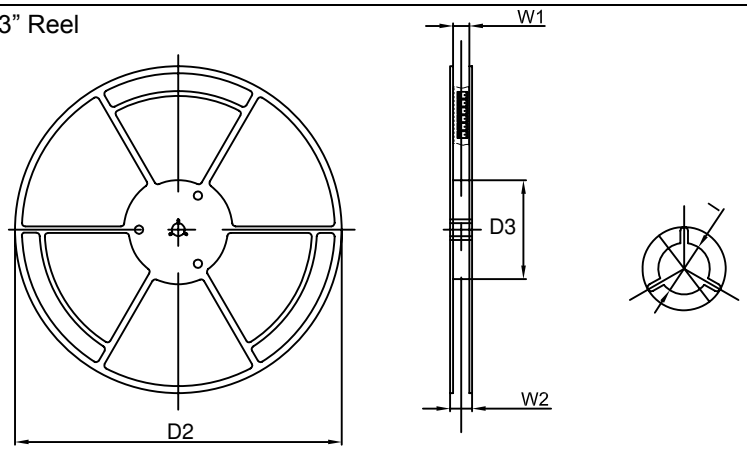

D2	330.0±5.0
D3	100.0±4.0
W1	12.0±5.0
W2	14.0±5.0
I	13.0±2.0

Quantity: 5000PCS

ENTEGRECİ

Bu belge www.entegreci.com üzerinden sunulmaktadır.

Elektronik komponent tedarikinde Entegreci

Entegreci, Eskişehir merkezli, Türkiye geneline satış yapan bir elektronik komponent mağazasıdır. Entegreler (IC), mikrodenetleyiciler, transistörler, diyotlar, pasif elemanlar, konnektörler, modüller ve geliştirme kartları tek adetten seri üretim adetlerine kadar satılır. Ürün sayfalarında güncel stok durumunu, fiyatı ve datasheet bağlantısını bulabilirsiniz.

Parça koduyla arama

Üretici parça numarasını yazın; stok ve fiyatı hemen görün.

www.entegreci.com

Ürün kategorileri

Entegreden kapasitöre tüm elektronik komponent kategorileri.

Kategorilere göz atın

Üreticiler

Aradığınız üreticinin ürünlerini tek sayfada inceleyin.

Üreticileri görün

Toplu alım ve teklif

Listede olmayan ya da yüksek adetli parçalar için teklif isteyin.

Teklif isteyin

www.entegreci.com | **destek@entegreci.com** | **0850 305 90 34**

Entegreci is an online electronic components store based in Türkiye. Search by manufacturer part number to see stock, prices and datasheets for integrated circuits, microcontrollers, transistors, passive components and connectors, or request a quote for parts that are not listed.

Bu sayfa Entegreci tarafından eklenmiştir. Belgenin önceki sayfaları asıl yayıncısına aittir ve içeriği değiştirilmemiştir; en güncel sürüm için belgenin yayıncısına başvurun.