# G2306

## 30V/5.0A N Channel Advanced Power MOSFET

### Features

- *Low $R_{DS(on)}$ @$V_{GS}$=10V*
- *5V Logic Level Control*
- *N Channel SOT23 Package*
- *Pb−Free, RoHS Compliant*

| $V_{(BR)DSS}$ | $R_{DS(ON)}$ Typ | $I_D$ Max |
|---|---|---|
| 30V | 28mΩ @10V | 5.0A |
| | 38mΩ @4.5V | |

### Applications

- DC-to-DC converters
- Power management in battery-driven portables
- Low-side load switch
- Switching circuits
- High-speed line driver

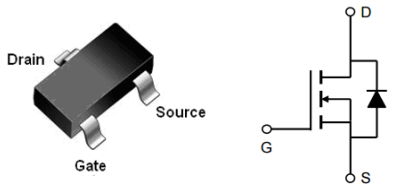


**SOT-23**

### Order Information

| Product | Package | Marking | Packing | Min Unit Quantity |
|---|---|---|---|---|
| G2306 | SOT-23 | A6SHB | 3000PCS/Reel | 3000PCS |

### Absolute Maximum Ratings

Stresses exceeding Maximum Ratings may damage the device. Maximum Ratings are stress ratings only. Functional operation above the Recommended Operating Conditions is not implied. Extended exposure to stresses above the Recommended Operating Conditions may affect device reliability.

| Symbol | Parameter | | Rating | Unit |
|---|---|---|---|---|
| **Common Ratings ($T_A$=25°C Unless Otherwise Noted)** | | | | |
| $V_{GS}$ | Gate-Source Voltage | | ±20 | V |
| $V_{(BR)DSS}$ | Drain-Source Breakdown Voltage | | 30 | V |
| $T_J$ | Maximum Junction Temperature | | 150 | °C |
| $T_{STG}$ | Storage Temperature Range | | -50 to 150 | °C |
| Mounted on Large Heat Sink | | | | |
| $I_{DM}$ | Pulse Drain Current Tested① | $T_A$=25°C | 20.4 | A |
| $I_D$ | Continuous Drain Current | $T_A$=25°C | 5.0 | A |
| | | $T_A$=70°C | 4 | |
| $P_D$ | Maximum Power Dissipation | $T_A$=25°C | 1.5 | W |
| | | $T_A$=70°C | 0.9 | |
| $R_{\theta JA}$ | Thermal Resistance Junction-Ambient | | 80 | °C/W |

| Symbol | Parameter | Condition | Min | Typ | Max | Unit |
|---|---|---|---|---|---|---|
| **Static Electrical Characteristics @ $T_J$ = 25°C (unless otherwise stated)** | | | | | | |
| $V_{(BR)DSS}$ | Drain-Source Breakdown Voltage | $V_{GS}$=0V $I_D$=250μA | 30 | -- | -- | V |
| $I_{DSS}$ | Zero Gate Voltage Drain Current($T_A$=25℃) | $V_{DS}$=30V, $V_{GS}$=0V | -- | -- | 1 | μA |
| | Zero Gate Voltage Drain Current($T_A$=125℃) | $V_{DS}$=24V, $V_{GS}$=0V | -- | -- | 100 | uA |
| $I_{GSS}$ | Gate-Body Leakage Current | $V_{GS}$=±20V, $V_{DS}$=0V | -- | -- | ±100 | nA |
| $V_{GS(TH)}$ | Gate Threshold Voltage | $V_{DS}$=$V_{GS}$, $I_D$=250μA | 1.0 | 1.6 | 2.5 | V |
| $R_{DS(ON)}$ | Drain-Source On-State Resistance② | $V_{GS}$=10V, $I_D$=4A | -- | 28 | 36 | mΩ |
| $R_{DS(ON)}$ | Drain-Source On-State Resistance② | $V_{GS}$=4.5V, $I_D$=3A | -- | 38 | 50 | mΩ |
| **Dynamic Electrical Characteristics @ $T_J$ = 25°C (unless otherwise stated)** | | | | | | |
| $C_{iss}$ | Input Capacitance | $V_{DS}$=15V, $V_{GS}$=0V, f=1MHz | -- | 240 | -- | pF |
| $C_{oss}$ | Output Capacitance | | -- | 35 | -- | pF |
| $C_{rss}$ | Reverse Transfer Capacitance | | -- | 30 | -- | pF |
| $Q_g$ | Total Gate Charge | $V_{DS}$=15V $I_D$=4A, $V_{GS}$=10V | -- | 6 | -- | nC |
| $Q_{gs}$ | Gate Source Charge | | -- | 0.5 | -- | nC |
| $Q_{gd}$ | Gate Drain Charge | | -- | 1.3 | -- | nC |
| **Switching Characteristics** | | | | | | |
| $t_{d(on)}$ | Turn on Delay Time | $V_{DD}$=15V, $I_D$=1A, $R_G$=3.3Ω, $V_{GS}$=10V | -- | 4.4 | -- | ns |
| $t_r$ | Turn on Rise Time | | -- | 2.6 | -- | ns |
| $t_{d(off)}$ | Turn Off Delay Time | | - | 25.5 | -- | ns |
| $t_f$ | Turn Off Fall Time | | -- | 3.3 | -- | ns |
| **Source Drain Diode Characteristics** | | | | | | |
| $I_{SD}$ | Source drain current(Body Diode) | $T_A$=25℃ | -- | -- | 1.8 | A |
| $V_{SD}$ | Forward on voltage② | $T_j$=25℃, $I_{SD}$=4A, $V_{GS}$=0V | -- | 0.85 | 1.2 | V |

Notes: ① Pulse width limited by maximum allowable junction temperature

②Pulse test ; Pulse width≤300μs, duty cycle≤2%.

# G2306

**30V/5.0A N Channel Advanced Power MOSFET**

## Typical Characteristics

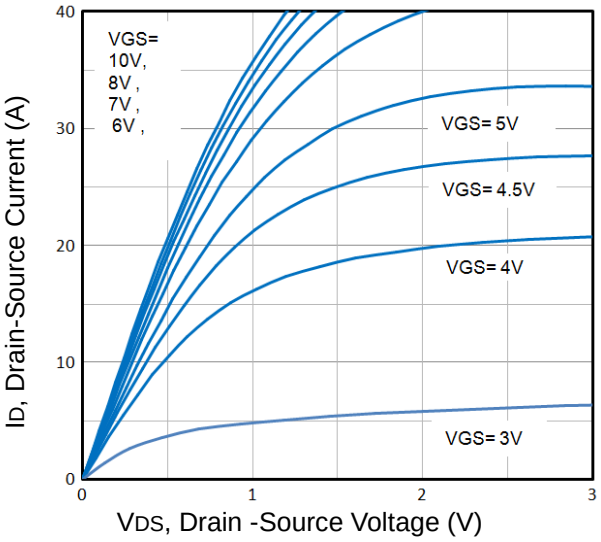


**Fig1.** Typical Output Characteristics

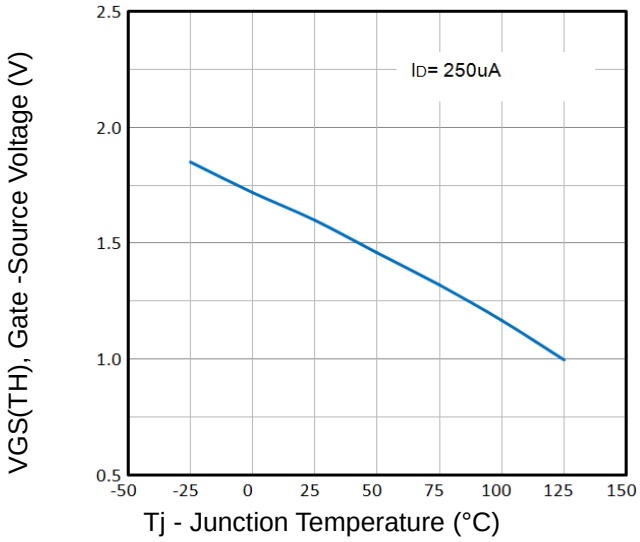


**Fig2.** Normalized Threshold Voltage Vs. Temperature

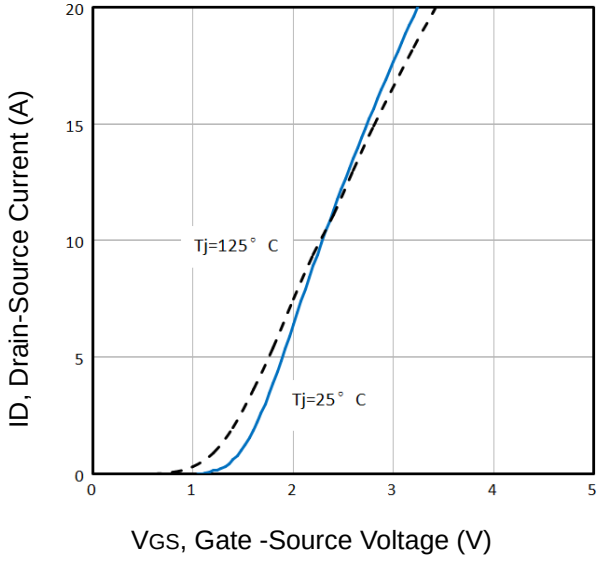


**Fig3.** Typical Transfer Characteristics

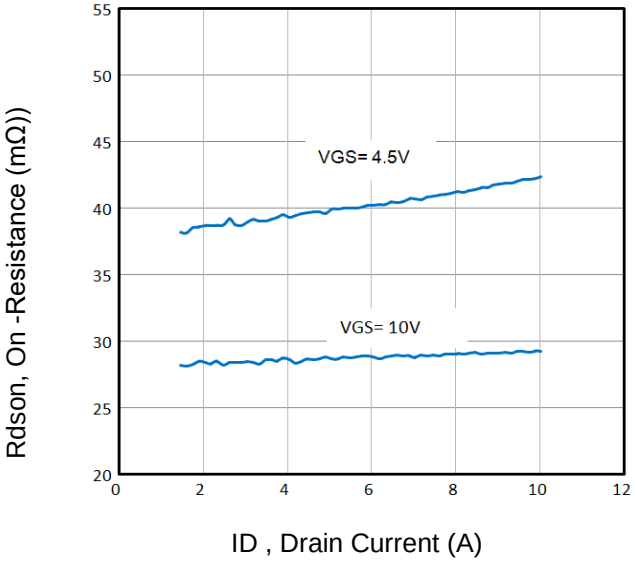


**Fig4.** On-Resistance vs. Drain Current and Gate

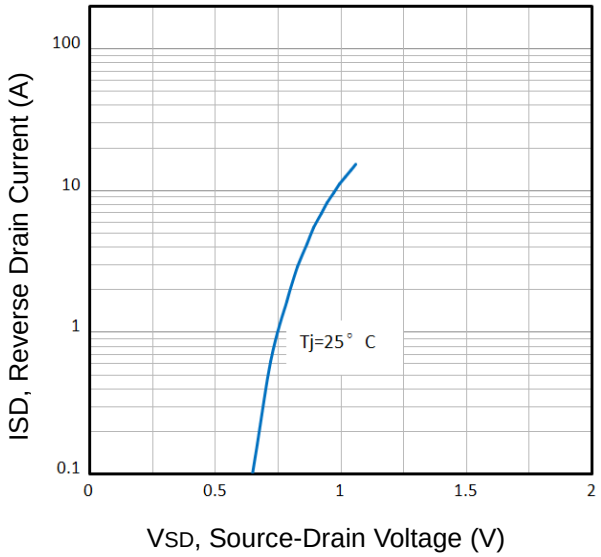


**Fig5.** Typical Source-Drain Diode Forward Voltage

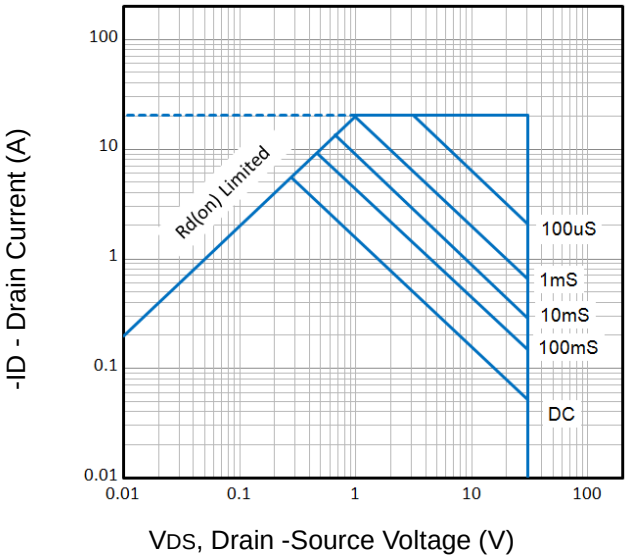


**Fig6.** Maximum Safe Operating Area

## Typical Characteristics

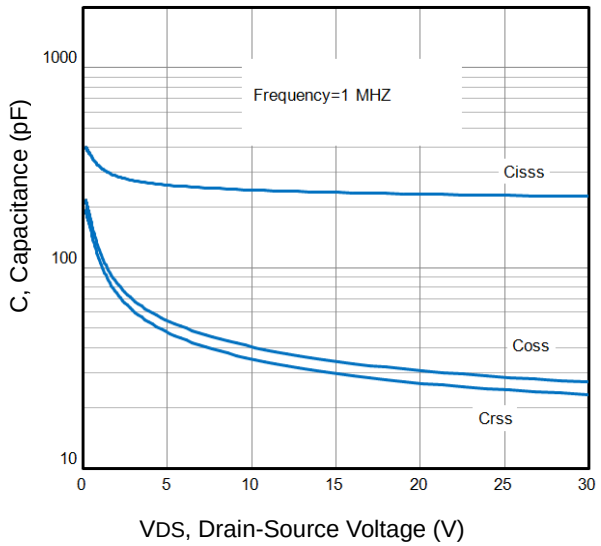


**Fig7.** Typical Capacitance Vs. Drain-Source Voltage

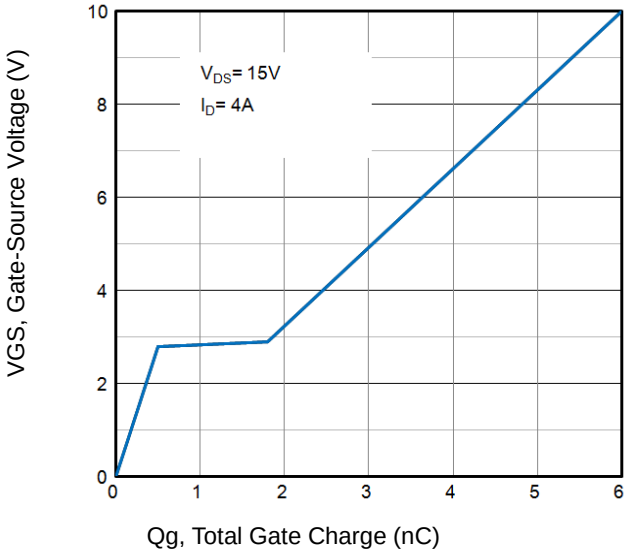


**Fig8.** Typical Gate Charge Vs. Gate-Source Voltage

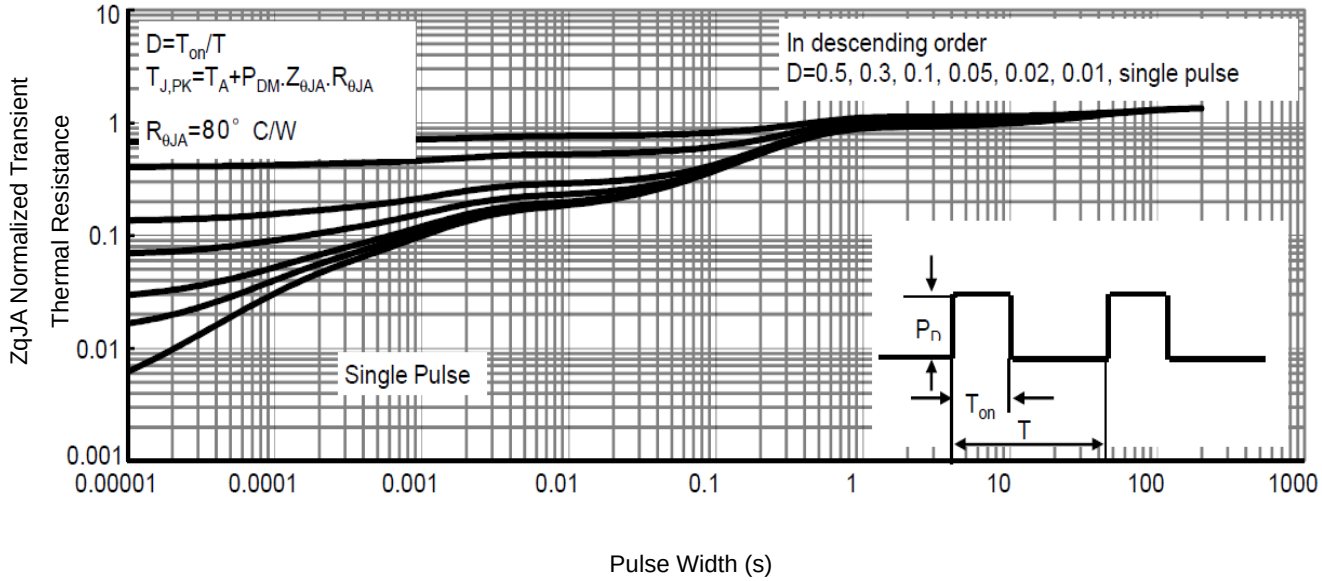


**Fig9.** Normalized Maximum Transient Thermal Impedance

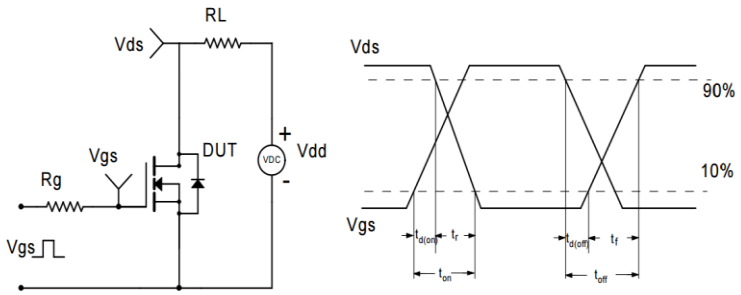


**Fig10.** Switching Time Test Circuit and waveforms

# G2306

**30V/5.0A N Channel Advanced Power MOSFET**

## SOT23 Mechanical Data

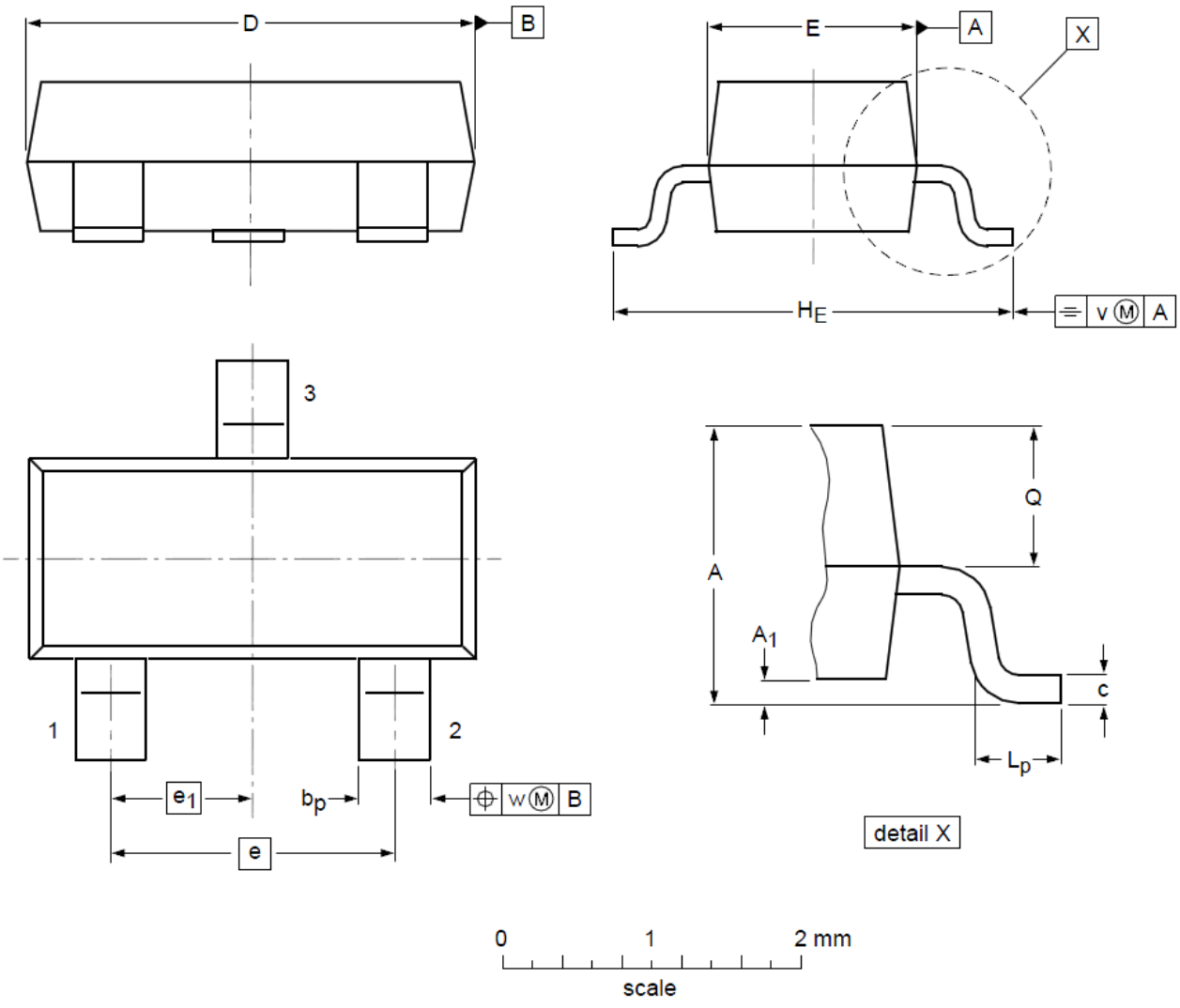


**DIMENSIONS** ( unit : mm )

| Symbol | Min | Typ | Max | Symbol | Min | Typ | Max |
|---|---|---|---|---|---|---|---|
| **A** | 0.90 | 1.01 | 1.15 | **$A_1$** | 0.01 | 0.05 | 0.10 |
| **$b_p$** | 0.30 | 0.42 | 0.50 | **c** | 0.08 | 0.13 | 0.15 |
| **D** | 2.80 | 2.92 | 3.00 | **E** | 1.20 | 1.33 | 1.40 |
| **e** | -- | 1.90 | -- | **$e_1$** | -- | 0.95 | -- |
| **$H_E$** | 2.25 | 2.40 | 2.55 | **$L_p$** | 0.30 | 0.42 | 0.50 |
| **Q** | 0.45 | 0.49 | 0.55 | **v** | -- | 0.20 | -- |
| **w** | -- | 0.10 | -- | | | | |

ENTEGRECİ

Bu belge www.entegreci.com üzerinden sunulmaktadır.

# Elektronik komponent tedarikinde Entegreci

Entegreci, Eskişehir merkezli, Türkiye geneline satış yapan bir elektronik komponent mağazasıdır. Entegreler (IC), mikrodenetleyiciler, transistörler, diyotlar, pasif elemanlar, konnektörler, modüller ve geliştirme kartları tek adetten seri üretim adetlerine kadar satılır. Ürün sayfalarında güncel stok durumunu, fiyatı ve datasheet bağlantısını bulabilirsiniz.

### Parça koduyla arama

Üretici parça numarasını yazın; stok ve fiyatı hemen görün.

**www.entegreci.com**

### Ürün kategorileri

Entegreden kapasitöre tüm elektronik komponent kategorileri.

**Kategorilere göz atın**

### Üreticiler

Aradığınız üreticinin ürünlerini tek sayfada inceleyin.

**Üreticileri görün**

### Toplu alım ve teklif

Listede olmayan ya da yüksek adetli parçalar için teklif isteyin.

**Teklif isteyin**

**www.entegreci.com** | **destek@entegreci.com** | **0850 305 90 34**

Entegreci is an online electronic components store based in Türkiye. Search by manufacturer part number to see stock, prices and datasheets for integrated circuits, microcontrollers, transistors, passive components and connectors, or request a quote for parts that are not listed.

Bu sayfa Entegreci tarafından eklenmiştir. Belgenin önceki sayfaları asıl yayıncısına aittir ve içeriği değiştirilmemiştir; en güncel sürüm için belgenin yayıncısına başvurun.