Green Mode onsemi Buck Switch

FSL336LR

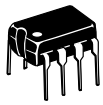

PDIP−7 (PDIP−8 LESS PIN 6)
CASE 626A

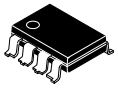

PDIP7 MINUS PIN 6 GW
CASE 707AA

MARKING DIAGRAM

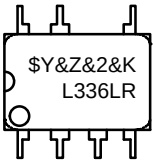

$Y = Logo
&Z = Assembly Plant Code
&2 = 2−Digit Date Code
&K = 2−Digits Lot Run Traceability Code
LR336LR = Specific Device Code

ORDERING INFORMATION

See detailed ordering and shipping information on page 11 of this data sheet.

Description

The FSL336LR integrated Pulse Width Modulator (PWM) and SENSEFET® is specifically designed for high−performance offline buck, buck−boost, and non−isolation flyback Switched Mode Power Supplies (SMPS) with minimal external components. This device integrates a high−voltage power regulator that enables operation without auxiliary bias winding. An internal transconductance amplifier reduces external components for the feedback compensation circuit.

The integrated PWM controller includes: 10 V regulator for no external bias circuit, Under−Voltage Lockout (UVLO), Leading−Edge Blanking (LEB), an optimized gate turn−on / turn−off driver, EMI attenuator, Thermal Shutdown (TSD), temperature−compensated precision current sources for loop compensation, and fault−protection circuitry. Protections include: Overload Protection (OLP), Over−Voltage Protection (OVP), and Feedback Open Loop Protection (FB_OLP). FSL336LR offers good soft−start performance during startup.

The internal high−voltage startup switch and the Burst−Mode operation with very low operating current reduce the power loss in Standby Mode. As the result, it is possible to reach power loss of 120 mW without external bias and 25 mW with external bias when input voltage is 230 V_{AC}.

Features

- Built−in Avalanche−Rugged SENSEFET: 650 V
- Fixed Operating Frequency: 50 kHz
- No−Load Power Consumption:
  <25 mW at 230 V_{AC} with External Bias;
  <120 mW at 230 V_{AC} without External Bias
- No Need for Auxiliary Bias Winding
- Frequency Modulation for Attenuating EMI
- Pulse−by−Pulse Current Limiting
- Ultra−Low Operating Current: 250 μA
- Built−in Soft−Start and Startup Circuit
- Adjustable Peak Current Limit
- Built−in Transconductance (Error) Amplifier
- Various Protections: Overload Protection (OLP), Over−Voltage Protection (OVP), Feedback Open−Loop Protection (FB_OLP), Thermal Shutdown (TSD)
- Fixed 650 ms Restart Time for Safe Auto−Restart of All Protections
- These Devices are Pb−Free, Halide Free and are RoHS Compliant

Applications

- SMPS for Home Appliances and Industrial Applications
- SMPS for Auxiliary Power

© Semiconductor Components Industries, LLC, 2013

APPLICATION DIAGRAMS

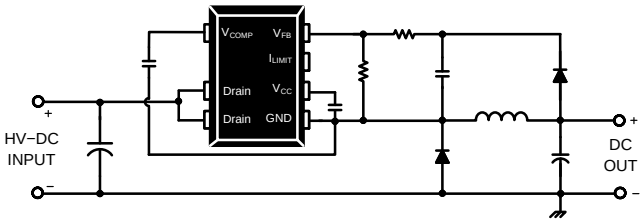

Figure 1. Buck Converter Application

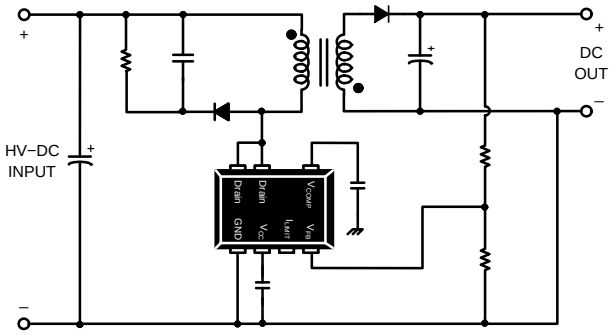

Figure 2. Non−Isolation Flyback Converter Application

BLOCK DIAGRAM

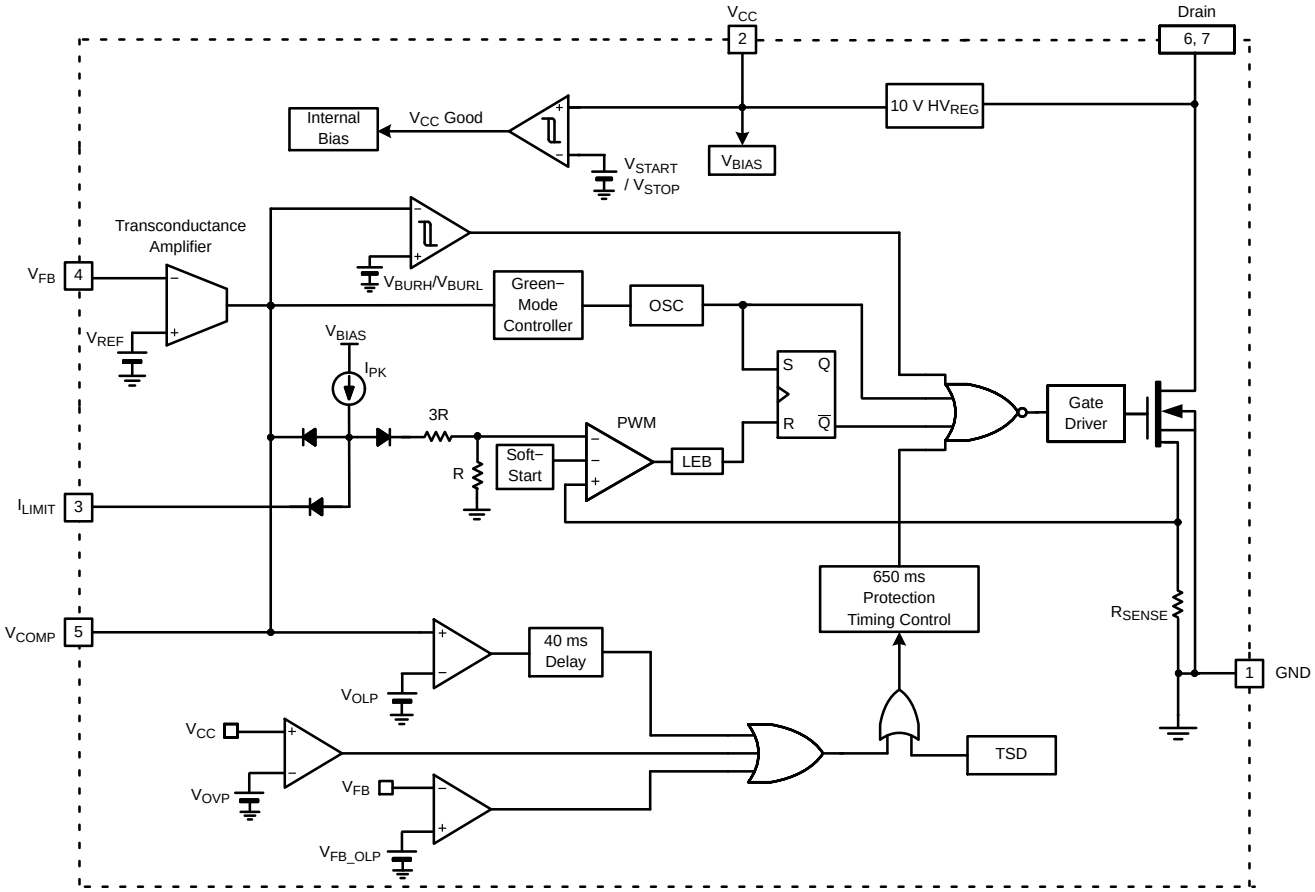

Figure 3. Internal Block Diagram

PIN CONFIGURATION

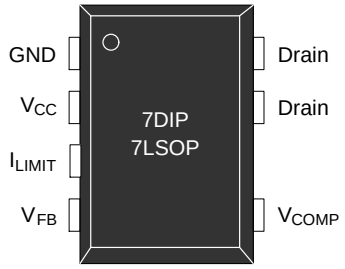

Figure 4. Pin Configuration

PIN DEFINITIONS

Pin #	Name	Description
1	GND	*Ground*. SENSEFET source terminal on the primary side and internal control ground.
2	V_{CC}	*Positive Supply Voltage Input*. This pin is the positive supply input that provides the internal operating current for startup and steady−state operation. This pin voltage is regulated to 10 V, without the external bias circuit, via an internal 10−V HVREG *(see Figure 3)*. When the external bias voltage is >10 V, it disables the internal high−voltage regulator to reduce power consumption.
3	I_{LIMIT}	*Peak Current Limit*. Adjusts the peak current limit of the SENSEFET. The internal 50 μA current source is diverted to the parallel combination of an internal 46 kΩ (3R + R) resistor and any external resistor to GND on this pin to determine the peak current limit.
4	V_{FB}	*Feedback Voltage*. Inverting input of the transconductance amplifier. This pin controls the converter output voltage by outputting a VCOMP−pin current proportional to the difference between the reference voltage and the output voltage divided by external resistor divider.
5	V_{COMP}	*Comp Voltage*. Output of the transconductance amplifier. The compensation networks are placed between the V_{COMP} and GND pins to achieve stability and good dynamic performance.
6, 7	Drain	*Drain*. High−voltage power SENSEFET drain connection. In addition, during startup and steady−state operation; the internal high−voltage current source supplies internal bias and charges the external capacitor connected to the V_{CC} pin. Once V_{CC} reaches 8 V, all internal blocks are activated. The internal high−voltage current source is enabled until V_{CC} reaches 10 V. After that, the internal high−voltage regulator turns on and off regularly to maintain V_{CC} at 10 V.

ABSOLUTE MAXIMUM RATINGS (T_A = 25°C unless otherwise specified)

Symbol	Parameter	Min	Max	Unit
V_{DS}	Drain Pin Voltage	−0.3	650.0	V
V_{CC}	Supply Voltage	−0.3	26.0	V
V_{COMP}	V_{COMP} Pin Voltage	−0.3	Internally Clamped Voltage (Note 1)	V
V_{FB}	Feedback Voltage	−0.3	12.0	V
I_{LIMIT}	Current Limit Pin Voltage	−0.3	12.0	V
I_{DM}	Drain Current Pulsed (Note 2)	−	12	A
E_{AS}	Single Pulsed Avalanche Energy (Note 3)	−	230	mJ
P_D	Total Power Dissipation	−	1.25	W
T_J	Operating Junction Temperature (Note 4)	−40	125	°C
	Maximum Junction Temperature	−	150	°C
T_{STG}	Storage Temperature	−55	150	°C

Stresses exceeding those listed in the Maximum Ratings table may damage the device. If any of these limits are exceeded, device functionality should not be assumed, damage may occur and reliability may be affected.

1. V_{COMP} is clamped by internal clamping diode (11 V, I_{CLAMP_MAX} < 100 μA).
2. Repetitive rating: pulse width is limited by maximum junction temperature.
3. L = 51 mH, starting T_J = 25°C.
4. Although this parameter guarantees IC operation, it does not guarantee all electrical characteristics.

THERMAL IMPEDANCE (T_A = 25°C unless otherwise specified)

Symbol	Characteristic	Value	Unit
θ_{JA}	Junction−to−Ambient Thermal Impedance (Note 5)	100	°C/W

5. JEDEC recommended environment, JESD51−2, and test board, JESD51−3, with minimum land pattern.

ESD CAPABILITY

Symbol	Characteristic	Value	Unit
ESD	Human Body Model, ANSI/ESDA/JEDEC JS−001−2012 (Note 6)	4	kV
	Charged Device Model, JESD22−C101 (Note 6)	2	

6. Meets JEDEC standards ANSI/ESDA/JEDEC JS−001−2012 and JESD 22−C101.

ELECTRICAL CHARACTERISTICS (T_A = 25°C unless otherwise specified)

Symbol	Parameter	Conditions	Min	Typ	Max	Unit
SENSEFET SECTION						
BV_{DSS}	Drain−Source Breakdown Voltage	V_{CC} = 0 V, I_D = 250 μA	650	−	−	V
I_{DSS}	Zero Gate Voltage Drain Current	V_{DS} = 520 V, T_A = 125°C	−	−	250	μA
$R_{DS(ON)}$	Drain−Source On−State Resistance	V_{GS} = 10 V, I_D = 1 A	−	3.5	4.0	Ω
C_{ISS}	Input Capacitances	V_{GS} = 0 V, V_{DS} = 25 V, f = 1 MHz	−	290	−	pF
C_{OSS}	Output Capacitance	V_{GS} = 0 V, V_{DS} = 25 V, f = 1 MHz	−	45	−	pF
C_{RSS}	Reverse Transfer Capacitance	V_{GS} = 0 V, V_{DS} = 25 V, f = 1 MHz	−	5.5	−	pF
t_r	Rise Time	V_{DD} = 350 V, I_D = 3.5 A	−	22	−	ns
t_f	Fall Time	V_{DD} = 350 V, I_D = 3.5 A	−	19	−	ns
CONTROL SECTION						
f_{OSC}	Switching Frequency	V_{COMP} = 2.5 V	45	50	55	kHz
f_M	Frequency Modulation (Note 7)	V_{COMP} = 2.5 V, Randomly	−	±3	−	kHz
$t_{on.max}$	Maximum Turn−On Time	V_{COMP} = 2.5 V	11.2	13.3	15.4	μs

ELECTRICAL CHARACTERISTICS (T_A = 25°C unless otherwise specified) (continued)

Symbol	Parameter	Conditions	Min	Typ	Max	Unit
CONTROL SECTION						
V_{START}	UVLO Threshold Voltage	V_{COMP} = 0 V, V_{CC} Sweep	7.2	8.0	8.8	V
V_{STOP}		After Turn On	6.3	7.0	7.7	V
I_{PK}	Current Limit Source Current	V_{COMP} = 2.5 V	35	50	65	μA
t_{SS}	Soft−Start Time	V_{COMP} = 2.5 V	7	10	13	ms
BURST MODE SECTION						
V_{BURH}	Burst−Mode HIGH Threshold Voltage	V_{CC} = 15 V, V_{COMP} Increase	0.58	0.65	0.72	V
V_{BURL}	Burst−Mode LOW Threshold Voltage	V_{CC} = 15 V, V_{COMP} Decrease	0.52	0.59	0.66	V
HYS_{BUR}	Burst−Mode Hysteresis		−	60	−	mV
PROTECTION SECTION						
I_{LIM}	Peak Current Limit	V_{COMP} = 2.5 V, di/dt = 1.2 A/μs	1.6	1.8	2.0	A
t_{CLD}	Current Limit Delay (Note 7)		−	200	−	ns
V_{OLP}	Overload Protection	V_{COMP} Increase	2.7	3.0	3.3	V
t_{LEB}	Leading−Edge Blanking Time (Note 7)		−	200	−	ns
V_{FB_OLP}	FB Open−Loop Protection	V_{FB} Decrease	0.4	0.5	0.6	V
V_{OVP}	Over−Voltage Protection	V_{CC} Increase	23.0	24.5	26.0	V
TSD	Thermal Shutdown Temperature (Note 7)		125	135	150	°C
HYS_{TSD}	TSD Hysteresis Temperature (Note 7)		−	60	−	°C
t_{DELAY}	Overload Protection Delay (Note 7)	V_{COMP} > 3 V	−	40	−	ms
$t_{RESTART}$	Restart Time After Protection (Note 7)		−	650	−	ms
TRANSCONDUCTANCE AMPLIFIER SECTION						
G_m	Transconductance of Error Amplifier		380	480	580	μmho
V_{REF}	Voltage Feedback Reference		2.45	2.50	2.55	V
$I_{EA.SR}$	Output Sourcing Current	V_{FB} = V_{REF} − 0.025 V	−	−12	−	μA
$I_{EA.SK}$	Output Sink Current	V_{FB} = V_{REF} + 0.025 V	−	12	−	μA
HIGH−VOLTAGE REGULATOR SECTION						
V_{HVREG}	HV Regulator Voltage	V_{COMP} = 0 V, V_{DRAIN} = 40 V	9	10	11	V
TOTAL DEVICE SECTION						
I_{OP1}	Operating Supply Current (Control Part Only, without Switching)	0 V < V_{COMP} < V_{BURL}	−	0.25	0.35	mA
I_{OP2}	Operating Supply Current (While Switching)	V_{BURL} < V_{COMP} < V_{OLP}	−	0.8	1.3	mA
I_{CH}	Startup Charging Current	V_{CC} = 0 V, V_{DRAIN} > 40 V	−	6	−	mA
I_{START}	Startup Current	V_{CC} = Before V_{START}, V_{COMP} = 0 V	−	120	155	μA
V_{DRAIN}	Minimum Drain Supply Voltage	V_{CC} = V_{COMP} = 0 V, V_{DRAIN} Increase	−	35	−	V

Product parametric performance is indicated in the Electrical Characteristics for the listed test conditions, unless otherwise noted. Product performance may not be indicated by the Electrical Characteristics if operated under different conditions.

7. Though guaranteed by design; not 100% tested in production.

TYPICAL PERFORMANCE CHARACTERISTICS

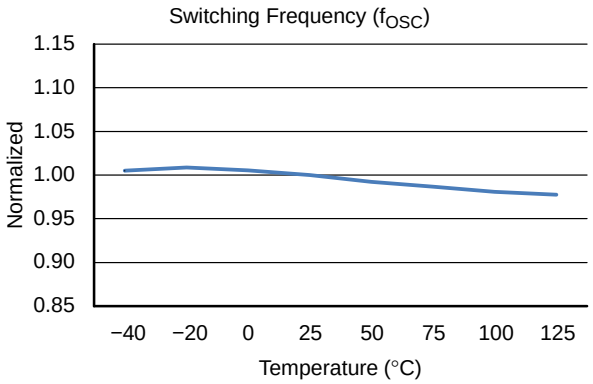

Figure 5. Operating Frequency vs. Temperature

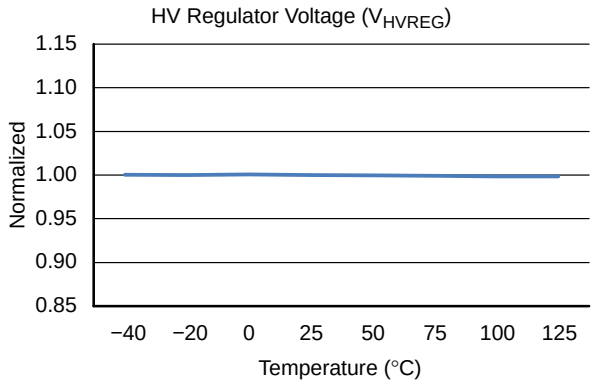

Figure 6. HV Regulator Voltage vs. Temperature

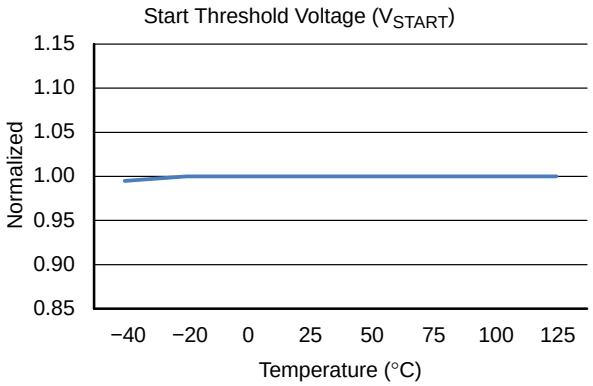

Figure 7. Start Threshold Voltage vs. Temperature

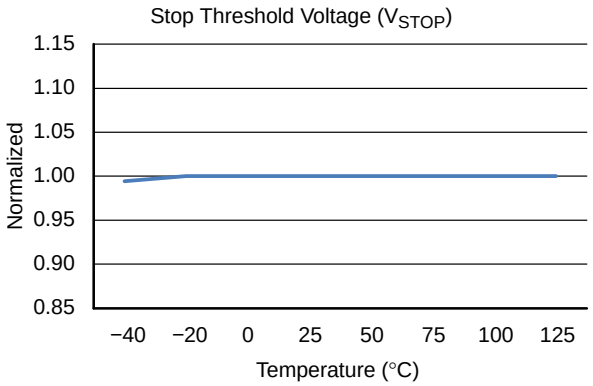

Figure 8. Stop Threshold Voltage vs. Temperature

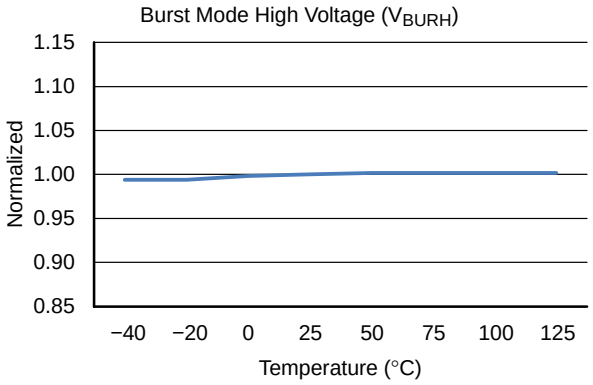

Figure 9. Burst Mode High Voltage vs. Temperature

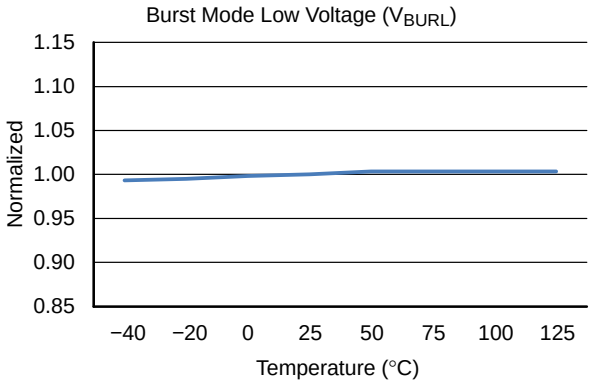

Figure 10. Burst Mode Low Voltage vs. Temperature

TYPICAL PERFORMANCE CHARACTERISTICS (continued)

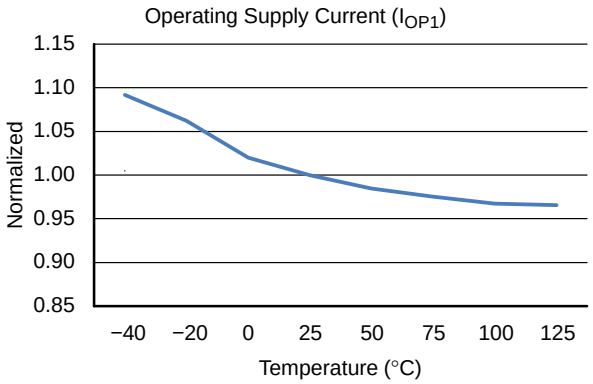

Figure 11. Operating Supply Current 1 vs. Temperature

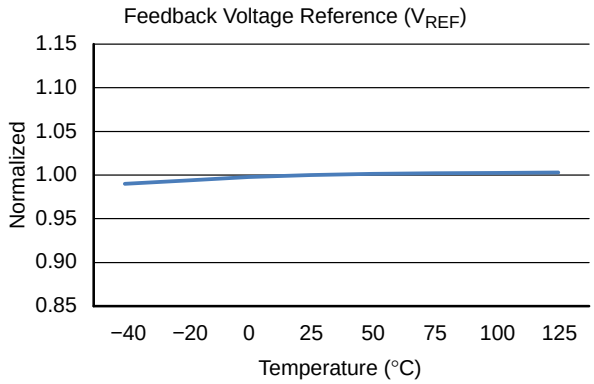

Figure 12. Feedback Voltage Reference vs. Temperature

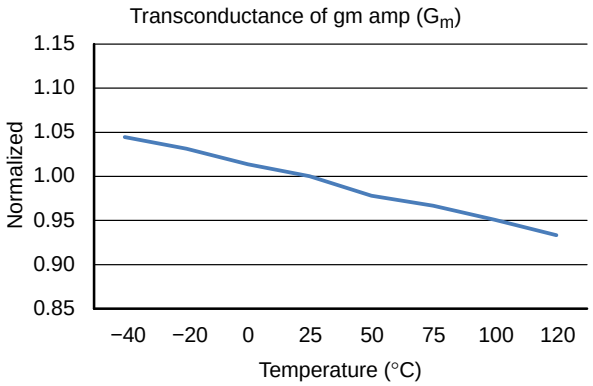

Figure 13. Transconductance of gm Amplifier vs. Temperature

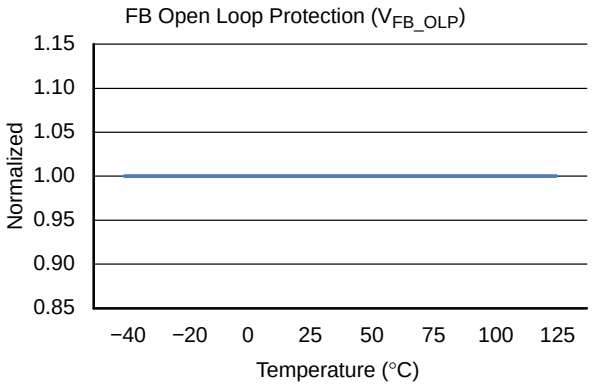

Figure 14. FB Open−Loop Protection Voltage vs. Temperature

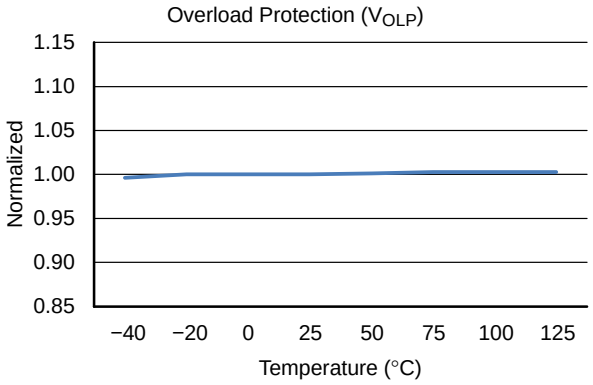

Figure 15. Overload Protection vs. Temperature

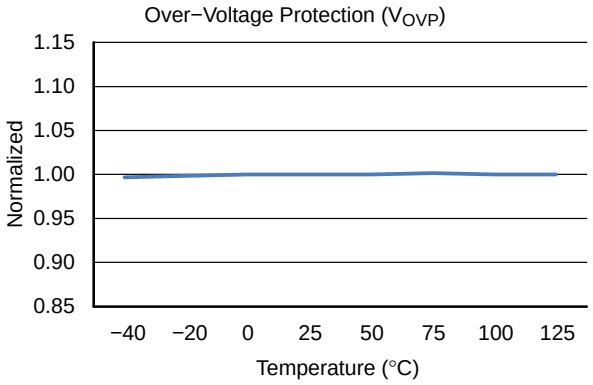

Figure 16. Over−Voltage Protection vs. Temperature

FUNCTIONAL DESCRIPTION

Startup and High−Voltage Regulator

During startup, an internal high−voltage current source (I_{CH}) of the high−voltage regulator supplies the internal bias current (I_{START}) and charges the external capacitor (C_A) connected to the V_{CC} pin, as illustrated in Figure 17. This internal high−voltage current source is enabled until V_{CC} reaches 10 V. During steady−state operation, this internal high−voltage regulator (HV_{REG}) maintains the V_{CC} with 10 V and provides operating current (I_{OP}) for all internal circuits. Therefore, no external bias circuit is necessary. The high−voltage regulator is disabled when the external bias is higher than 10 V.

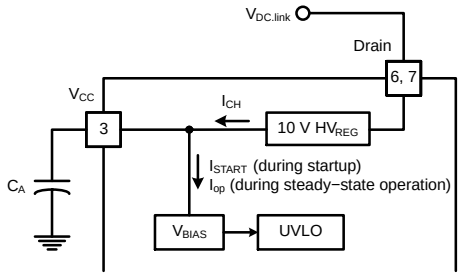

Figure 17. Startup and HV_{REG} Block

Oscillator Block

The oscillator frequency is set internally with a random frequency fluctuation function. Fluctuation of the switching frequency can reduce Electro−Magnetic Induction (EMI) by spreading the energy over a wider frequency range than the bandwidth measured by the EMI test equipment. The amount of EMI reduction is directly related to the range of the frequency variation. The range of frequency variation is fixed internally; however, its selection is randomly chosen by the combination of an external feedback voltage and an internal free−running oscillator. This randomly chosen switching frequency effectively spreads the EMI noise near switching frequency and allows the use of a cost−effective inductor instead of an AC input line filter to satisfy world−wide EMI requirements.

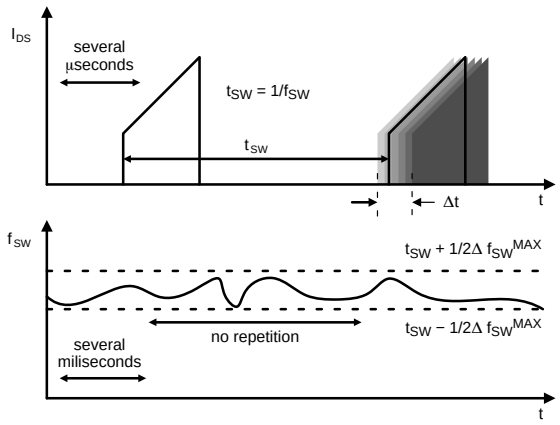

Figure 18. Frequency Fluctuation Waveform

Feedback Control

The FSL336LR employs current−mode control with a transconductance amplifier for feedback control, as shown in Figure 19. Two resistors are typically used on the V_{FB} pin to sense output voltage. An external compensation circuit is recommended on the V_{COMP} pin to control output voltage. A built−in transconductance amplifier accurately controls output voltage without external components, such as Zener diode and transistor.

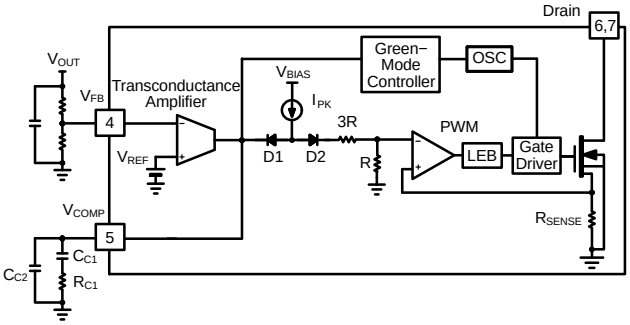

Figure 19. Pulse Width Modulation (PWM) Circuit

Transconductance Amplifier (gm Amplifier)

The output of the transconductance amplifier sources and sinks the current, respectively, to and from the compensation circuit connected on the V_{COMP} pin *(see Figure 20)*. This compensated V_{COMP} pin voltage controls the switching duty cycle by comparing with the voltage across the R_{SENSE}. When the feedback pin voltage exceeds the internal reference voltage (V_{REF}) of 2.5 V; the transconductance amplifier sinks the current from the compensation circuit, V_{COMP} is pulled down, and the duty cycle is reduced. This typically occurs when input voltage is increased or output load is decreased. A two−pole and one−zero compensation network is recommended for optimal output voltage control and AC dynamics. Typically 220 nF, 75 kΩ, and 220 pF are used for C_{C1}, R_{C1}, and C_{C2}; respectively.

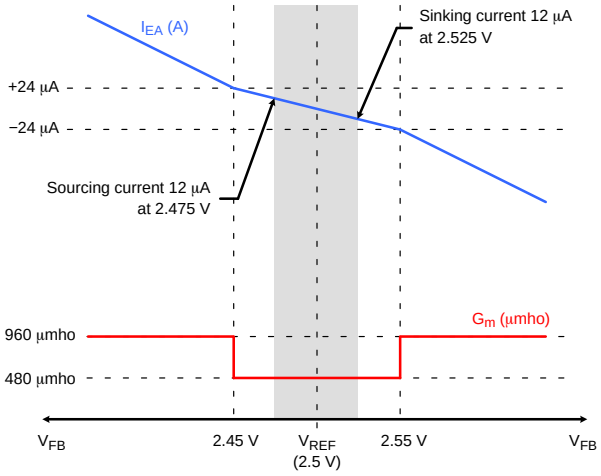

Figure 20. Characteristics of gm Amplifier

Pulse−by−Pulse Current Limit

Because current−mode control is employed, the peak current flowing through the SENSEFET is limited by the inverting input of PWM comparator, as shown in Figure 19. Assuming that 50 μA current source flows only through the internal resistors (3R + R = 46 kΩ), the cathode voltage of diode D2 is about 2.4 V. Since D1 is blocked when V_{COMP} exceeds 2.4 V, the maximum voltage of the cathode of D2 is clamped at this voltage. Therefore, the peak value of the current of the SENSEFET is limited.

Leading Edge Blanking (LEB)

At the instant the internal SENSEFET is turned on, a high−current spike through the SENSEFET is typically caused by: primary−side capacitance and secondary−side rectifier diode reverse recovery of flyback application, the freewheeling diode reverse recovery, and other parasitic capacitance of buck application. Excessive voltage across the sensing resistor (R_{SENSE}) leads to incorrect feedback operation in the current−mode control. To counter this effect, the FSL336LR has a Leading−Edge Blanking (LEB) circuit *(see Figure 19)*. This circuit inhibits the PWM comparator for a short time (t_{LEB}) after the SENSEFET is turned on.

Protection Circuits

The protective functions include Overload Protection (OLP), Over−Voltage Protection (OVP), Under−Voltage Lockout (UVLO), Feedback Open−Loop Protection (FB_OLP), and Thermal Shutdown (TSD). All of the protections operate in Auto−Restart Mode. Since these protection circuits are fully integrated within the IC without external components, reliability is improved without increasing cost or PCB space. If a fault condition occurs, switching is terminated and the SENSEFET remains off. At the same time, internal protection timing control is activated to decrease power consumption and stress on passive and active components during Auto−Restart Mode. When internal protection timing control is activated, V_{CC} is regulated with 10 V through the internal high−voltage regulator until switching is terminated. This internal protection timing control continues until the restart time (650 ms) expires. After 650 ms, the internal high−voltage regulator is disabled and V_{CC} is decreased. When V_{CC} reaches the UVLO stop voltage V_{STOP} (7 V), the protection is reset and the internal high−voltage current source charges the V_{CC} capacitor via the drain pin again. When V_{CC} reaches the UVLO start voltage, V_{START} (8 V), normal operation resumes. In this manner, Auto−Restart Mode can alternately enable and disable the switching of the power SENSEFET until the fault condition is eliminated.

Overload Protection (OLP)

Overload is defined as the load current exceeding a preset level due to an unexpected event. In this situation, the protection circuit should be activated to protect the SMPS. However, when the SMPS operates normally, the OLP circuit can be enabled during load transition or startup. To avoid this undesired operation, an internal fixed delay (40 ms) circuit determines whether it is a transient situation or a true overload situation *(see Figure 21)*. The current−mode feedback path limits the maximum power current and, when the output consumes more than this maximum power, the output voltage (V_O) decreases below its rated voltage. This reduces feedback pin voltage, which increases the output current of the internal transconductance amplifier. Eventually V_{COMP} is increased. When V_{COMP} reaches 3 V, the internal fixed OLP delay (40 ms) is activated. After this delay, the switching operation is terminated, as shown in Figure 22.

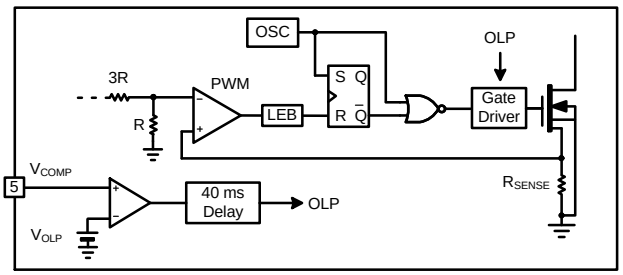

Figure 21. Overload Protection Internal Circuit

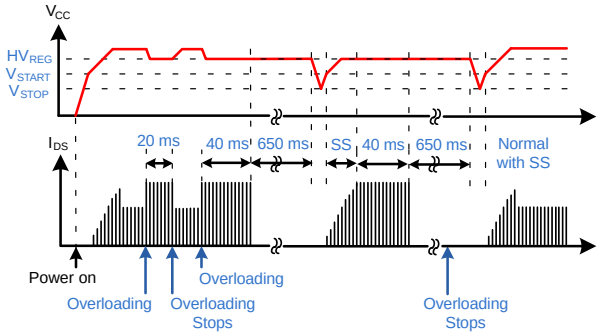

Figure 22. Overload Protection (OLP) Waveform

Thermal Shutdown (TSD)

The SENSEFET and control IC integrated on the same package makes it easier to detect the temperature of the SENSEFET. When the junction temperature exceeds 135°C, thermal shutdown is activated. The FSL336LR is restarted after the temperature decreases to 60°C.

Over−Voltage Protection (OVP)

If any feedback loop components fail due to a soldering defect, V_{COMP} climbs up in manner similar to the overload situation, forcing the preset maximum current to be supplied to the SMPS until the OLP is triggered. In this case, excessive energy is provided to the output and the output voltage may exceed the rated voltage before the OLP is activated. To prevent this situation, an Over−Voltage Protection (OVP) circuit is employed. In general, output voltage can be monitored through V_{CC} and, when V_{CC} exceeds 24.5 V, OVP is triggered, resulting in termination of switching operation. To avoid undesired activation of OVP during normal operation, V_{CC} should be designed below 24.5 V *(see Figure 23)*.

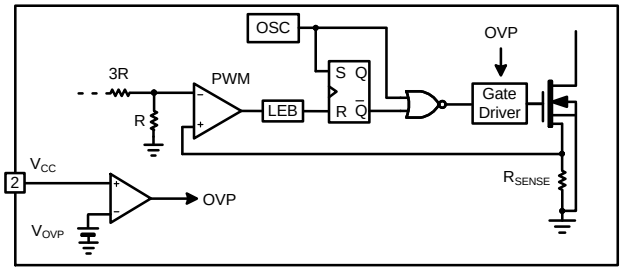

Figure 23. Over−Voltage Protection Circuit

Feedback Open Loop Protection (FB_OLP)

In the event of a feedback loop failure, especially a shorted lower−side resistor of the feedback pin; not only does V_{COMP} rise in a similar manner to the overload situation, but V_{FB} starts to drop to IC ground level. Although OLP and OVP also can protect the SMPS in this situation, FB_OLP can reduce stress on SENSEFET. If there is no FB_OLP, output voltage is much higher than the rated voltage before OLP or OVP triggers. When V_{FB} drops below 0.5 V, FB_OLP is activated, switching off. To avoid undesired activation during startup, this function is disabled during soft−start time.

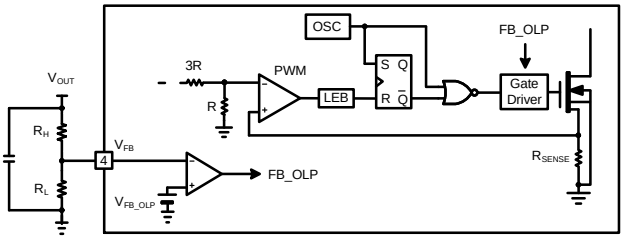

Figure 24. Feedback Open−Loop Protection Circuit

Soft−Start

The internal soft−start circuit slowly increases the SENSEFET current after it starts. The typical soft−start time is 10 ms, as shown in Figure 25, where progressive increments of the SENSEFET current are allowed during startup. The pulse width to the power switching device is progressively increased to establish the correct working conditions for transformers, inductors, and capacitors. The voltage on the output capacitors is gradually increased to smoothly establish the required output voltage. Soft−start also helps to prevent transformer saturation and reduces stress on the secondary diode.

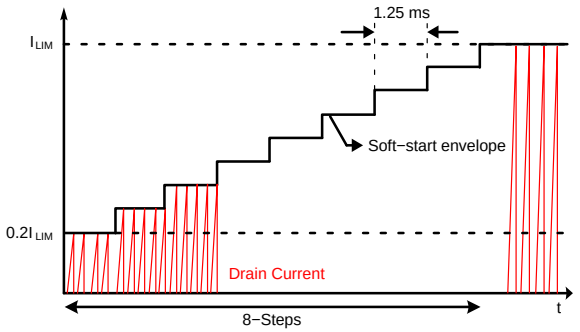

Figure 25. Internal Soft−Start

Burst Mode Operation

To minimize power dissipation in Standby Mode, the FSL336LR enters Burst Mode. As the load decreases, the COMP pin voltage (V_{COMP}) decreases. As shown in Figure 26, the device automatically enters Burst Mode when the feedback voltage drops below V_{BURL}. At this point, switching stops and the output voltages start to drop at a rate dependent on the standby current load. This causes V_{COMP} to rise. Once it passes V_{BURH}, switching resumes. V_{COMP} then falls and the process repeats. Burst Mode alternately enables and disables switching of the SENSEFET and reduces switching loss in Standby Mode.

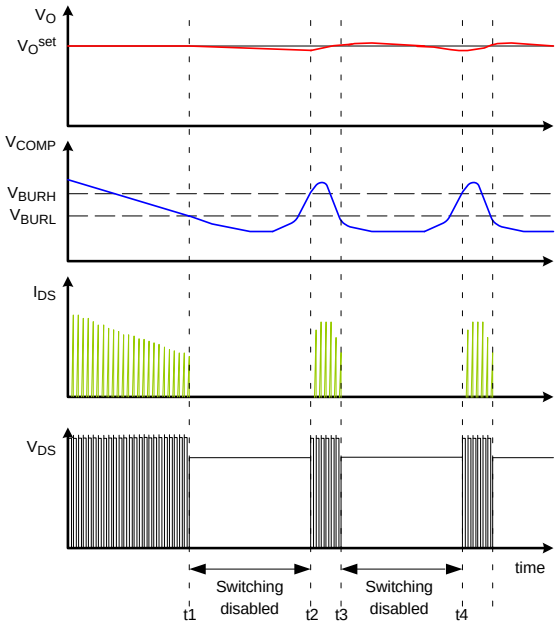

Figure 26. Burst Mode Operation

Green Mode Operation

As output load condition is reduced, the switching loss becomes the largest power loss factor. FSL306LR uses the V_{COMP} pin voltage to monitor output load condition. As output load decreases, V_{COMP} decreases and switching frequency declines, as shown in Figure 27. Once V_{COMP} falls to 0.8 V, the switching frequency varies between 21 kHz and 23 kHz before Burst Mode operation. At Burst Mode operation, random frequency fluctuation still functions.

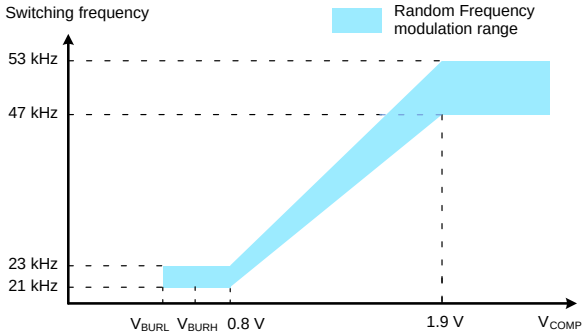

Figure 27. Green Mode Operation

Adjusting Current Limit

As shown in Figure 28, a combined 46 kΩ internal resistance (3R + R) is connected to the inverting lead on the PWM comparator. An external resistance of Rx on the I_{LIMIT} pin forms a parallel resistance with the 46 kΩ when the internal diodes are biased by the main current source of 50 μA. For example, FSL336LR has a typical SENSEFET peak current limit of 1.8 A. Current limit can be adjusted to 1.2 A by inserting R_X between the I_{LIMIT} in and the ground. The value of the R_X can be estimated by the following equation:

$$1.8\ A : 1.2\ A = (46\ k\Omega + R_x) : R_x \quad \text{(eq. 1)}$$

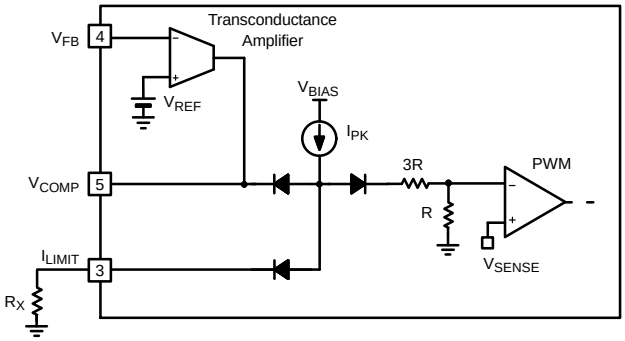

Figure 28. Current Limit Adjustment

ORDERING INFORMATION

Part Number	Operating Junction Temperature	PKG	Packing Method†	Typical Output Power (Note 8)			
				Current Limit	$R_{DS(ON),MAX}$	85 V_{AC}~265 V_{AC} & Open Frame (Note 9)	
						Buck Application (Note 10)	Flyback Application
FSL336LRN	−40°C~125°C	7−DIP	Rail	1.8 A	4 Ω	9 W	20 W
FSL336LRLX		7−LSOP	Tape & Reel				

†For information on tape and reel specifications, including part orientation and tape sizes, please refer to our Tape and Reel Packaging Specifications Brochure, BRD8011/D.

8. The junction temperature can limit the maximum output power.
9. Maximum practical continuous power in an open−frame design at 50°C ambient.
10. Based on 15 V output voltage condition. Output voltage can limit the maximum output power.

SENSEFET is registered trademark of Semiconductor Components Industries, LLC dba “**onsemi**” or its affiliates and/or subsidiaries in the United States and/or other countries.

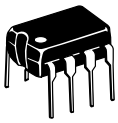

PDIP−7 (PDIP−8 LESS PIN 6)
CASE 626A
ISSUE C

DATE 22 APR 2015

SCALE 1:1

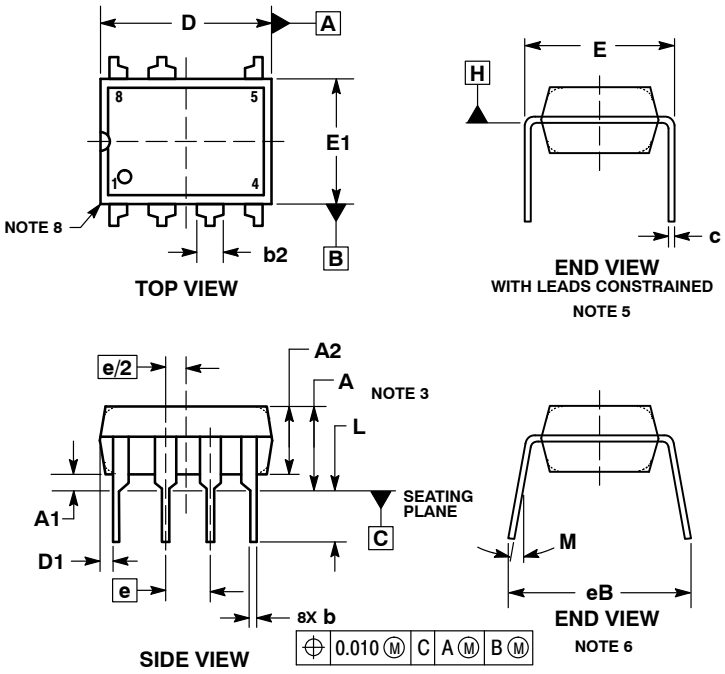

NOTES:
1. DIMENSIONING AND TOLERANCING PER ASME Y14.5M, 1994.
2. CONTROLLING DIMENSION: INCHES.
3. DIMENSIONS A, A1 AND L ARE MEASURED WITH THE PACKAGE SEATED IN JEDEC SEATING PLANE GAUGE GS−3.
4. DIMENSIONS D, D1 AND E1 DO NOT INCLUDE MOLD FLASH OR PROTRUSIONS. MOLD FLASH OR PROTRUSIONS ARE NOT TO EXCEED 0.10 INCH.
5. DIMENSION E IS MEASURED AT A POINT 0.015 BELOW DATUM PLANE H WITH THE LEADS CONSTRAINED PERPENDICULAR TO DATUM C.
6. DIMENSION eB IS MEASURED AT THE LEAD TIPS WITH THE LEADS UNCONSTRAINED.
7. DATUM PLANE H IS COINCIDENT WITH THE BOTTOM OF THE LEADS, WHERE THE LEADS EXIT THE BODY.
8. PACKAGE CONTOUR IS OPTIONAL (ROUNDED OR SQUARE CORNERS).

	INCHES		MILLIMETERS	
DIM	MIN	MAX	MIN	MAX
A	----	0.210	---	5.33
A1	0.015	----	0.38	---
A2	0.115	0.195	2.92	4.95
b	0.014	0.022	0.35	0.56
b2	0.060 TYP		1.52 TYP	
C	0.008	0.014	0.20	0.36
D	0.355	0.400	9.02	10.16
D1	0.005	----	0.13	---
E	0.300	0.325	7.62	8.26
E1	0.240	0.280	6.10	7.11
e	0.100 BSC		2.54 BSC	
eB	----	0.430	---	10.92
L	0.115	0.150	2.92	3.81
M	----	10°	---	10°

GENERIC MARKING DIAGRAM*

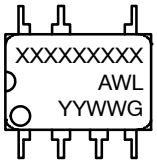

XXXX	= Specific Device Code
A	= Assembly Location
WL	= Wafer Lot
YY	= Year
WW	= Work Week
G	= Pb−Free Package

*This information is generic. Please refer to device data sheet for actual part marking. Pb−Free indicator, “G” or microdot “▪”, may or may not be present. Some products may not follow the Generic Marking.

DOCUMENT NUMBER:	**98AON11774D**	Electronic versions are uncontrolled except when accessed directly from the Document Repository. Printed versions are uncontrolled except when stamped “CONTROLLED COPY” in red.	
DESCRIPTION:	**PDIP−7 (PDIP−8 LESS PIN 6)**		**PAGE 1 OF 1**

onsemi and onsemi are trademarks of Semiconductor Components Industries, LLC dba **onsemi** or its subsidiaries in the United States and/or other countries. **onsemi** reserves the right to make changes without further notice to any products herein. **onsemi** makes no warranty, representation or guarantee regarding the suitability of its products for any particular purpose, nor does **onsemi** assume any liability arising out of the application or use of any product or circuit, and specifically disclaims any and all liability, including without limitation special, consequential or incidental damages. **onsemi** does not convey any license under its patent rights nor the rights of others.

© Semiconductor Components Industries, LLC, 2019

PDIP7 MINUS PIN 6 GW
CASE 707AA
ISSUE O

DATE 31 JAN 2017

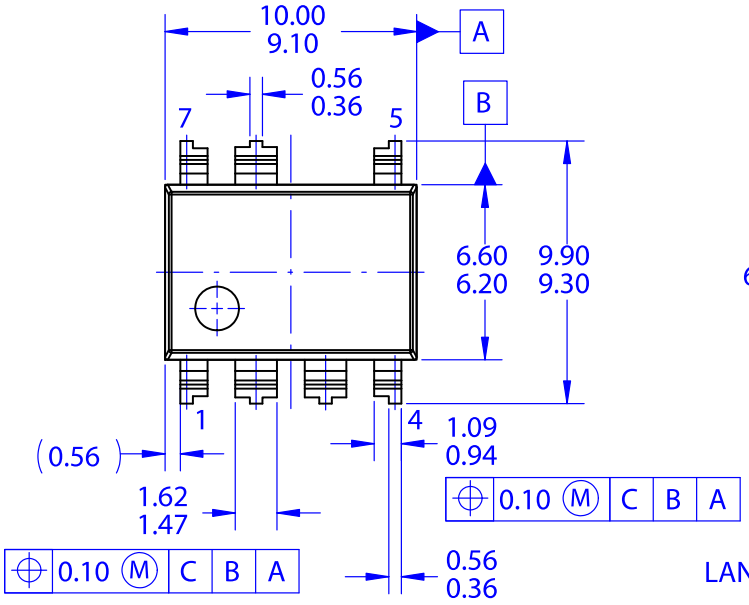

TOP VIEW

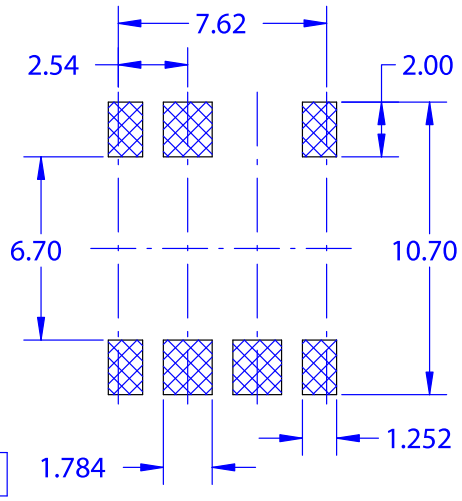

LAND PATTERN RECOMMENDATION

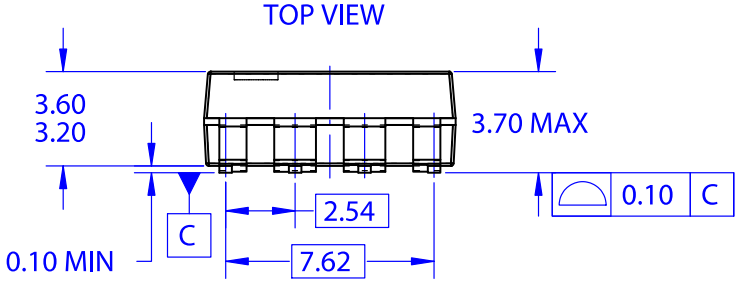

FRONT VIEW

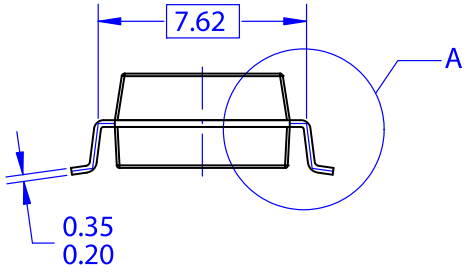

SIDE VIEW

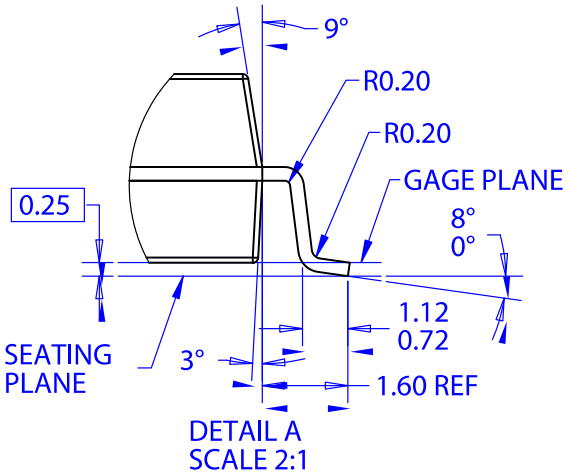

DETAIL A
SCALE 2:1

NOTES: UNLESS OTHERWISE SPECIFIED
A. NO INDUSTRY STANDARD APPLIES TO THIS PACKAGE
B. ALL DIMENSIONS ARE IN MILLIMETERS
C. DIMENSIONS ARE EXCLUSIVE OF BURRS, MOLD FLASH, AND TIE BAR EXTRUSIONS
D. DIMENSIONS AND TOLERANCES PER ASME Y14.5M-2009

DOCUMENT NUMBER:	**98AON13755G**	Electronic versions are uncontrolled except when accessed directly from the Document Repository. Printed versions are uncontrolled except when stamped "CONTROLLED COPY" in red.
DESCRIPTION:	**PDIP7 MINUS PIN 6 GW**	**PAGE 1 OF 1**

onsemi and onsemi are trademarks of Semiconductor Components Industries, LLC dba **onsemi** or its subsidiaries in the United States and/or other countries. **onsemi** reserves the right to make changes without further notice to any products herein. **onsemi** makes no warranty, representation or guarantee regarding the suitability of its products for any particular purpose, nor does **onsemi** assume any liability arising out of the application or use of any product or circuit, and specifically disclaims any and all liability, including without limitation special, consequential or incidental damages. **onsemi** does not convey any license under its patent rights nor the rights of others.

onsemi, , and other names, marks, and brands are registered and/or common law trademarks of Semiconductor Components Industries, LLC dba "**onsemi**" or its affiliates and/or subsidiaries in the United States and/or other countries. **onsemi** owns the rights to a number of patents, trademarks, copyrights, trade secrets, and other intellectual property. A listing of **onsemi**'s product/patent coverage may be accessed at www.onsemi.com/site/pdf/Patent−Marking.pdf. **onsemi** reserves the right to make changes at any time to any products or information herein, without notice. The information herein is provided "as−is" and **onsemi** makes no warranty, representation or guarantee regarding the accuracy of the information, product features, availability, functionality, or suitability of its products for any particular purpose, nor does **onsemi** assume any liability arising out of the application or use of any product or circuit, and specifically disclaims any and all liability, including without limitation special, consequential or incidental damages. Buyer is responsible for its products and applications using **onsemi** products, including compliance with all laws, regulations and safety requirements or standards, regardless of any support or applications information provided by **onsemi**. "Typical" parameters which may be provided in **onsemi** data sheets and/or specifications can and do vary in different applications and actual performance may vary over time. All operating parameters, including "Typicals" must be validated for each customer application by customer's technical experts. **onsemi** does not convey any license under any of its intellectual property rights nor the rights of others. **onsemi** products are not designed, intended, or authorized for use as a critical component in life support systems or any FDA Class 3 medical devices or medical devices with a same or similar classification in a foreign jurisdiction or any devices intended for implantation in the human body. Should Buyer purchase or use **onsemi** products for any such unintended or unauthorized application, Buyer shall indemnify and hold **onsemi** and its officers, employees, subsidiaries, affiliates, and distributors harmless against all claims, costs, damages, and expenses, and reasonable attorney fees arising out of, directly or indirectly, any claim of personal injury or death associated with such unintended or unauthorized use, even if such claim alleges that **onsemi** was negligent regarding the design or manufacture of the part. **onsemi** is an Equal Opportunity/Affirmative Action Employer. This literature is subject to all applicable copyright laws and is not for resale in any manner.

ADDITIONAL INFORMATION

TECHNICAL PUBLICATIONS:
Technical Library: www.onsemi.com/design/resources/technical−documentation
onsemi Website: www.onsemi.com

ONLINE SUPPORT: www.onsemi.com/support
For additional information, please contact your local Sales Representative at www.onsemi.com/support/sales

ENTEGRECİ

Bu belge www.entegreci.com üzerinden sunulmaktadır.

Elektronik komponent tedarikinde Entegreci

Entegreci, Eskişehir merkezli, Türkiye geneline satış yapan bir elektronik komponent mağazasıdır. Entegreler (IC), mikrodenetleyiciler, transistörler, diyotlar, pasif elemanlar, konnektörler, modüller ve geliştirme kartları tek adetten seri üretim adetlerine kadar satılır. Ürün sayfalarında güncel stok durumunu, fiyatı ve datasheet bağlantısını bulabilirsiniz.

Parça koduyla arama

Üretici parça numarasını yazın; stok ve fiyatı hemen görün.

www.entegreci.com

Ürün kategorileri

Entegreden kapasitöre tüm elektronik komponent kategorileri.

Kategorilere göz atın

Üreticiler

Aradığınız üreticinin ürünlerini tek sayfada inceleyin.

Üreticileri görün

Toplu alım ve teklif

Listede olmayan ya da yüksek adetli parçalar için teklif isteyin.

Teklif isteyin

www.entegreci.com | **destek@entegreci.com** | **0850 305 90 34**

Entegreci is an online electronic components store based in Türkiye. Search by manufacturer part number to see stock, prices and datasheets for integrated circuits, microcontrollers, transistors, passive components and connectors, or request a quote for parts that are not listed.

Bu sayfa Entegreci tarafından eklenmiştir. Belgenin önceki sayfaları asıl yayıncısına aittir ve içeriği değiştirilmemiştir; en güncel sürüm için belgenin yayıncısına başvurun.