MOSFET – N-Channel, UniFET™

200 V, 39 A, 66 mΩ

FDP39N20, FDPF39N20

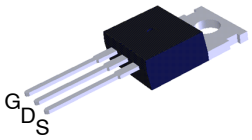

TO−220−3LD
CASE 340AT

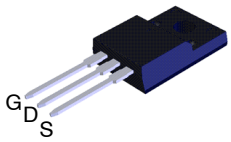

TO−220 Fullpack,
3−Lead /
TO−220F−3SG
CASE 221AT

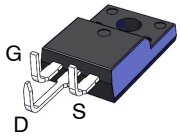

TO−220 FULLPAK 3LD L−FORMED
CASE 340BM

Description

UniFET™ MOSFET is **onsemi**'s high voltage MOSFET family based on planar stripe and DMOS technology. This MOSFET is tailored to reduce on−state resistance, and to provide better switching performance and higher avalanche energy strength. This device family is suitable for switching power converter applications such as power factor correction (PFC), flat panel display (FPD) TV power, ATX and electronic lamp ballasts.

Features

- $R_{DS(on)}$ = 66 mΩ (Max.) @ V_{GS} = 10 V, I_D = 19.5 A
- Low Gate Charge (Typ. 38 nC)
- Low C_{rss} (Typ. 57 pF)
- 100% Avalanche Tested

Applications

- PDP TV
- Lighting
- Uninterruptible Power Supply
- AC−DC Power Supply

N−CHANNEL MOSFET

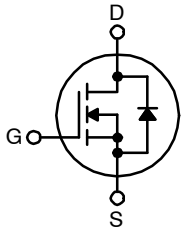

MARKING DIAGRAMS

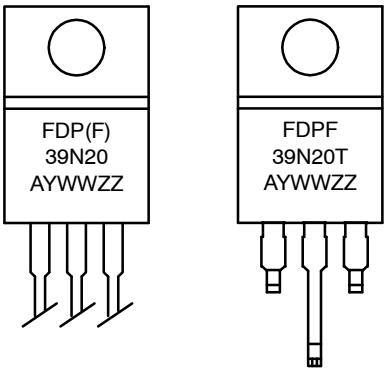

FDP(F)39N20(T)	= Specific Device Code
A	= Assembly Location
YWW	= Date Code (Year and Week)
ZZ	= Assembly Lot

ORDERING INFORMATION

See detailed ordering, marking and shipping information on page 9 of this data sheet.

© Semiconductor Components Industries, LLC, 2005

ABSOLUTE MAXIMUM RATINGS (T_C = 25°C unless otherwise noted)

Symbol	Parameter		FDP39N20	FDPF39N20 / FDPF39N20TLDTU	Unit
V_{DSS}	Drain−Source Voltage		200	200	V
I_D	Drain Current	− Continuous (T_C = 25°C) − Continuous (T_C = 100°C)	39 23.4	39* 23.4*	A A
I_{DM}	Drain Current	− Pulsed (Note 1)	156	156*	A
V_{GSS}	Gate−Source Voltage		±30	±30	V
E_{AS}	Single Pulsed Avalanche Energy (Note 2)		860	860	mJ
I_{AR}	Avalanche Current (Note 1)		39	39	A
E_{AR}	Repetitive Avalanche Energy (Note 1)		25.1	25.1	mJ
dv/dt	Peak Diode Recovery dv/dt (Note 3)		4.5	4.5	V/ns
P_D	Power Dissipation	(T_C = 25°C) − Derate Above 25°C	251 2.0	37 0.29	W W/°C
T_J, T_{STG}	Operating and Storage Temperature Range		−55 to +150	−55 to +150	°C
T_L	Maximum Lead Temperature for Soldering, 1/8” from Case for 5 Seconds		300	300	°C

Stresses exceeding those listed in the Maximum Ratings table may damage the device. If any of these limits are exceeded, device functionality should not be assumed, damage may occur and reliability may be affected.

THERMAL CHARACTERISTICS

Symbol	Parameter	FDP39N20	FDPF39N20 / FDPF39N20TLDTU	Unit
$R_{\theta JC}$	Thermal Resistance, Junction−to−Case, Max.	0.5	3.4	°C/W
$R_{\theta JA}$	Thermal Resistance, Junction−to−Ambient, Max.	62.5	62.5	°C/W

ELECTRICAL CHARACTERISTICS (T_C = 25°C unless otherwise noted)

Symbol	Parameter	Conditions	Min	Typ	Max	Unit
OFF CHARACTERISTICS						
BV_{DSS}	Drain−Source Breakdown Voltage	V_{GS} = 0 V, I_D = 250 μA	200	−	−	V
ΔBV_{DSS} / ΔT_J	Breakdown Voltage Temperature Coefficient	I_D = 250 μA, Referenced to 25°C	−	0.2	−	V/°C
I_{DSS}	Zero Gate Voltage Drain Current	V_{DS} = 200 V, V_{GS} = 0 V V_{DS} = 160 V, T_C = 125°C	− −	− −	1 10	μA μA
I_{GSSF}	Gate−Body Leakage Current, Forward	V_{GS} = 30 V, V_{DS} = 0 V	−	−	100	nA
I_{GSSR}	Gate−Body Leakage Current, Reverse	V_{GS} = −30 V, V_{DS} = 0V	−	−	−100	nA
ON CHARACTERISTICS						
$V_{GS(th)}$	Gate Threshold Voltage	V_{DS} = V_{GS}, I_D = 250 μA	3.0	−	5.0	V
$R_{DS(on)}$	Static Drain−Source On−Resistance	V_{GS} = 10 V, I_D = 19.5 A	−	0.056	0.066	Ω
g_{FS}	Forward Transconductance	V_{DS} = 40 V, I_D = 19.5 A	−	28.5	−	S
DYNAMIC CHARACTERISTICS						
C_{iss}	Input Capacitance	V_{DS} = 25 V, V_{GS} = 0 V, f = 1.0 MHz	−	1640	2130	pF
C_{oss}	Output Capacitance		−	400	520	pF
C_{rss}	Reverse Transfer Capacitance		−	57	85	pF

Share Feedback
Your Opinion Matters

ELECTRICAL CHARACTERISTICS (T_C = 25°C unless otherwise noted)(continued)

Symbol	Parameter	Conditions	Min	Typ	Max	Unit
SWITCHING CHARACTERISTICS						
$t_{d(on)}$	Turn−On Delay Time	V_{DD} = 100 V, I_D = 39 A, V_{GS} = 10 V, R_G = 25 Ω (Note 4)	−	30	70	ns
t_r	Turn−On Rise Time		−	160	330	ns
$t_{d(off)}$	Turn−Off Delay Time		−	150	310	ns
t_f	Turn−Off Fall Time		−	150	310	ns
Q_g	Total Gate Charge	V_{DS} = 160 V, I_D = 39 A, V_{GS} = 10 V (Note 4)	−	38	49	nC
Q_{gs}	Gate−Source Charge		−	11	−	nC
Q_{gd}	Gate−Drain Charge		−	16.5	−	nC
DRAIN−SOURCE DIODE CHARACTERISTICS AND MAXIMUM RATINGS						
I_S	Maximum Continuous Drain−Source Diode Forward Current		−	−	39	A
I_{SM}	Maximum Pulsed Drain−Source Diode Forward Current		−	−	156	A
V_{SD}	Drain−Source Diode Forward Voltage	V_{GS} = 0 V, I_S = 39 A	−	−	1.4	V
t_{rr}	Reverse Recovery Time	V_{GS} = 0 V, I_S = 39 A, dI_F/dt = 100 A/μs	−	152	−	ns
Q_{rr}	Reverse Recovery Charge		−	1.1	−	μC

Product parametric performance is indicated in the Electrical Characteristics for the listed test conditions, unless otherwise noted. Product performance may not be indicated by the Electrical Characteristics if operated under different conditions.

1. Repetitive rating: pulse−width limited by maximum junction temperature.
2. L = 0.85 mH, I_{AS} = 39 A, V_{DD} = 50 V, R_G = 25 Ω, starting T_J = 25°C.
3. I_{SD} ≤ 39 A, di/dt ≤ 200 A/μs, V_{DD} ≤ BV_{DSS}, starting T_J = 25°C.
4. Essentially independent of operating temperature typical characteristics.

Share Feedback
Your Opinion Matters

TYPICAL PERFORMANCE CHARACTERISTICS

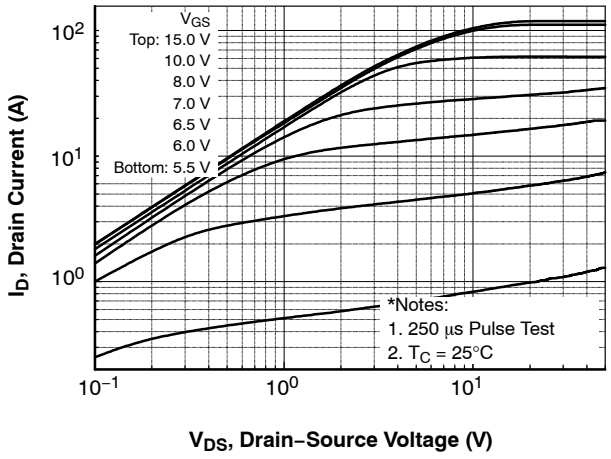

Figure 1. On−Region Characteristics

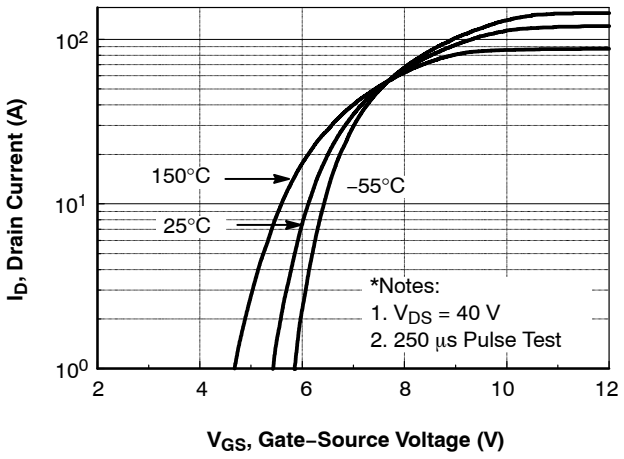

Figure 2. Transfer Characteristics

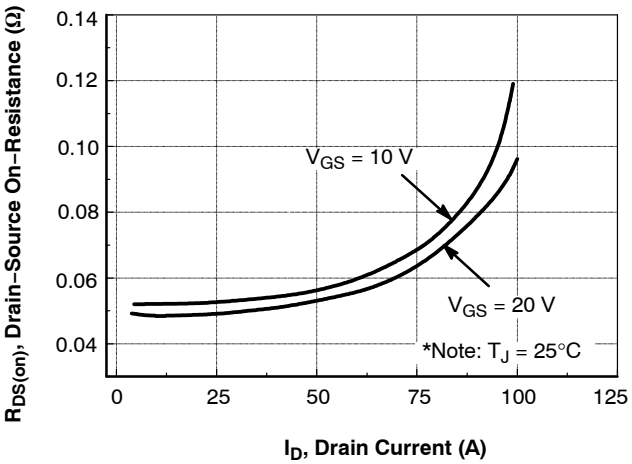

Figure 3. On−Resistance Variation vs. Drain Current and Gate Voltage

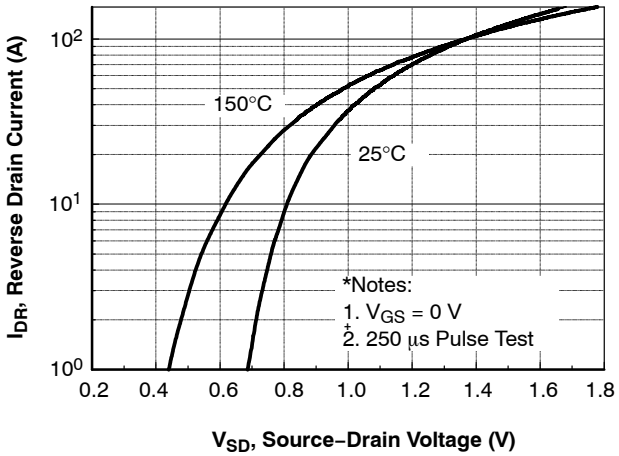

Figure 4. Body Diode Forward Voltage Variation vs. Source Current and Temperature

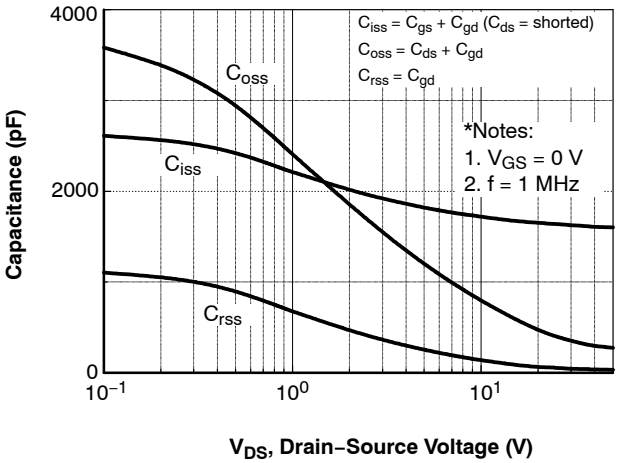

Figure 5. Capacitance Characteristics

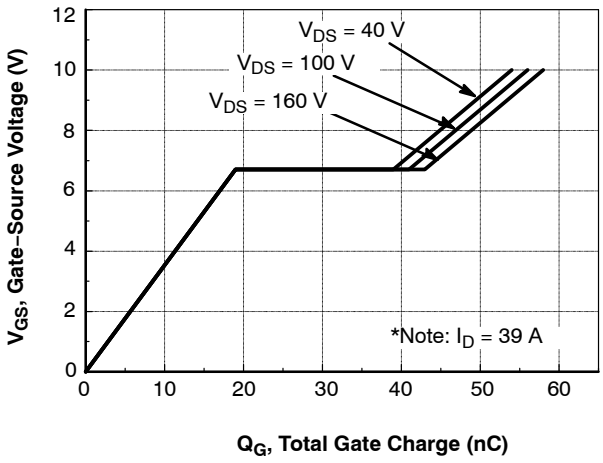

Figure 6. Gate Charge Characteristics

Share Feedback
Your Opinion Matters

TYPICAL PERFORMANCE CHARACTERISTICS (continued)

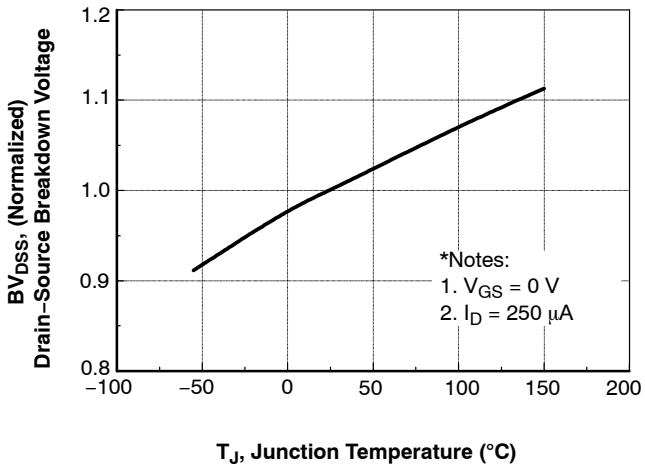

Figure 7. Breakdown Voltage Variation vs. Temperature

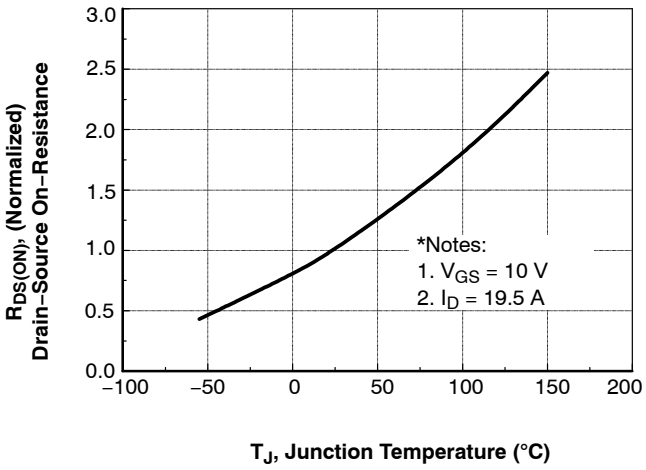

Figure 8. On−Resistance Variation vs. Temperature

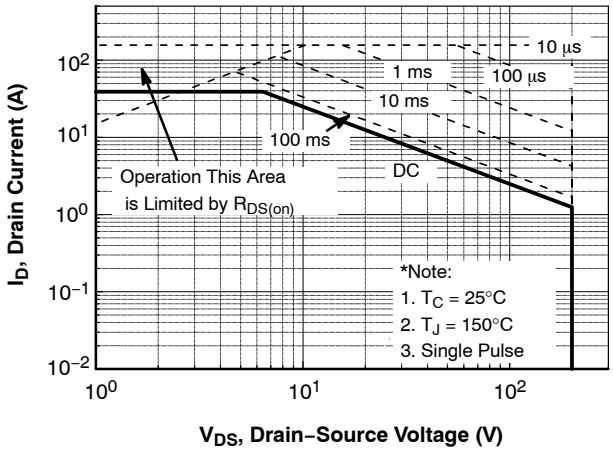

Figure 9. Maximum Safe Operating Area − FDP39N20

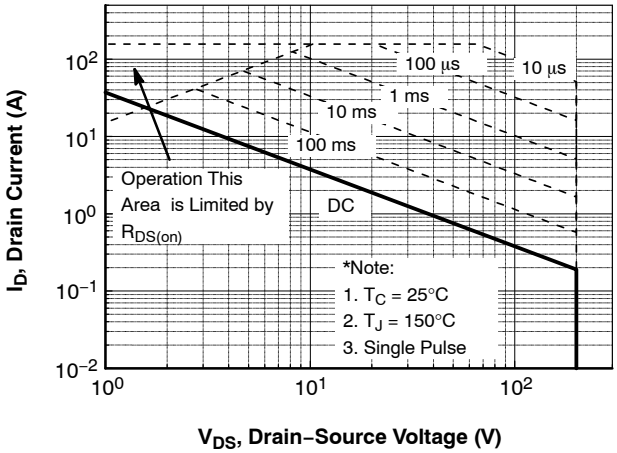

Figure 10. Maximum Safe Operating Area − FDPF39N20

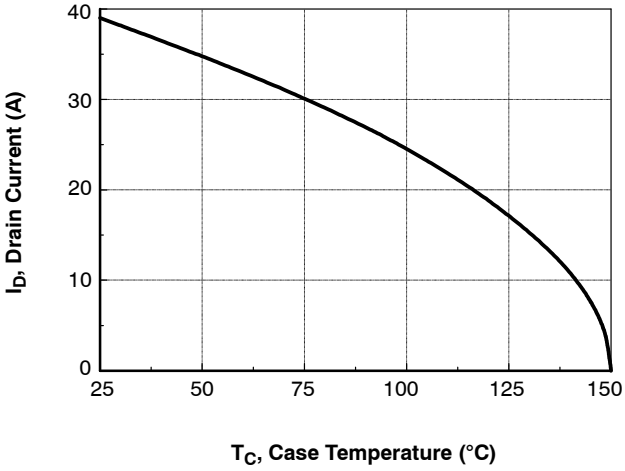

Figure 11. Maximum Drain Current vs. Case Temperature

Share Feedback
Your Opinion Matters

TYPICAL PERFORMANCE CHARACTERISTICS (continued)

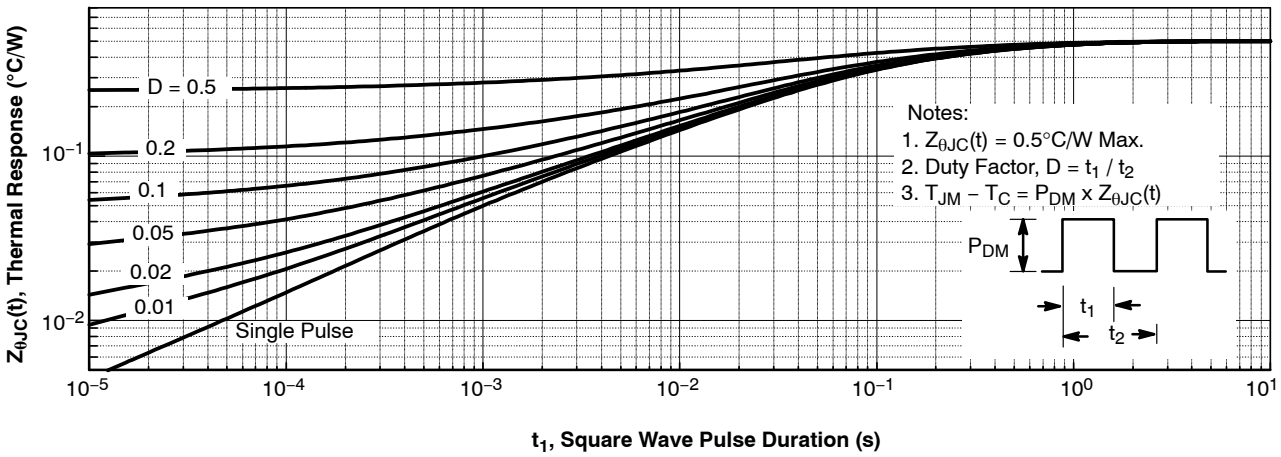

Figure 12. Transient Thermal Response Curve – FDP39N20

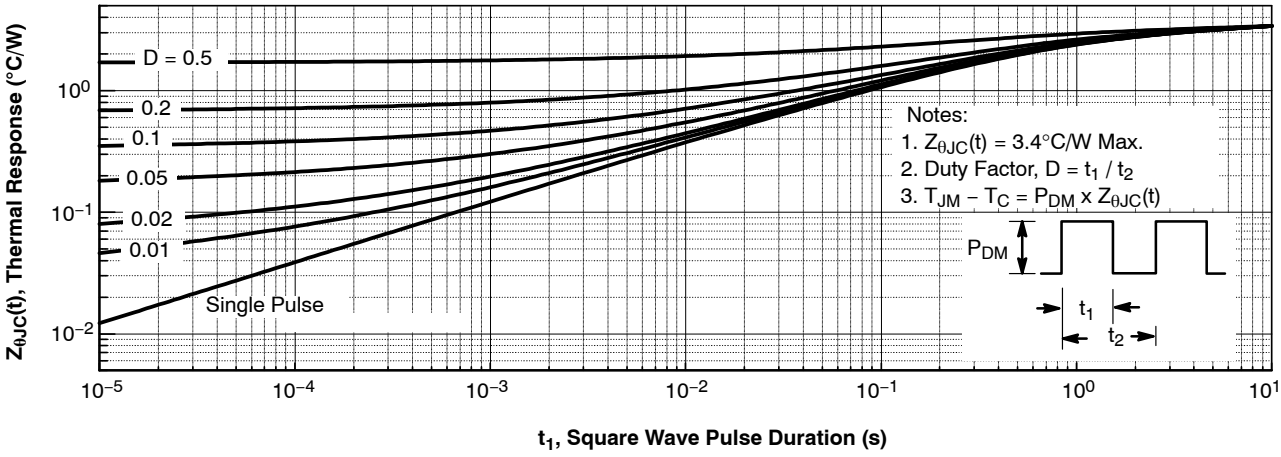

Figure 13. Transient Thermal Response Curve – FDPF39N20

Share Feedback
Your Opinion Matters

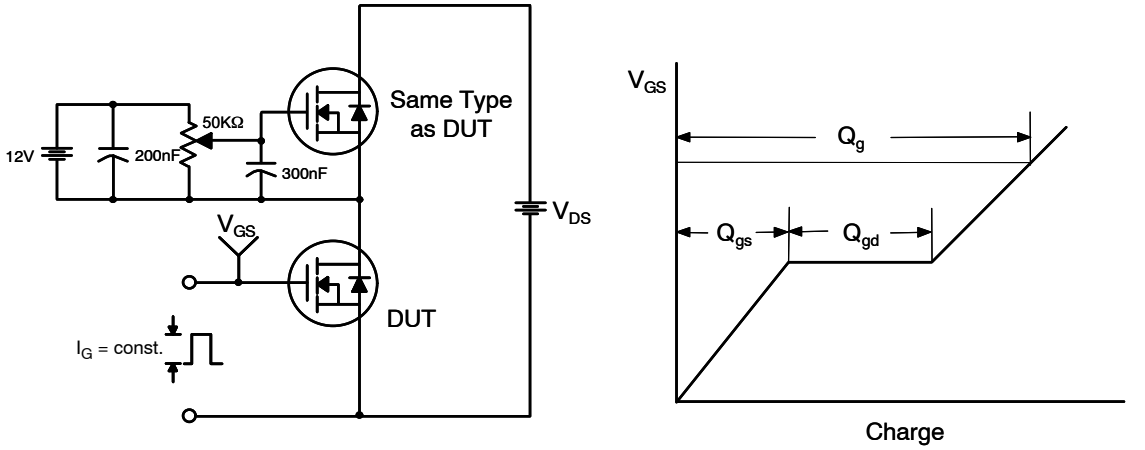

Figure 14. Gate Charge Test Circuit & Waveform

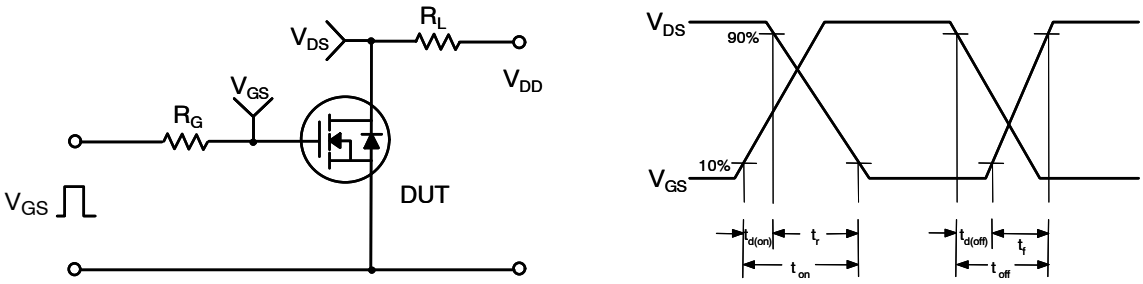

Figure 15. Resistive Switching Test Circuit & Waveforms

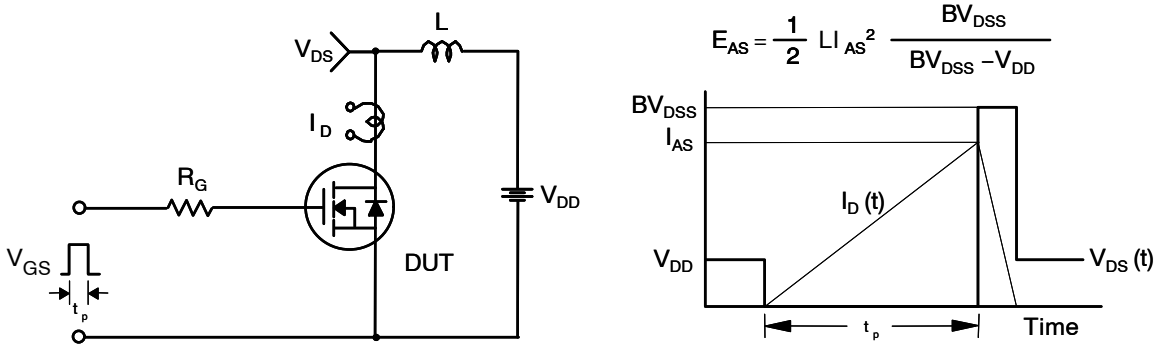

Figure 16. Unclamped Inductive Switching Test Circuit & Waveforms

Share Feedback
Your Opinion Matters

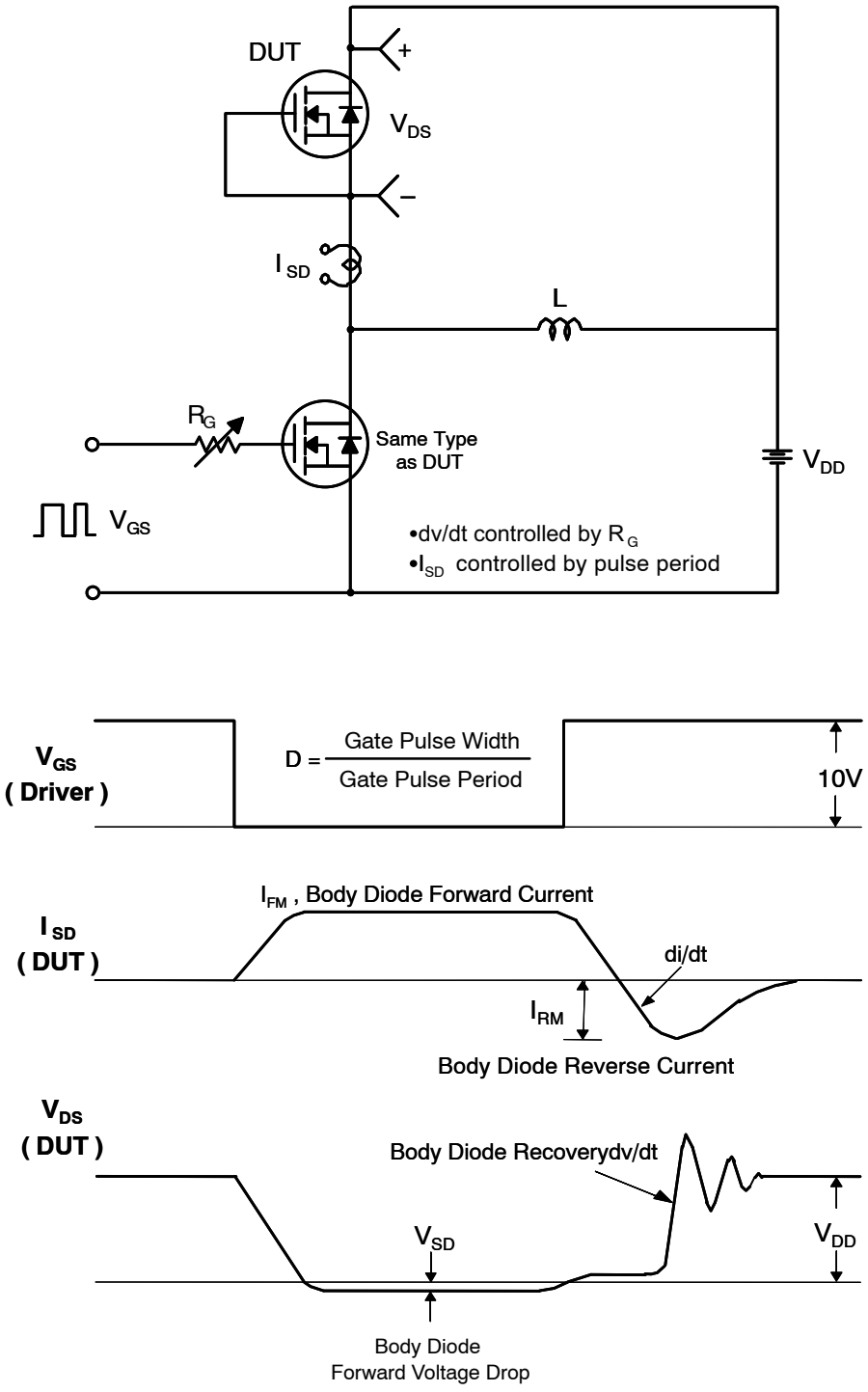

Figure 17. Peak Diode Recovery dv/dt Test Circuit & Waveforms

Share Feedback
Your Opinion Matters

ORDERING INFORMATION

Device	Device Marking	Package	Shipping
FDP39N20	FDP39N20	TO−220	1000 Units / Tube
FDPF39N20	FDPF39N20	TO−220F	1000 Units / Tube
FDPF39N20TLDTU	FDPF39N20T	TO−220F (L−formed)	800 Units / Tube

UniFET is trademark of Semiconductor Components Industries, LLC dba “**onsemi**” or its affiliates and/or subsidiaries in the United States and/or other countries.

Share Feedback
Your Opinion Matters

TO−220 Fullpack, 3−Lead / TO−220F−3SG
CASE 221AT
ISSUE B

DATE 19 JAN 2021

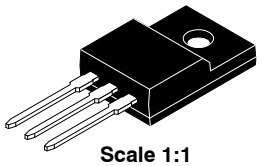

Scale 1:1

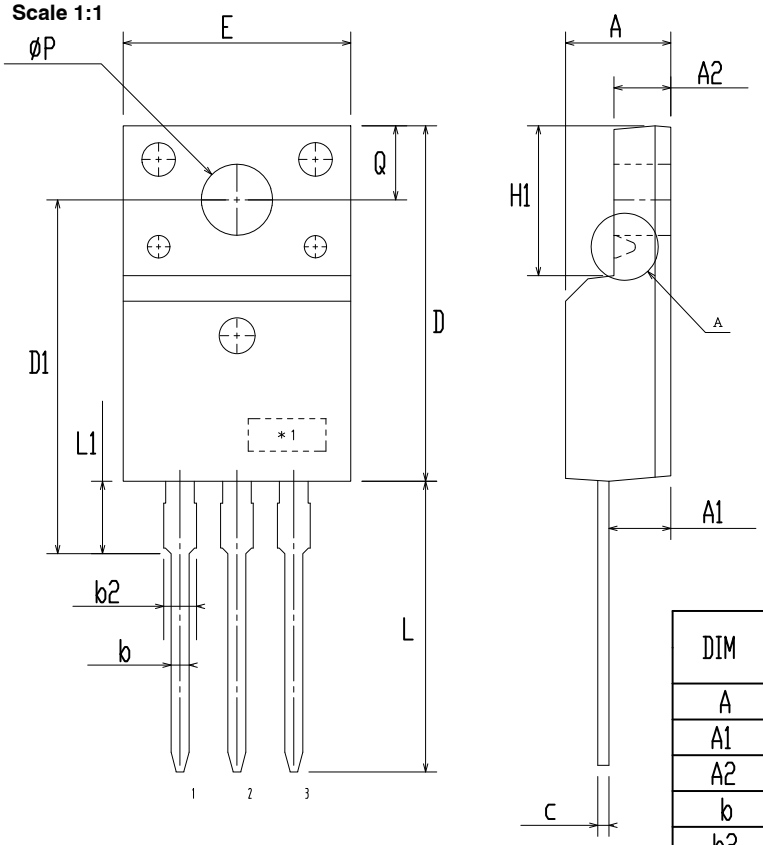

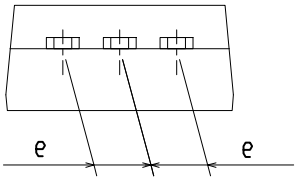

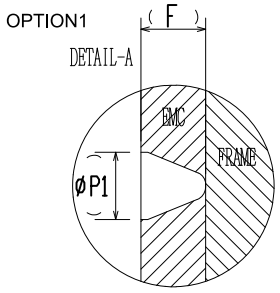

DIM	MILLIMITERS		
	MIN	NOM	MAX
A	4.50	4.70	4.90
A1	2.56	2.76	2.96
A2	2.34	2.54	2.74
b	0.70	0.80	0.90
b2	~	~	1.47
c	0.45	0.50	0.60
D	15.67	15.87	16.07
D1	15.60	15.80	16.00
E	9.96	10.16	10.36
e	2.34	2.54	2.74
F	~	0.84	~
H1	6.48	6.68	6.88
L	12.78	12.98	13.18
L1	3.03	3.23	3.43
ø P	2.98	3.18	3.38
ø P1	~	1.00	~
Q	3.20	3.30	3.40

NOTES:
A. DIMENSION AND TOLERANCE AS ASME Y14.5-2009
B. DIMENSIONS ARE EXCLUSIVE OF BURRS, MOLD FLASH AND TIE BAR PROTRUCSIONS.
C. OPTION 1 - WITH SUPPORT PIN HOLE
OPTION 2 - NO SUPPORT PIN HOLE

DOCUMENT NUMBER:	**98AON67439E**	Electronic versions are uncontrolled except when accessed directly from the Document Repository. Printed versions are uncontrolled except when stamped "CONTROLLED COPY" in red.	
DESCRIPTION:	**TO−220 FULLPACK, 3−LEAD / TO−220F−3SG**		**PAGE 1 OF 1**

onsemi and onsemi are trademarks of Semiconductor Components Industries, LLC dba **onsemi** or its subsidiaries in the United States and/or other countries. **onsemi** reserves the right to make changes without further notice to any products herein. **onsemi** makes no warranty, representation or guarantee regarding the suitability of its products for any particular purpose, nor does **onsemi** assume any liability arising out of the application or use of any product or circuit, and specifically disclaims any and all liability, including without limitation special, consequential or incidental damages. **onsemi** does not convey any license under its patent rights nor the rights of others.

© Semiconductor Components Industries, LLC, 2012

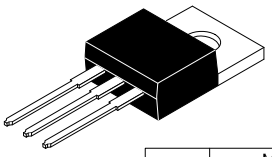

TO−220−3LD
CASE 340AT
ISSUE B

DATE 08 AUG 2022

DIM	MILLIMETERS		
	MIN.	NOM.	MAX.
A	4.00	--	4.70
A1	SEE NOTE "F"		
A2	2.10	--	2.85
b	0.55	--	1.00
b2	1.10	--	1.62
b4	1.42	--	1.62
c	0.36	--	0.60
D	13.90	--	16.30
D1	8.13	--	9.40
D2	11.50	--	14.30
D3	15.42	--	16.51
E	9.65	--	10.67
E1	7.59	--	8.65
e	2.40	--	2.67
H1	6.06	--	6.69
L	12.70	--	14.04
L1	2.70	--	4.10
P	3.50	--	4.00
Q	2.50	--	3.40
z	2.13 REF		
z1	2.06 REF		
Θ	3°	–	5°

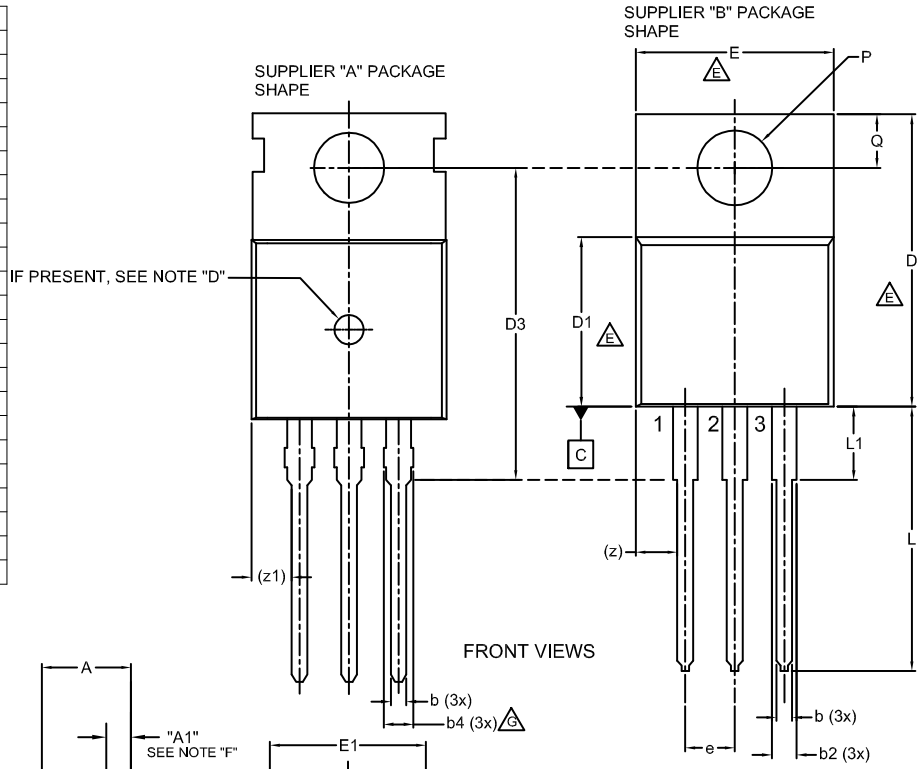

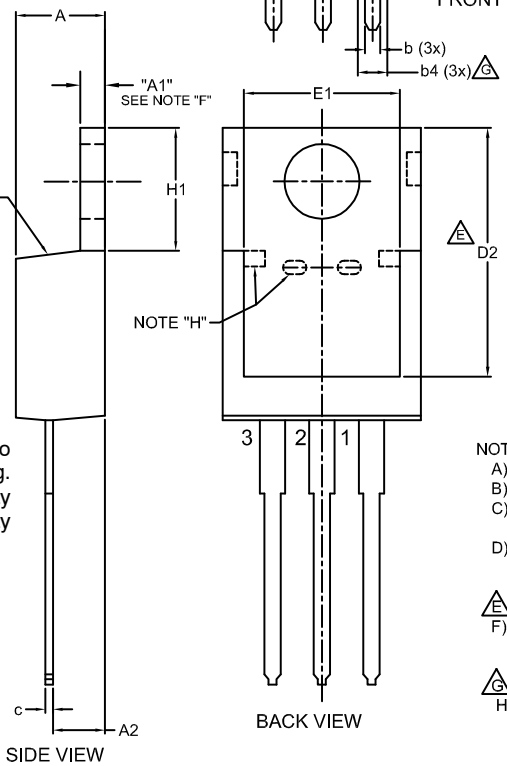

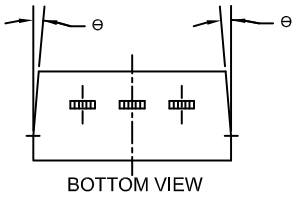

GENERIC MARKING DIAGRAM*



XXXX = Specific Device Code
A = Assembly Location
Y = Year
WW = Work Week
ZZ = Assembly Lot Code

*This information is generic. Please refer to device data sheet for actual part marking. Pb−Free indicator, “G” or microdot “▪”, may or may not be present. Some products may not follow the Generic Marking.

NOTES:
A) REFERENCE JEDEC, TO-220, VARIATION AB
B) ALL DIMENSIONS ARE IN MILLIMETERS.
C) DIMENSIONS COMMON TO ALL PACKAGE SUPPLIERS EXCEPT WHERE NOTED [ ].
D) LOCATION OF MOLDED FEATURE MAY VARY (LOWER LEFT CORNER, LOWER CENTER AND CENTER OF THE PACKAGE)
E) DOES NOT COMPLY JEDEC STANDARD VALUE.
F) "A1" DIMENSIONS AS BELOW:
SINGLE GAUGE = 0.51 - 0.61
DUAL GAUGE = 1.10 - 1.45
G) PRESENCE IS SUPPLIER DEPENDENT
H) SUPPLIER DEPENDENT MOLD LOCKING HOLES IN HEATSINK.

DOCUMENT NUMBER:	**98AON13818G**	Electronic versions are uncontrolled except when accessed directly from the Document Repository. Printed versions are uncontrolled except when stamped “CONTROLLED COPY” in red.
DESCRIPTION:	**TO−220−3LD**	**PAGE 1 OF 1**

onsemi and onsemi are trademarks of Semiconductor Components Industries, LLC dba **onsemi** or its subsidiaries in the United States and/or other countries. **onsemi** reserves the right to make changes without further notice to any products herein. **onsemi** makes no warranty, representation or guarantee regarding the suitability of its products for any particular purpose, nor does **onsemi** assume any liability arising out of the application or use of any product or circuit, and specifically disclaims any and all liability, including without limitation special, consequential or incidental damages. **onsemi** does not convey any license under its patent rights nor the rights of others.

© Semiconductor Components Industries, LLC, 2019

TO−220 FULLPAK 3LD LF
CASE 340BM
ISSUE O

DATE 31 AUG 2016

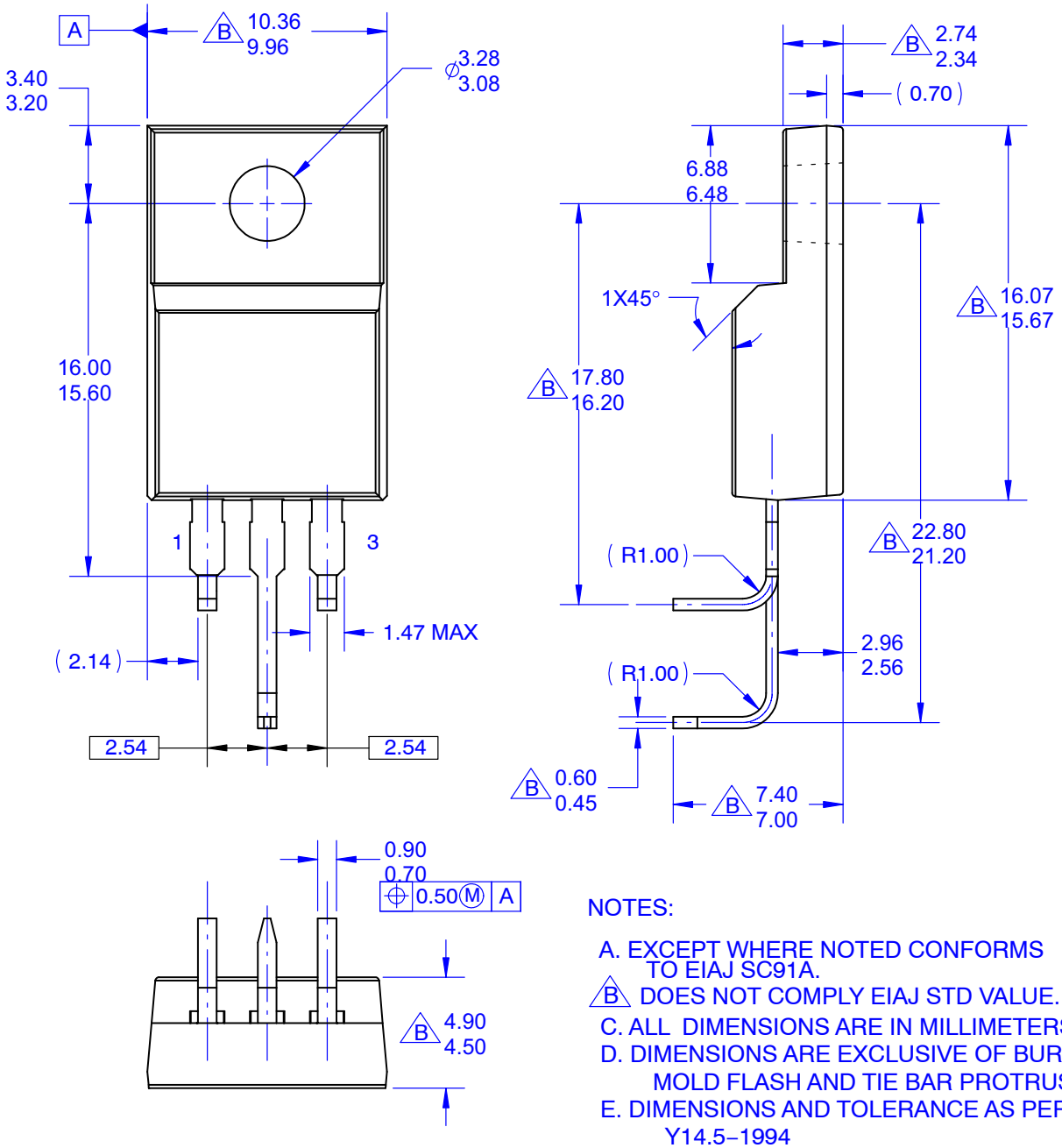

NOTES:

A. EXCEPT WHERE NOTED CONFORMS TO EIAJ SC91A.
B DOES NOT COMPLY EIAJ STD VALUE.
C. ALL DIMENSIONS ARE IN MILLIMETERS.
D. DIMENSIONS ARE EXCLUSIVE OF BURRS, MOLD FLASH AND TIE BAR PROTRUSIONS.
E. DIMENSIONS AND TOLERANCE AS PER ASME Y14.5−1994

DOCUMENT NUMBER:	**98AON13846G**	Electronic versions are uncontrolled except when accessed directly from the Document Repository. Printed versions are uncontrolled except when stamped "CONTROLLED COPY" in red.	
DESCRIPTION:	**TO−220 FULLPAK 3LD LF**		**PAGE 1 OF 1**

onsemi and onsemi are trademarks of Semiconductor Components Industries, LLC dba **onsemi** or its subsidiaries in the United States and/or other countries. **onsemi** reserves the right to make changes without further notice to any products herein. **onsemi** makes no warranty, representation or guarantee regarding the suitability of its products for any particular purpose, nor does **onsemi** assume any liability arising out of the application or use of any product or circuit, and specifically disclaims any and all liability, including without limitation special, consequential or incidental damages. **onsemi** does not convey any license under its patent rights nor the rights of others.

onsemi, , and other names, marks, and brands are registered and/or common law trademarks of Semiconductor Components Industries, LLC dba "**onsemi**" or its affiliates and/or subsidiaries in the United States and/or other countries. **onsemi** owns the rights to a number of patents, trademarks, copyrights, trade secrets, and other intellectual property. A listing of **onsemi**'s product/patent coverage may be accessed at www.onsemi.com/site/pdf/Patent−Marking.pdf. **onsemi** reserves the right to make changes at any time to any products or information herein, without notice. The information herein is provided "as−is" and **onsemi** makes no warranty, representation or guarantee regarding the accuracy of the information, product features, availability, functionality, or suitability of its products for any particular purpose, nor does **onsemi** assume any liability arising out of the application or use of any product or circuit, and specifically disclaims any and all liability, including without limitation special, consequential or incidental damages. Buyer is responsible for its products and applications using **onsemi** products, including compliance with all laws, regulations and safety requirements or standards, regardless of any support or applications information provided by **onsemi**. "Typical" parameters which may be provided in **onsemi** data sheets and/or specifications can and do vary in different applications and actual performance may vary over time. All operating parameters, including "Typicals" must be validated for each customer application by customer's technical experts. **onsemi** does not convey any license under any of its intellectual property rights nor the rights of others. **onsemi** products are not designed, intended, or authorized for use as a critical component in life support systems or any FDA Class 3 medical devices or medical devices with a same or similar classification in a foreign jurisdiction or any devices intended for implantation in the human body. Should Buyer purchase or use **onsemi** products for any such unintended or unauthorized application, Buyer shall indemnify and hold **onsemi** and its officers, employees, subsidiaries, affiliates, and distributors harmless against all claims, costs, damages, and expenses, and reasonable attorney fees arising out of, directly or indirectly, any claim of personal injury or death associated with such unintended or unauthorized use, even if such claim alleges that **onsemi** was negligent regarding the design or manufacture of the part. **onsemi** is an Equal Opportunity/Affirmative Action Employer. This literature is subject to all applicable copyright laws and is not for resale in any manner.

ADDITIONAL INFORMATION

TECHNICAL PUBLICATIONS:
Technical Library: www.onsemi.com/design/resources/technical−documentation
onsemi Website: www.onsemi.com

ONLINE SUPPORT: www.onsemi.com/support
For additional information, please contact your local Sales Representative at www.onsemi.com/support/sales

ENTEGRECİ

Bu belge www.entegreci.com üzerinden sunulmaktadır.

Elektronik komponent tedarikinde Entegreci

Entegreci, Eskişehir merkezli, Türkiye geneline satış yapan bir elektronik komponent mağazasıdır. Entegreler (IC), mikrodenetleyiciler, transistörler, diyotlar, pasif elemanlar, konnektörler, modüller ve geliştirme kartları tek adetten seri üretim adetlerine kadar satılır. Ürün sayfalarında güncel stok durumunu, fiyatı ve datasheet bağlantısını bulabilirsiniz.

Parça koduyla arama

Üretici parça numarasını yazın; stok ve fiyatı hemen görün.

www.entegreci.com

Ürün kategorileri

Entegreden kapasitöre tüm elektronik komponent kategorileri.

Kategorilere göz atın

Üreticiler

Aradığınız üreticinin ürünlerini tek sayfada inceleyin.

Üreticileri görün

Toplu alım ve teklif

Listede olmayan ya da yüksek adetli parçalar için teklif isteyin.

Teklif isteyin

www.entegreci.com | **destek@entegreci.com** | **0850 305 90 34**

Entegreci is an online electronic components store based in Türkiye. Search by manufacturer part number to see stock, prices and datasheets for integrated circuits, microcontrollers, transistors, passive components and connectors, or request a quote for parts that are not listed.

Bu sayfa Entegreci tarafından eklenmiştir. Belgenin önceki sayfaları asıl yayıncısına aittir ve içeriği değiştirilmemiştir; en güncel sürüm için belgenin yayıncısına başvurun.