FDMA1024NZ-VB Datasheet

Dual N-Channel 30-V (D-S) MOSFET

PRODUCT SUMMARY			
V_{DS} (V)	$R_{DS(on)}$ (Ω)	I_D (A)	Q_g (Typ.)
30	0.022 at V_{GS} = 10 V	5.8	15 nC
	0.026 at V_{GS} = 4.5 V	5.0	

FEATURES

- **Halogen-free According to IEC 61249-2-21 Definition**
- Trench Power MOSFET
- 100 % UIS Tested
- 100 % R_g Tested
- Compliant to RoHS Directive 2002/95/EC

Pb-free
RoHS COMPLIANT
HALOGEN FREE

APPLICATIONS

- Portable devices such as smart phones, tablet PCs and mobile computing
  - Load switch
  - DC/DC converter
  - Power management

DFN 2x2 EP

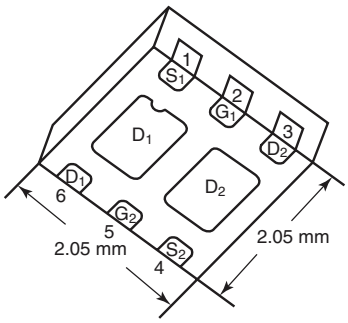

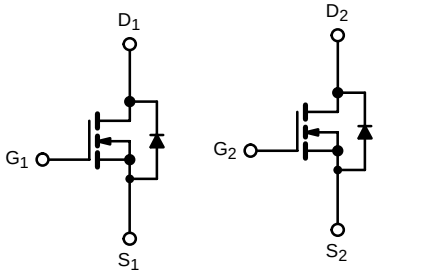

N-Channel MOSFET N-Channel MOSFET

ABSOLUTE MAXIMUM RATINGS T_A = 25 °C, unless otherwise noted				
Parameter		**Symbol**	**Limit**	**Unit**
Drain-Source Voltage		V_{DS}	30	V
Gate-Source Voltage		V_{GS}	± 12	
Continuous Drain Current (T_J = 150 °C)	T_C = 25 °C	I_D	5.8[a]	A
	T_C = 70 °C		5.0	
	T_A = 25 °C		4.8[b, c]	
	T_A = 70 °C		4.2[b, c]	
Pulsed Drain Current		I_{DM}	30	
Continuous Source-Drain Diode Current	T_C = 25 °C	I_S	2.25	
	T_A = 25 °C		1.48[b, c]	
Single Pulse Avalanche Current	L = 0.1 mH	I_{AS}	5	
Single Pulse Avalanche Energy		E_{AS}	1.25	mJ
Maximum Power Dissipation	T_C = 25 °C	P_D	2.7	W
	T_C = 70 °C		1.77	
	T_A = 25 °C		1.78[b, c]	
	T_A = 70 °C		1.14[b, c]	
Operating Junction and Storage Temperature Range		T_J, T_{stg}	- 55 to 150	°C

THERMAL RESISTANCE RATINGS					
Parameter		**Symbol**	**Typical**	**Maximum**	**Unit**
Maximum Junction-to-Ambient[a, c]	t ≤ 10 s	R_{thJA}	58	65	°C/W
Maximum Junction-to-Foot (Drain)	Steady State	R_{thJF}	18	25	

Notes:
a. Package limited, T_C = 25 °C.
b. Surface Mounted on 1" x 1" FR4 board.
c. t = 10 s.

SPECIFICATIONS T_J = 25 °C, unless otherwise noted						
Parameter	**Symbol**	**Test Conditions**	**Min.**	**Typ.**	**Max.**	**Unit**
Static						
Drain-Source Breakdown Voltage	V_{DS}	V_{GS} = 0 V, I_D = 250 µA	30			V
V_{DS} Temperature Coefficient	$\Delta V_{DS}/T_J$	I_D = 250 µA		32		mV/°C
$V_{GS(th)}$ Temperature Coefficient	$\Delta V_{GS(th)}/T_J$			- 5.0		
Gate-Source Threshold Voltage	$V_{GS(th)}$	V_{DS} = V_{GS} , I_D = 250 µA	1.0		2.5	V
Gate-Source Leakage	I_{GSS}	V_{DS} = 0 V, V_{GS} = ± 12 V			± 100	nA
Zero Gate Voltage Drain Current	I_{DSS}	V_{DS} = 30 V, V_{GS} = 0 V			1	µA
		V_{DS} = 30 V, V_{GS} = 0 V, T_J = 55 °C			10	
On-State Drain Current[a]	$I_{D(on)}$	$V_{DS} \geq$ 5 V, V_{GS} = 10 V	10			A
Drain-Source On-State Resistance[a]	$R_{DS(on)}$	V_{GS} = 10 V, I_D = 3 A		0.022		Ω
		V_{GS} = 4.5 V, I_D = 2 A		0.026		
Forward Transconductance[a]	g_{fs}	V_{DS} = 10 V, I_D = 5 A		16		S
Dynamic[b]						
Input Capacitance	C_{iss}	V_{DS} = 15 V, V_{GS} = 0 V, f = 1 MHz		886		pF
Output Capacitance	C_{oss}			117		
Reverse Transfer Capacitance	C_{rss}			55		
Total Gate Charge	Q_g	V_{DS} = 15 V, V_{GS} = 10 V, I_D = 5 A		15		nC
		V_{DS} = 15 V, V_{GS} = 4.5 V, I_D = 5 A		3.7	5.6	
Gate-Source Charge	Q_{gs}			1.4		
Gate-Drain Charge	Q_{gd}			1.05		
Gate Resistance	R_g	f = 1 MHz	0.8	4.3	8.6	Ω
Turn-On Delay Time	$t_{d(on)}$	V_{DD} = 15 V, R_L = 3 Ω $I_D \cong$ 5 A, V_{GEN} = 4.5 V, R_g = 1 Ω		12	24	ns
Rise Time	t_r			55	100	
Turn-Off Delay Time	$t_{d(off)}$			11	22	
Fall Time	t_f			8	16	
Turn-On Delay Time	$t_{d(on)}$	V_{DD} = 15 V, R_L = 3 Ω $I_D \cong$ 5 A, V_{GEN} = 10 V, R_g = 1 Ω		4	8	
Rise Time	t_r			9	18	
Turn-Off Delay Time	$t_{d(off)}$			10	20	
Fall Time	t_f			6	12	
Drain-Source Body Diode Characteristics						
Continuous Source-Drain Diode Current	I_S	T_C = 25 °C			2.25	A
Pulse Diode Forward Current	I_{SM}				24	
Body Diode Voltage	V_{SD}	I_S = 2 A, V_{GS} = 0 V		0.8	1.2	V
Body Diode Reverse Recovery Time	t_{rr}	I_F = 5 A, dI/dt = 100 A/µs, T_J = 25 °C		11	20	ns
Body Diode Reverse Recovery Charge	Q_{rr}			4	8	nC
Reverse Recovery Fall Time	t_a			7		ns
Reverse Recovery Rise Time	t_b			4		

Notes:
a. Pulse test; pulse width ≤ 300 µs, duty cycle ≤ 2 %
b. Guaranteed by design, not subject to production testing.

Stresses beyond those listed under "Absolute Maximum Ratings" may cause permanent damage to the device. These are stress ratings only, and functional operation of the device at these or any other conditions beyond those indicated in the operational sections of the specifications is not implied. Exposure to absolute maximum rating conditions for extended periods may affect device reliability.

TYPICAL CHARACTERISTICS 25 °C, unless otherwise noted

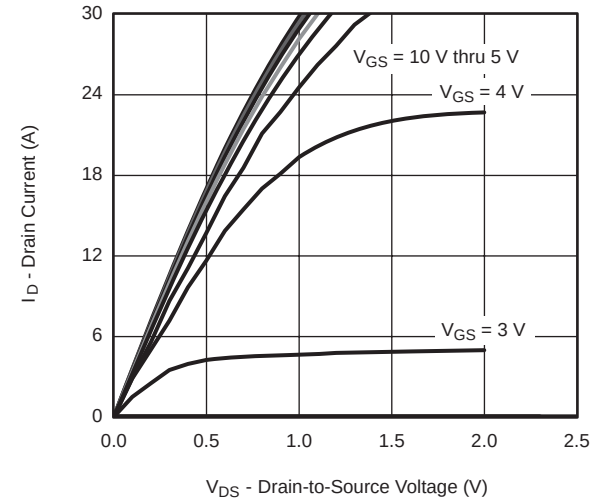

Output Characteristics

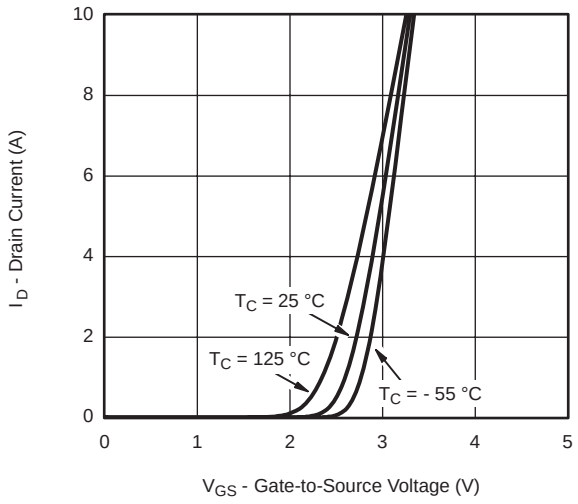

Transfer Characteristics

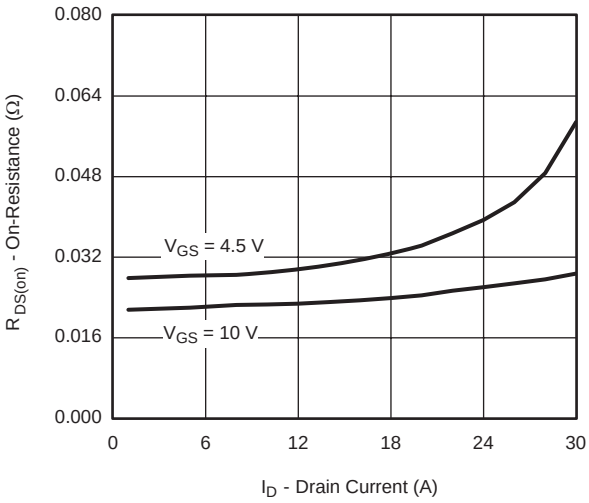

On-Resistance vs. Drain Current

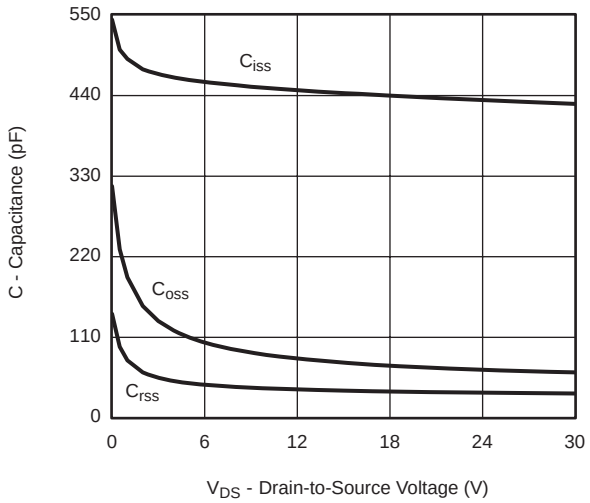

Capacitance

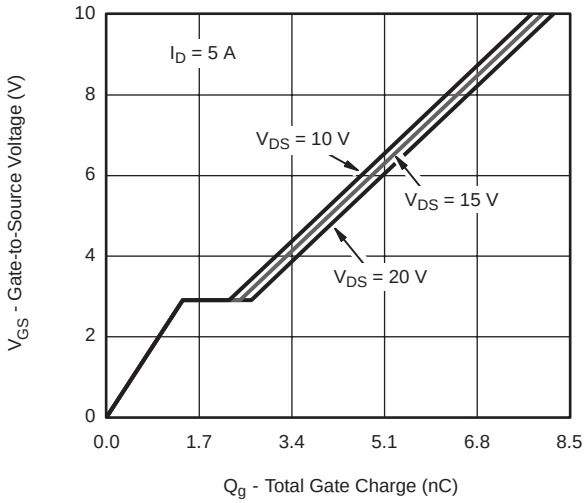

Gate Charge

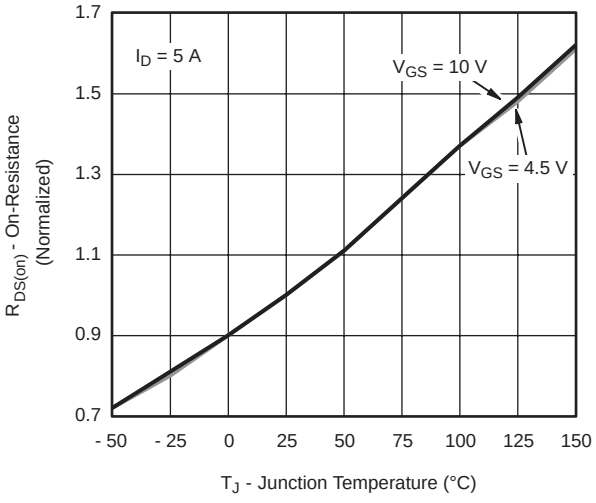

On-Resistance vs. Junction Temperature

TYPICAL CHARACTERISTICS 25 °C, unless otherwise noted

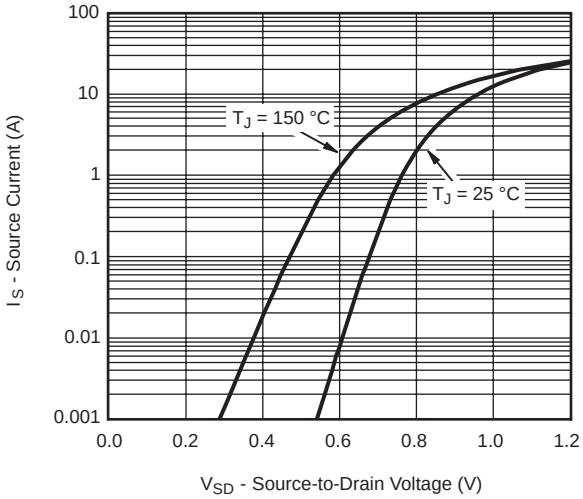

Source-Drain Diode Forward Voltage

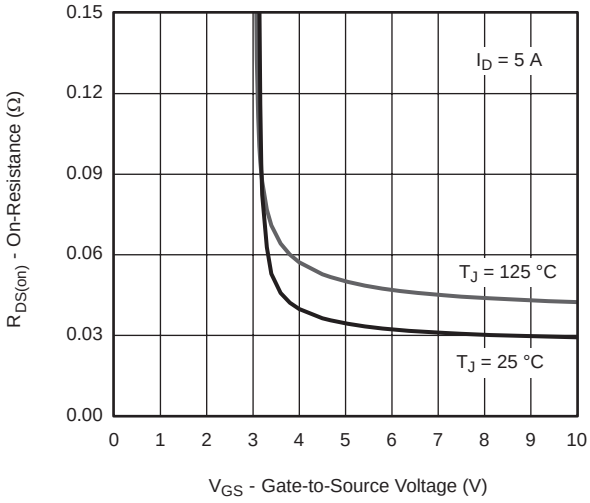

On-Resistance vs. Gate-to-Source Voltage

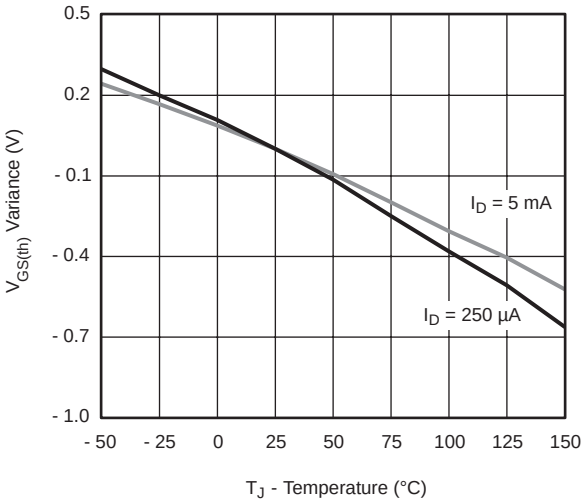

Threshold Voltage

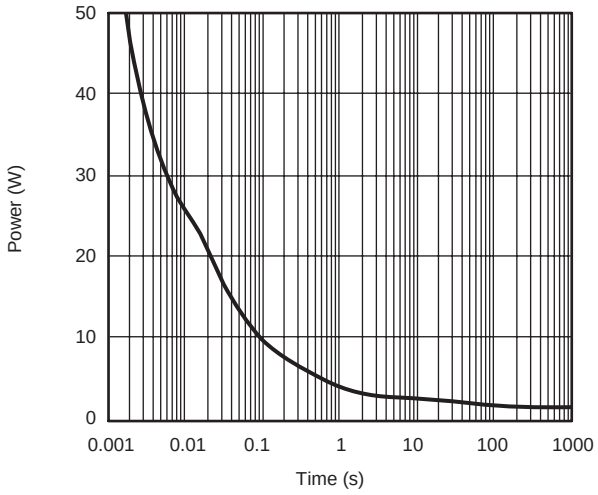

Single Pulse Power

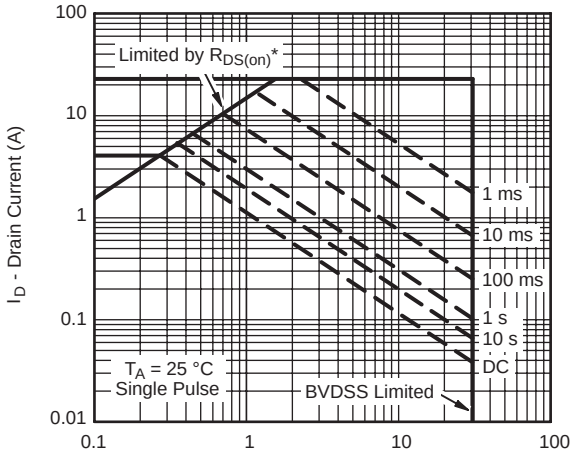

* V_{GS} > minimum V_{GS} at which $R_{DS(on)}$ is specified

Safe Operating Area, Junction-to-Ambient

TYPICAL CHARACTERISTICS 25 °C, unless otherwise noted

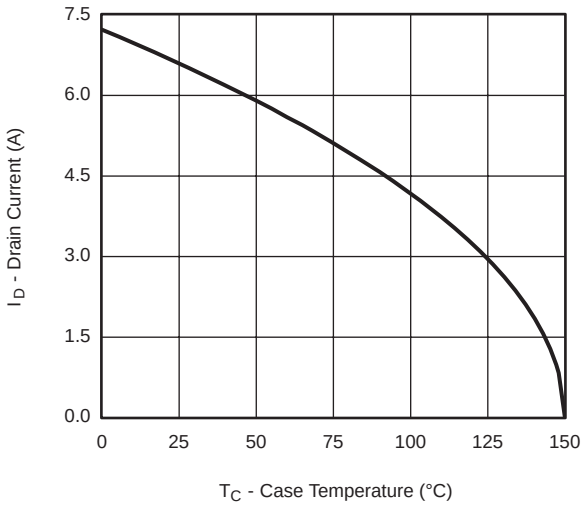

Current Derating*

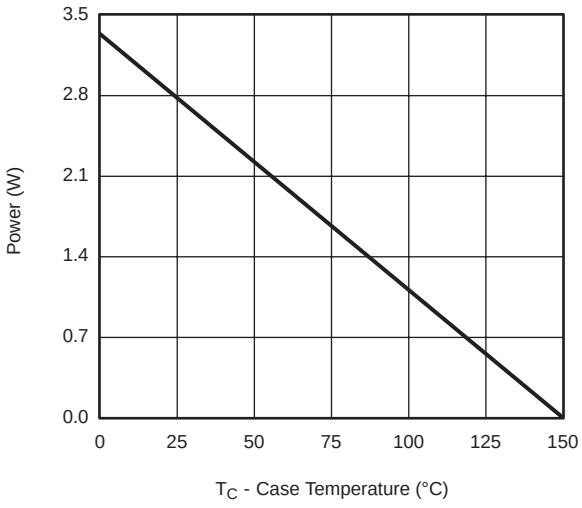

Power, Junction-to-Foot

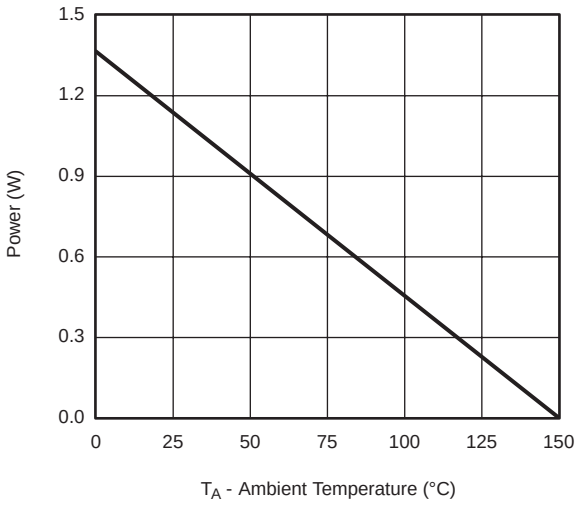

Power, Junction-to-Ambient

* The power dissipation P_D is based on $T_{J(max)}$ = 150 °C, using junction-to-case thermal resistance, and is more useful in settling the upper dissipation limit for cases where additional heatsinking is used. It is used to determine the current rating, when this rating falls below the package limit.

TYPICAL CHARACTERISTICS 25 °C, unless otherwise noted

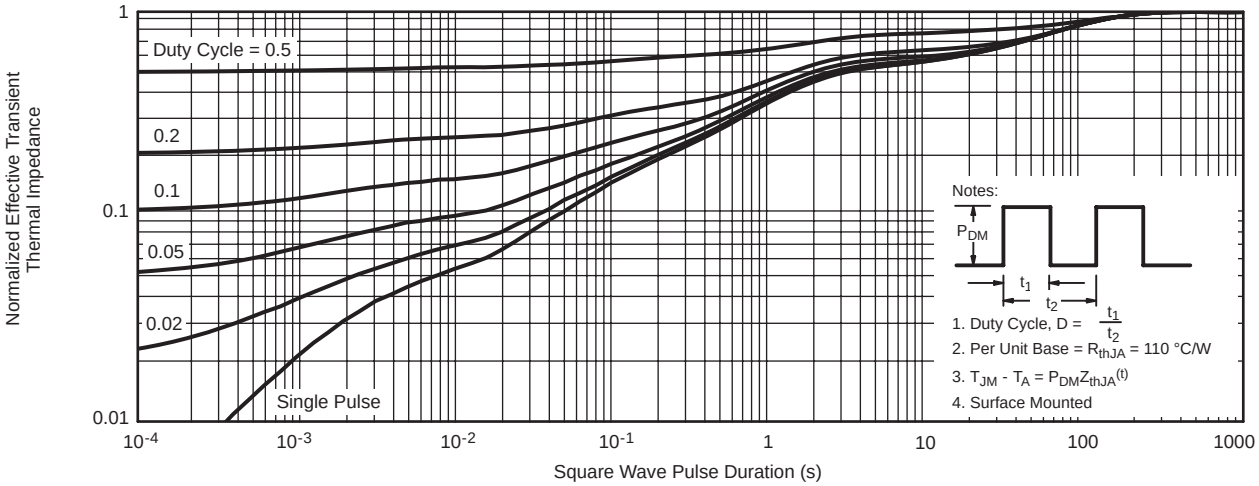

Normalized Thermal Transient Impedance, Junction-to-Ambient

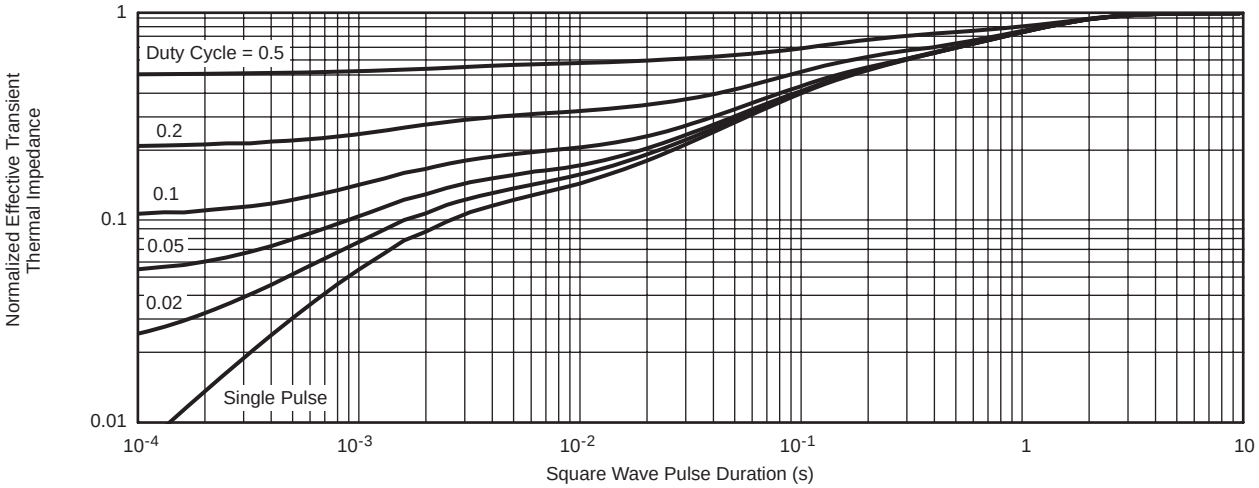

Normalized Thermal Transient Impedance, Junction-to-Foot

DFN 2x2

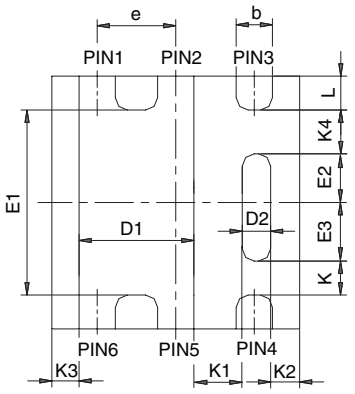

BACKSIDE VIEW OF SINGLE

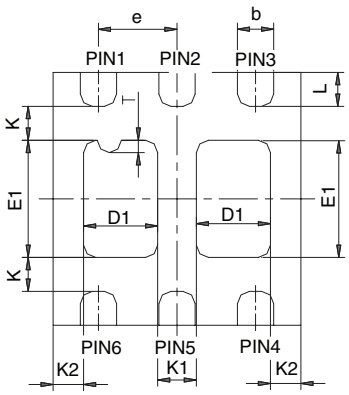

BACKSIDE VIEW OF DUAL

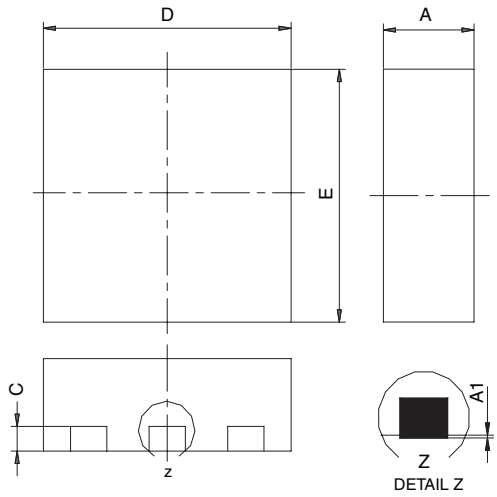

DETAIL Z

Notes:
1. All dimensions are in millimeters
2. Package outline exclusive of mold flash and metal burr
3. Package outline inclusive of plating

DIM	SINGLE PAD						DUAL PAD					
	MILLIMETERS			INCHES			MILLIMETERS			INCHES		
	Min	Nom	Max	Min	Nom	Max	Min	Nom	Max	Min	Nom	Max
A	0.675	0.75	0.80	0.027	0.030	0.032	0.675	0.75	0.80	0.027	0.030	0.032
A1	0	-	0.05	0	-	0.002	0	-	0.05	0	-	0.002
b	0.23	0.30	0.38	0.009	0.012	0.015	0.23	0.30	0.38	0.009	0.012	0.015
C	0.15	0.20	0.25	0.006	0.008	0.010	0.15	0.20	0.25	0.006	0.008	0.010
D	1.98	2.05	2.15	0.078	0.081	0.085	1.98	2.05	2.15	0.078	0.081	0.085
D1	0.85	0.95	1.05	0.033	0.037	0.041	0.513	0.613	0.713	0.020	0.024	0.028
D2	0.135	0.235	0.335	0.005	0.009	0.013						
E	1.98	2.05	2.15	0.078	0.081	0.085	1.98	2.05	2.15	0.078	0.081	0.085
E1	1.40	1.50	1.60	0.055	0.059	0.063	0.85	0.95	1.05	0.033	0.037	0.041
E2	0.345	0.395	0.445	0.014	0.016	0.018						
E3	0.425	0.475	0.525	0.017	0.019	0.021						
e	0.65 BSC			0.026 BSC			0.65 BSC			0.026 BSC		
K	0.275 TYP			0.011 TYP			0.275 TYP			0.011 TYP		
K1	0.400 TYP			0.016 TYP			0.320 TYP			0.013 TYP		
K2	0.240 TYP			0.009 TYP			0.252 TYP			0.010 TYP		
K3	0.225 TYP			0.009 TYP								
K4	0.355 TYP			0.014 TYP								
L	0.175	0.275	0.375	0.007	0.011	0.015	0.175	0.275	0.375	0.007	0.011	0.015
T							0.05	0.10	0.15	0.002	0.004	0.006

ECN: C-07431 – Rev. C, 06-Aug-07
DWG: 5934

Disclaimer

All products due to improve reliability, function or design or for other reasons, product specifications and data are subject to change without notice.

Taiwan VBsemi Electronics Co., Ltd., branches, agents, employees, and all persons acting on its or their representatives (collectively, the "Taiwan VBsemi"), assumes no responsibility for any errors, inaccuracies or incomplete data contained in the table or any other any disclosure of any information related to the product.(www.VBsemi.com)

Taiwan VBsemi makes no guarantee, representation or warranty on the product for any particular purpose of any goods or continuous production. To the maximum extent permitted by applicable law on Taiwan VBsemi relinquished: (1) any application and all liability arising out of or use of any products; (2) any and all liability, including but not limited to special, consequential damages or incidental ; (3) any and all implied warranties, including a particular purpose, non-infringement and merchantability guarantee.

Statement on certain types of applications are based on knowledge of the product is often used in a typical application of the general product VBsemi Taiwan demand that the Taiwan VBsemi of. Statement on whether the product is suitable for a particular application is non-binding. It is the customer's responsibility to verify specific product features in the products described in the specification is appropriate for use in a particular application. Parameter data sheets and technical specifications can be provided may vary depending on the application and performance over time. All operating parameters, including typical parameters must be made by customer's technical experts validated for each customer application. Product specifications do not expand or modify Taiwan VBsemi purchasing terms and conditions, including but not limited to warranty herein.

Unless expressly stated in writing, Taiwan VBsemi products are not intended for use in medical, life saving, or life sustaining applications or any other application. Wherein VBsemi product failure could lead to personal injury or death, use or sale of products used in Taiwan VBsemi such applications using client did not express their own risk. Contact your authorized Taiwan VBsemi people who are related to product design applications and other terms and conditions in writing.

The information provided in this document and the company's products without a license, express or implied, by estoppel or otherwise, to any intellectual property rights granted to the VBsemi act or document. Product names and trademarks referred to herein are trademarks of their respective representatives will be all.

Material Category Policy

Taiwan VBsemi Electronics Co., Ltd., hereby certify that all of the products are determined to be RoHS compliant and meets the definition of restrictions under Directive of the European Parliament 2011/65 / EU, 2011 Nian. 6. 8 Ri Yue restrict the use of certain hazardous substances in electrical and electronic equipment (EEE) - modification, unless otherwise specified as inconsistent.(www.VBsemi.com)

Please note that some documents may still refer to Taiwan VBsemi RoHS Directive 2002/95 / EC. We confirm that all products identified as consistent with the Directive 2002/95 / EC European Directive 2011/65 /.

Taiwan VBsemi Electronics Co., Ltd. hereby certify that all of its products comply identified as halogen-free halogen-free standards required by the JEDEC JS709A. Please note that some Taiwanese VBsemi documents still refer to the definition of IEC 61249-2-21, and we are sure that all products conform to confirm compliance with IEC 61249-2-21 standard level JS709A.

ENTEGRECİ

Bu belge www.entegreci.com üzerinden sunulmaktadır.

Elektronik komponent tedarikinde Entegreci

Entegreci, Eskişehir merkezli, Türkiye geneline satış yapan bir elektronik komponent mağazasıdır. Entegreler (IC), mikrodenetleyiciler, transistörler, diyotlar, pasif elemanlar, konnektörler, modüller ve geliştirme kartları tek adetten seri üretim adetlerine kadar satılır. Ürün sayfalarında güncel stok durumunu, fiyatı ve datasheet bağlantısını bulabilirsiniz.

Parça koduyla arama

Üretici parça numarasını yazın; stok ve fiyatı hemen görün.

www.entegreci.com

Ürün kategorileri

Entegreden kapasitöre tüm elektronik komponent kategorileri.

Kategorilere göz atın

Üreticiler

Aradığınız üreticinin ürünlerini tek sayfada inceleyin.

Üreticileri görün

Toplu alım ve teklif

Listede olmayan ya da yüksek adetli parçalar için teklif isteyin.

Teklif isteyin

www.entegreci.com | **destek@entegreci.com** | **0850 305 90 34**

Entegreci is an online electronic components store based in Türkiye. Search by manufacturer part number to see stock, prices and datasheets for integrated circuits, microcontrollers, transistors, passive components and connectors, or request a quote for parts that are not listed.

Bu sayfa Entegreci tarafından eklenmiştir. Belgenin önceki sayfaları asıl yayıncısına aittir ve içeriği değiştirilmemiştir; en güncel sürüm için belgenin yayıncısına başvurun.