March 2015

FDD8782/FDU8782
N-Channel PowerTrench® MOSFET
25V, 35A, 11mΩ

General Description

This N-Channel MOSFET has been designed specifically to improve the overall efficiency of DC/DC converters using either synchronous or conventional switching PWM controllers. It has been optimized for low gate charge, low $r_{DS(on)}$ and fast switching speed.

Application

- Vcore DC-DC for Desktop Computers and Servers
- VRM for Intermediate Bus Architecture

Features

- Max $r_{DS(on)}$ = 11.0mΩ at V_{GS} = 10V, I_D = 35A
- Max $r_{DS(on)}$ = 14.0mΩ at V_{GS} = 4.5V, I_D = 35A
- Low gate charge: $Q_{g(10)}$ = 18nC(Typ), V_{GS} = 10V
- Low gate resistance
- Avalanche rated and 100% tested
- RoHS Compliant

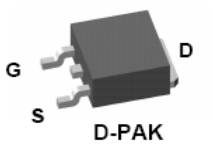

D-PAK
(TO-252)

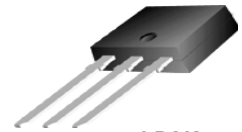

I-PAK
(TO-251AA)

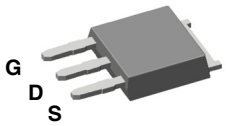

Short Lead I-PAK

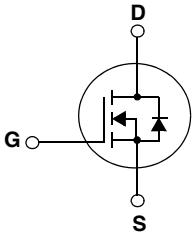

MOSFET Maximum Ratings T_C = 25°C unless otherwise noted

Symbol	Parameter		Ratings	Units
V_{DS}	Drain to Source Voltage		25	V
V_{GS}	Gate to Source Voltage		±20	V
I_D	Drain Current -Continuous (Package Limited)		35	A
	-Continuous (Die Limited)		54	
	-Pulsed	(Note 1)	321	
E_{AS}	Single Pulse Avalanche Energy	(Note 2)	72	mJ
P_D	Power Dissipation		50	W
T_J, T_{STG}	Operating and Storage Temperature		-55 to 175	°C

Thermal Characteristics

$R_{\theta JC}$	Thermal Resistance, Junction to Case TO-252,TO-251	3.0	°C/W
$R_{\theta JA}$	Thermal Resistance, Junction to Ambient TO-252,TO-251	100	°C/W
$R_{\theta JA}$	Thermal Resistance, Junction to Ambient TO-252,1in^2 copper pad area	52	°C/W

Package Marking and Ordering Information

Device Marking	Device	Package	Reel Size	Tape Width	Quantity
FDD8782	FDD8782	TO-252AA	13”	16mm	2500 units
FDU8782	FDU8782	TO-251AA	N/A(Tube)	N/A	75 units
FDU8782	FDU8782_F071	TO-251AA	N/A(Tube)	N/A	75 units

©2009 Fairchild Semiconductor Corporation

Electrical Characteristics T_J = 25°C unless otherwise noted

Symbol	Parameter	Test Conditions	Min	Typ	Max	Units
Off Characteristics						
B_{VDSS}	Drain to Source Breakdown Voltage	I_D = 250μA, V_{GS} = 0V	25			V
$\frac{\Delta B_{VDSS}}{\Delta T_J}$	Breakdown Voltage Temperature Coefficient	I_D = 250μA, referenced to 25°C		14.3		mV/°C
I_{DSS}	Zero Gate Voltage Drain Current	V_{DS} = 20V, V_{GS} = 0V			1	μA
		T_J = 150°C			250	
I_{GSS}	Gate to Source Leakage Current	V_{GS} = ±20V			±100	nA
On Characteristics						
$V_{GS(th)}$	Gate to Source Threshold Voltage	V_{GS} = V_{DS}, I_D = 250μA	1.2	1.7	2.5	V
$\frac{\Delta V_{GS(th)}}{\Delta T_J}$	Gate to Source Threshold Voltage Temperature Coefficient	I_D = 250μA, referenced to 25°C		-6.5		mV/°C
$r_{DS(on)}$	Drain to Source On Resistance	V_{GS} = 10V, I_D = 35A		8.5	11.0	mΩ
		V_{GS} = 4.5V, I_D = 35A		11.0	14.0	
		V_{GS} = 10V, I_D = 35A, T_J = 175°C		12.1	18.0	
Dynamic Characteristics						
C_{iss}	Input Capacitance	V_{DS} = 13V, V_{GS} = 0V, f = 1MHz		920	1220	pF
C_{oss}	Output Capacitance			230	310	pF
C_{rss}	Reverse Transfer Capacitance			160	240	pF
R_g	Gate Resistance	f = 1MHz		1.4		Ω
Switching Characteristics						
$t_{d(on)}$	Turn-On Delay Time	V_{DD} = 13V, I_D = 35A, V_{GS} = 10V, R_{GS} = 9Ω		7	14	ns
t_r	Rise Time			9	18	ns
$t_{d(off)}$	Turn-Off Delay Time			22	36	ns
t_f	Fall Time			14	25	ns
Q_g	Total Gate Charge	V_{GS} = 0V to 10V, V_{DD} = 13V, I_D = 35A, I_g = 1.0mA		18	25	nC
Q_g	Total Gate Charge	V_{GS} = 0V to 5V, V_{DD} = 13V, I_D = 35A, I_g = 1.0mA		9.4	13	nC
Q_{gs}	Gate to Source Gate Charge	V_{DD} = 13V, I_D = 35A, I_g = 1.0mA		3.1		nC
Q_{gd}	Gate to Drain “Miller”Charge	V_{DD} = 13V, I_D = 35A, I_g = 1.0mA		4.0		nC
Drain-Source Diode Characteristics						
V_{SD}	Source to Drain Diode Forward Voltage	V_{GS} = 0V, I_S = 35A		0.96	1.25	V
		V_{GS} = 0V, I_S = 15A		0.86	1.2	
t_{rr}	Reverse Recovery Time	I_F = 35A, di/dt = 100A/μs		25	38	ns
Q_{rr}	Reverse Recovery Charge	I_F = 35A, di/dt = 100A/μs		17	26	nC

Notes:
1: Pulse time < 300us,Duty cycle = 2%.
2: Starting T_J = 25°C, L = 1.0mH, I_{AS} = 12A ,V_{DD} = 23V, V_{GS} = 10V.

Typical Characteristics T_J = 25°C unless otherwise noted

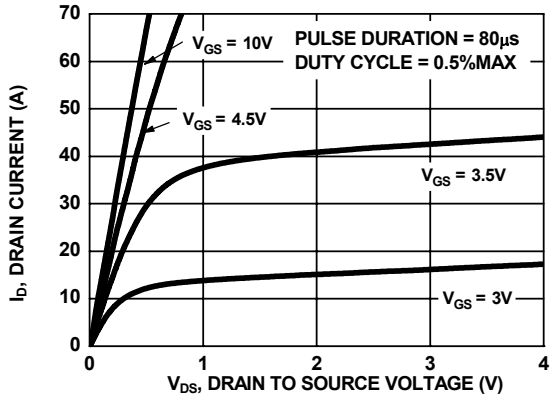

Figure 1. On Region Characteristics

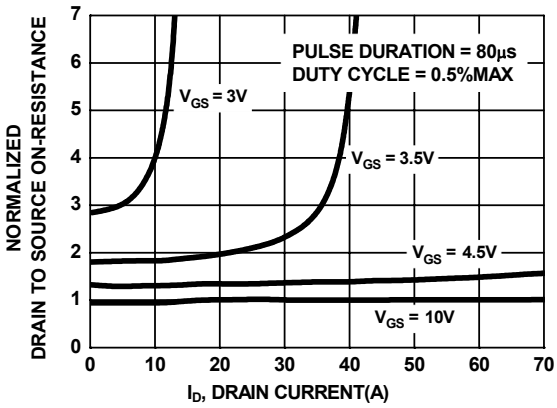

Figure 2. Normalized On-Resistance vs Drain Current and Gate Voltage

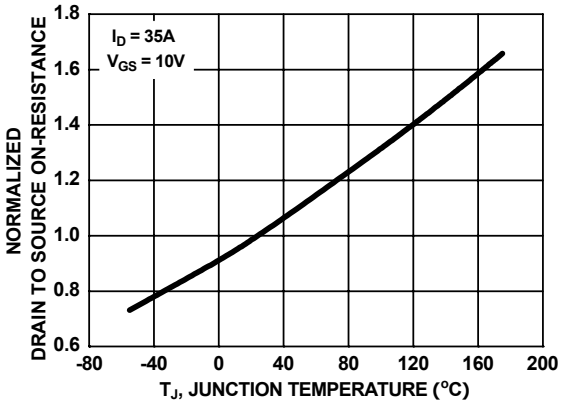

Figure 3. Normalized On Resistance vs Junction Temperature

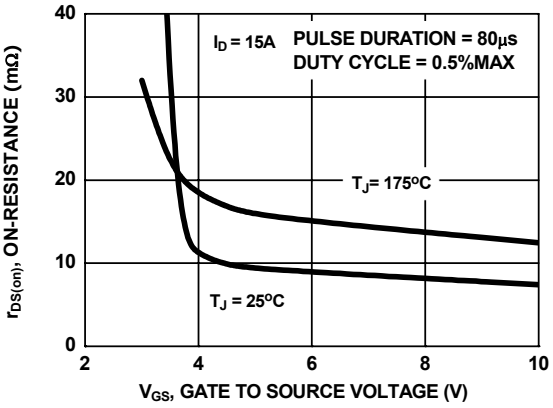

Figure 4. On-Resistance vs Gate to Source Voltage

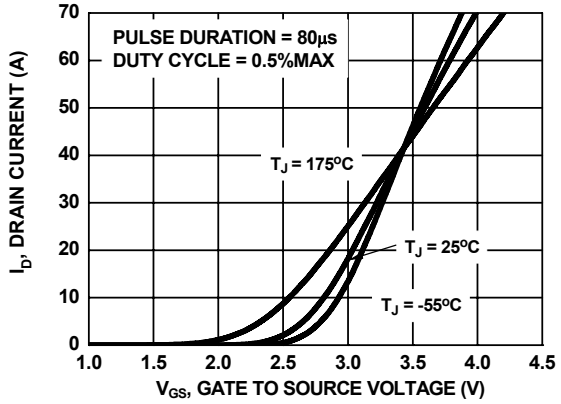

Figure 5. Transfer Characteristics

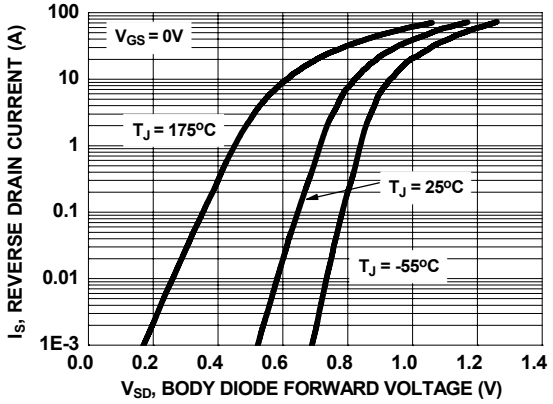

Figure 6. Source to Drain Diode Forward Voltage vs Source Current

Typical Characteristics T_J = 25°C unless otherwise noted

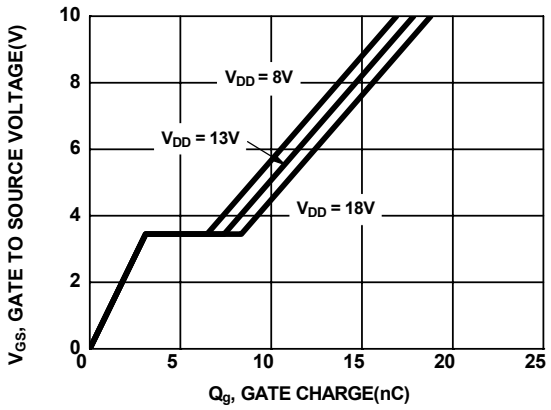

Figure 7. Gate Charge Characteristics

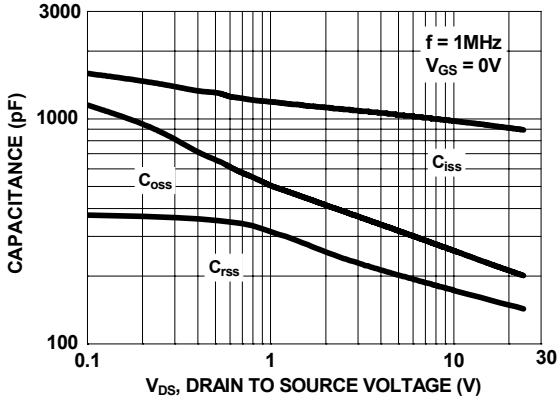

Figure 8. Capacitance vs Drain to Source Voltage

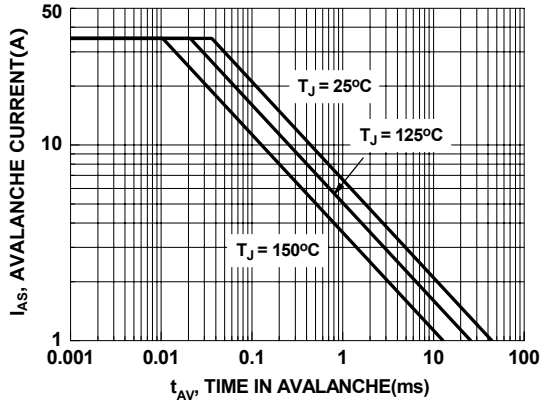

Figure 9. Unclamped Inductive Switching Capability

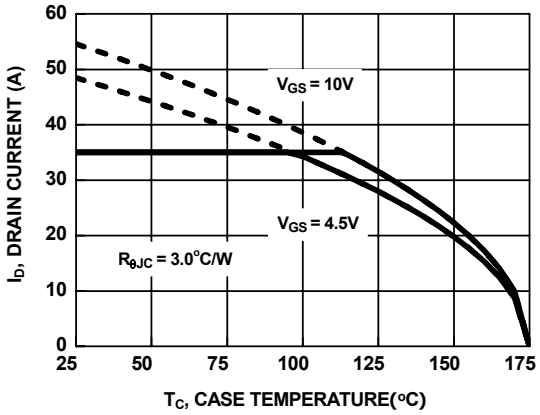

Figure 10. Maximum Continuous Drain Current vs Case Temperature

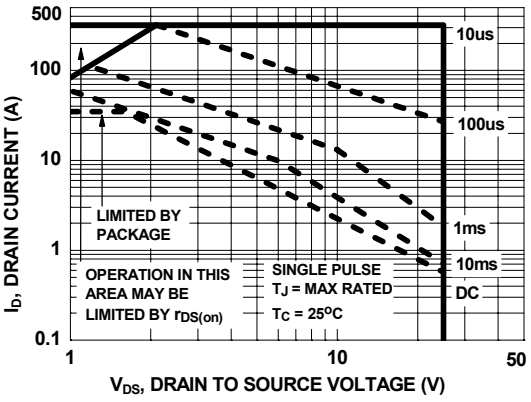

Figure 11. Forward Bias Safe Operating Area

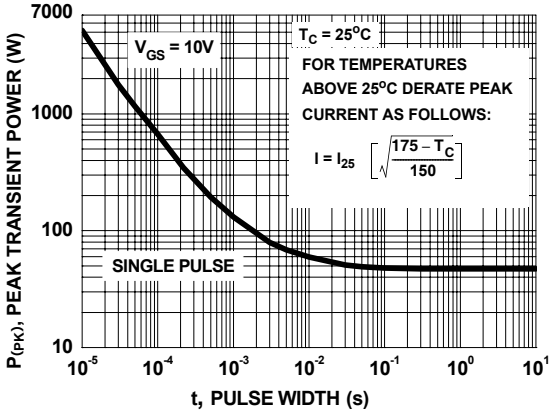

Figure 12. Single Pulse Maximum Power Dissipation

Typical Characteristics T_J = 25°C unless otherwise noted

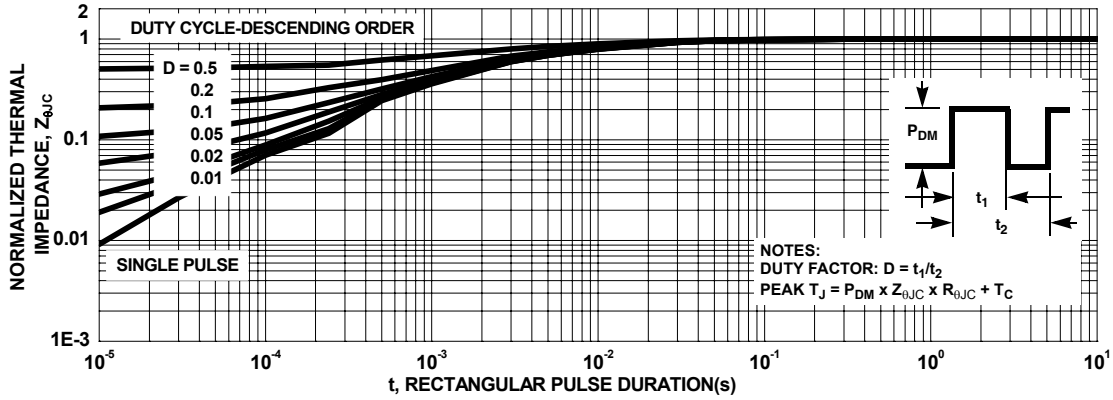

Figure 13. Transient Thermal Response Curve

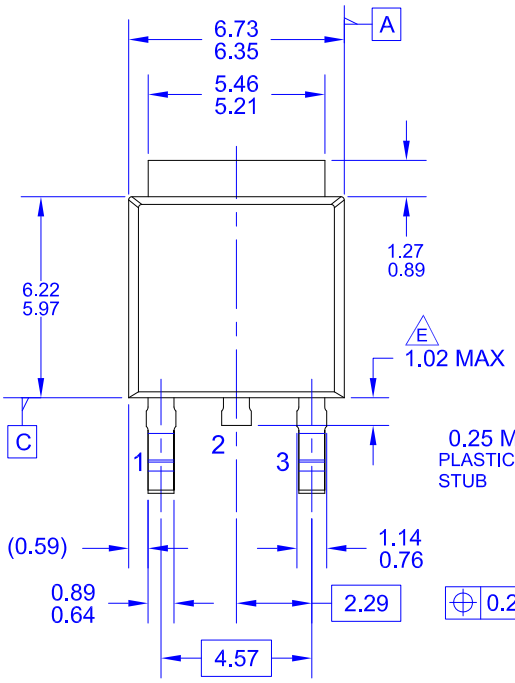

NON-DIODE PRODUCTS VERSION

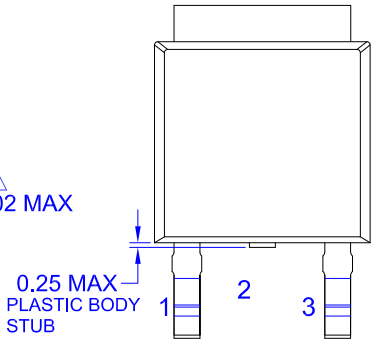

DIODE PRODUCTS VERSION

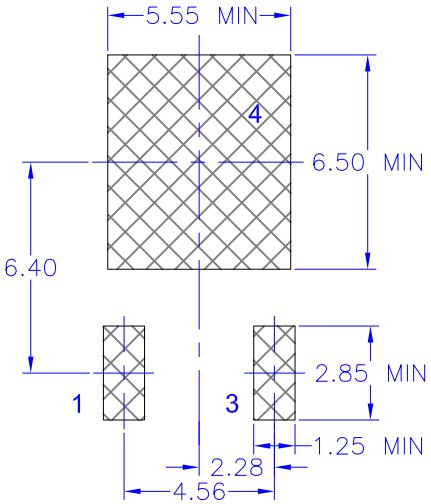

LAND PATTERN RECOMMENDATION

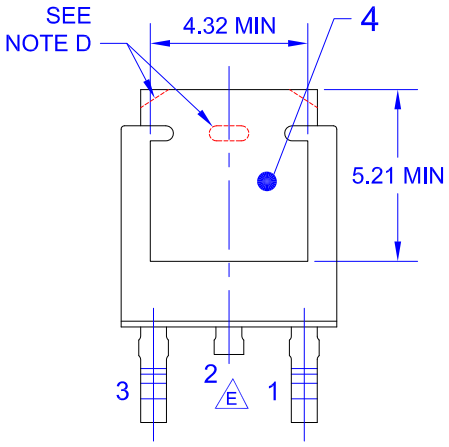

NON-DIODE PRODUCTS VERSION

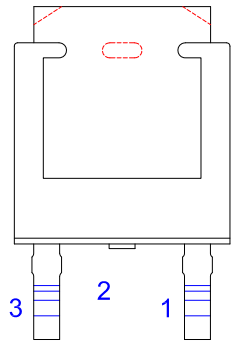

DIODE PRODUCTS VERSION

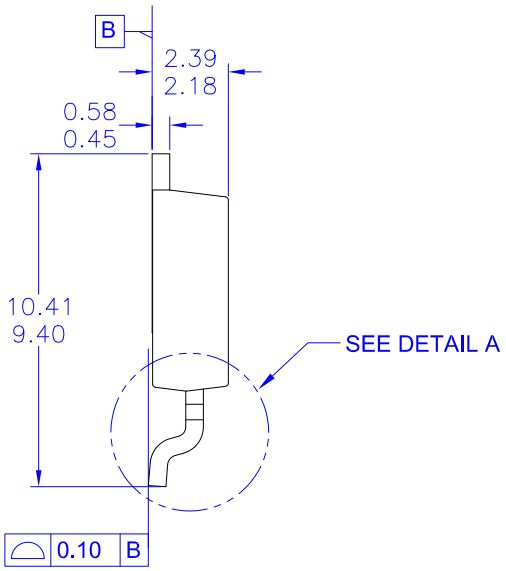

NOTES: UNLESS OTHERWISE SPECIFIED

A) THIS PACKAGE CONFORMS TO JEDEC, TO-252, ISSUE C, VARIATION AA.
B) ALL DIMENSIONS ARE IN MILLIMETERS.
C) DIMENSIONING AND TOLERANCING PER ASME Y14.5M-2009.
D) SUPPLIER DEPENDENT MOLD LOCKING HOLES OR CHAMFERED CORNERS OR EDGE PROTRUSION.
E) TRIMMED CENTER LEAD IS PRESENT ONLY FOR DIODE PRODUCTS
F) DIMENSIONS ARE EXCLUSSIVE OF BURSS, MOLD FLASH AND TIE BAR EXTRUSIONS.
G) LAND PATTERN RECOMENDATION IS BASED ON IPC7351A STD TO228P991X239-3N.
H) DRAWING NUMBER AND REVISION: MKT-TO252A03REV10

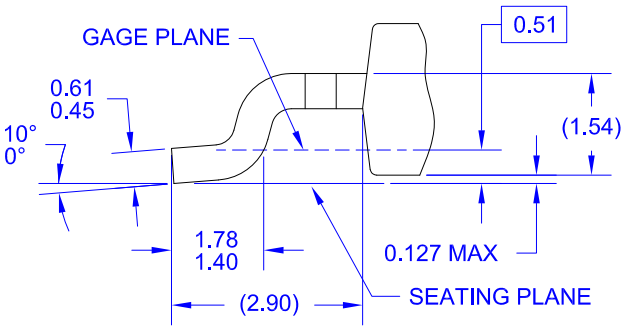

DETAIL A
(ROTATED -90°)
SCALE: 12X

FAIRCHILD

TRADEMARKS

The following includes registered and unregistered trademarks and service marks, owned by Fairchild Semiconductor and/or its global subsidiaries, and is not intended to be an exhaustive list of all such trademarks.

AccuPower™
AttitudeEngine™
Awinda®
AX-CAP®*
BitSiC™
Build it Now™
CorePLUS™
CorePOWER™
CROSSVOLT™
CTL™
Current Transfer Logic™
DEUXPEED®
Dual Cool™
EcoSPARK®
EfficientMax™
ESBC™
Fairchild®
Fairchild Semiconductor®
FACT Quiet Series™
FACT®
FAST®
FastvCore™
FETBench™
FPS™
F-PFS™
FRFET®
Global Power Resource SM
GreenBridge™
Green FPS™
Green FPS™ e-Series™
G*max*™
GTO™
IntelliMAX™
ISOPLANAR™
Making Small Speakers Sound Louder and Better™
MegaBuck™
MICROCOUPLER™
MicroFET™
MicroPak™
MicroPak2™
MillerDrive™
MotionMax™
MotionGrid®
MTi®
MTx®
MVN®
mWSaver®
OptoHiT™
OPTOLOGIC®
OPTOPLANAR®
®
Power Supply WebDesigner™
PowerTrench®
PowerXS™
Programmable Active Droop™
QFET®
QS™
Quiet Series™
RapidConfigure™
™
Saving our world, 1mW/W/kW at a time™
SignalWise™
SmartMax™
SMART START™
Solutions for Your Success™
SPM®
STEALTH™
SuperFET®
SuperSOT™-3
SuperSOT™-6
SuperSOT™-8
SupreMOS®
SyncFET™
Sync-Lock™
SYSTEM GENERAL®*
TinyBoost®
TinyBuck®
TinyCalc™
TinyLogic®
TINYOPTO™
TinyPower™
TinyPWM™
TinyWire™
TranSiC™
TriFault Detect™
TRUECURRENT®*
µSerDes™
SerDes™
UHC®
Ultra FRFET™
UniFET™
VCX™
VisualMax™
VoltagePlus™
XS™
Xsens™
仙童™

* Trademarks of System General Corporation, used under license by Fairchild Semiconductor.

DISCLAIMER

FAIRCHILD SEMICONDUCTOR RESERVES THE RIGHT TO MAKE CHANGES WITHOUT FURTHER NOTICE TO ANY PRODUCTS HEREIN TO IMPROVE RELIABILITY, FUNCTION, OR DESIGN. TO OBTAIN THE LATEST, MOST UP-TO-DATE DATASHEET AND PRODUCT INFORMATION, VISIT OUR WEBSITE AT HTTP://WWW.FAIRCHILDSEMI.COM. FAIRCHILD DOES NOT ASSUME ANY LIABILITY ARISING OUT OF THE APPLICATION OR USE OF ANY PRODUCT OR CIRCUIT DESCRIBED HEREIN; NEITHER DOES IT CONVEY ANY LICENSE UNDER ITS PATENT RIGHTS, NOR THE RIGHTS OF OTHERS. THESE SPECIFICATIONS DO NOT EXPAND THE TERMS OF FAIRCHILD'S WORLDWIDE TERMS AND CONDITIONS, SPECIFICALLY THE WARRANTY THEREIN, WHICH COVERS THESE PRODUCTS.

AUTHORIZED USE

Unless otherwise specified in this data sheet, this product is a standard commercial product and is not intended for use in applications that require extraordinary levels of quality and reliability. This product may not be used in the following applications, unless specifically approved in writing by a Fairchild officer: (1) automotive or other transportation, (2) military/aerospace, (3) any safety critical application – including life critical medical equipment – where the failure of the Fairchild product reasonably would be expected to result in personal injury, death or property damage. Customer's use of this product is subject to agreement of this Authorized Use policy. In the event of an unauthorized use of Fairchild's product, Fairchild accepts no liability in the event of product failure. In other respects, this product shall be subject to Fairchild's Worldwide Terms and Conditions of Sale, unless a separate agreement has been signed by both Parties.

ANTI-COUNTERFEITING POLICY

Fairchild Semiconductor Corporation's Anti-Counterfeiting Policy. Fairchild's Anti-Counterfeiting Policy is also stated on our external website, www.fairchildsemi.com, under Terms of Use

Counterfeiting of semiconductor parts is a growing problem in the industry. All manufacturers of semiconductor products are experiencing counterfeiting of their parts. Customers who inadvertently purchase counterfeit parts experience many problems such as loss of brand reputation, substandard performance, failed applications, and increased cost of production and manufacturing delays. Fairchild is taking strong measures to protect ourselves and our customers from the proliferation of counterfeit parts. Fairchild strongly encourages customers to purchase Fairchild parts either directly from Fairchild or from Authorized Fairchild Distributors who are listed by country on our web page cited above. Products customers buy either from Fairchild directly or from Authorized Fairchild Distributors are genuine parts, have full traceability, meet Fairchild's quality standards for handling and storage and provide access to Fairchild's full range of up-to-date technical and product information. Fairchild and our Authorized Distributors will stand behind all warranties and will appropriately address any warranty issues that may arise. Fairchild will not provide any warranty coverage or other assistance for parts bought from Unauthorized Sources. Fairchild is committed to combat this global problem and encourage our customers to do their part in stopping this practice by buying direct or from authorized distributors.

PRODUCT STATUS DEFINITIONS

Definition of Terms

Datasheet Identification	Product Status	Definition
Advance Information	Formative / In Design	Datasheet contains the design specifications for product development. Specifications may change in any manner without notice.
Preliminary	First Production	Datasheet contains preliminary data; supplementary data will be published at a later date. Fairchild Semiconductor reserves the right to make changes at any time without notice to improve design.
No Identification Needed	Full Production	Datasheet contains final specifications. Fairchild Semiconductor reserves the right to make changes at any time without notice to improve the design.
Obsolete	Not In Production	Datasheet contains specifications on a product that is discontinued by Fairchild Semiconductor. The datasheet is for reference information only.

Rev. I75

ENTEGRECİ

Bu belge www.entegreci.com üzerinden sunulmaktadır.

Elektronik komponent tedarikinde Entegreci

Entegreci, Eskişehir merkezli, Türkiye geneline satış yapan bir elektronik komponent mağazasıdır. Entegreler (IC), mikrodenetleyiciler, transistörler, diyotlar, pasif elemanlar, konnektörler, modüller ve geliştirme kartları tek adetten seri üretim adetlerine kadar satılır. Ürün sayfalarında güncel stok durumunu, fiyatı ve datasheet bağlantısını bulabilirsiniz.

Parça koduyla arama

Üretici parça numarasını yazın; stok ve fiyatı hemen görün.

www.entegreci.com

Ürün kategorileri

Entegreden kapasitöre tüm elektronik komponent kategorileri.

Kategorilere göz atın

Üreticiler

Aradığınız üreticinin ürünlerini tek sayfada inceleyin.

Üreticileri görün

Toplu alım ve teklif

Listede olmayan ya da yüksek adetli parçalar için teklif isteyin.

Teklif isteyin

www.entegreci.com | **destek@entegreci.com** | **0850 305 90 34**

Entegreci is an online electronic components store based in Türkiye. Search by manufacturer part number to see stock, prices and datasheets for integrated circuits, microcontrollers, transistors, passive components and connectors, or request a quote for parts that are not listed.

Bu sayfa Entegreci tarafından eklenmiştir. Belgenin önceki sayfaları asıl yayıncısına aittir ve içeriği değiştirilmemiştir; en güncel sürüm için belgenin yayıncısına başvurun.