

Is Now Part of



ON Semiconductor®

To learn more about ON Semiconductor, please visit our website at
www.onsemi.com

Please note: As part of the Fairchild Semiconductor integration, some of the Fairchild orderable part numbers will need to change in order to meet ON Semiconductor's system requirements. Since the ON Semiconductor product management systems do not have the ability to manage part nomenclature that utilizes an underscore (_), the underscore (_) in the Fairchild part numbers will be changed to a dash (-). This document may contain device numbers with an underscore (_). Please check the ON Semiconductor website to verify the updated device numbers. The most current and up-to-date ordering information can be found at www.onsemi.com. Please email any questions regarding the system integration to Fairchild_questions@onsemi.com.

ON Semiconductor and the ON Semiconductor logo are trademarks of Semiconductor Components Industries, LLC dba ON Semiconductor or its subsidiaries in the United States and/or other countries. ON Semiconductor owns the rights to a number of patents, trademarks, copyrights, trade secrets, and other intellectual property. A listing of ON Semiconductor's product/patent coverage may be accessed at www.onsemi.com/site/pdf/Patent-Marking.pdf. ON Semiconductor reserves the right to make changes without further notice to any products herein. ON Semiconductor makes no warranty, representation or guarantee regarding the suitability of its products for any particular purpose, nor does ON Semiconductor assume any liability arising out of the application or use of any product or circuit, and specifically disclaims any and all liability, including without limitation special, consequential or incidental damages. Buyer is responsible for its products and applications using ON Semiconductor products, including compliance with all laws, regulations and safety requirements or standards, regardless of any support or applications information provided by ON Semiconductor. "Typical" parameters which may be provided in ON Semiconductor data sheets and/or specifications can and do vary in different applications and actual performance may vary over time. All operating parameters, including "Typicals" must be validated for each customer application by customer's technical experts. ON Semiconductor does not convey any license under its patent rights nor the rights of others. ON Semiconductor products are not designed, intended, or authorized for use as a critical component in life support systems or any FDA Class 3 medical devices or medical devices with a same or similar classification in a foreign jurisdiction or any devices intended for implantation in the human body. Should Buyer purchase or use ON Semiconductor products for any such unintended or unauthorized application, Buyer shall indemnify and hold ON Semiconductor and its officers, employees, subsidiaries, affiliates, and distributors harmless against all claims, costs, damages, and expenses, and reasonable attorney fees arising out of, directly or indirectly, any claim of personal injury or death associated with such unintended or unauthorized use, even if such claim alleges that ON Semiconductor was negligent regarding the design or manufacture of the part. ON Semiconductor is an Equal Opportunity/Affirmative Action Employer. This literature is subject to all applicable copyright laws and is not for resale in any manner.

March 2015

FDD4685
40V P-Channel PowerTrench® MOSFET
–40V, –32A, 27mΩ

Features

- Max $r_{DS(on)}$ = 27mΩ at V_{GS} = –10V, I_D = –8.4A
- Max $r_{DS(on)}$ = 35mΩ at V_{GS} = –4.5V, I_D = –7A
- High performance trench technology for extremely low $r_{DS(on)}$
- RoHS Compliant

General Description

This P-Channel MOSFET has been produced using Fairchild Semiconductor's proprietary PowerTrench® technology to deliver low $r_{DS(on)}$ and good switching characteristic offering superior performance in application.

Application

- Inverter
- Power Supplies

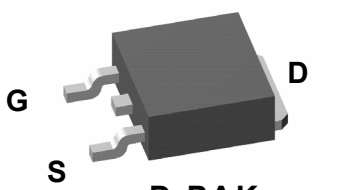

D-PAK
(TO-252)

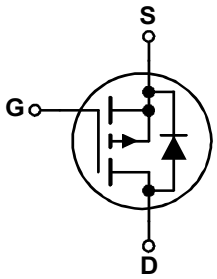

MOSFET Maximum Ratings T_C = 25°C unless otherwise noted

Symbol	Parameter			Ratings	Units
V_{DS}	Drain to Source Voltage			–40	V
V_{GS}	Gate to Source Voltage			±20	V
I_D	Drain Current -Continuous(Package Limited)	T_C= 25°C		–32	A
	-Continuous(Silicon Limited)	T_C= 25°C	(Note 1)	–40	
	-Continuous	T_A= 25°C	(Note 1a)	–8.4	
	-Pulsed			–100	
E_{AS}	Drain-Source Avalanche Energy		(Note 3)	121	mJ
P_D	Power Dissipation	T_C= 25°C		69	W
	Power Dissipation		(Note 1a)	3	
T_J, T_{STG}	Operating and Storage Junction Temperature Range			–55 to +150	°C

Thermal Characteristics

$R_{\theta JC}$	Thermal Resistance, Junction to Case	1.8	°C/W
$R_{\theta JA}$	Thermal Resistance, Junction to Ambient (Note 1a)	40	

Package Marking and Ordering Information

Device Marking	Device	Package	Reel Size	Tape Width	Quantity
FDD4685	FDD4685	D-PAK(TO-252)	13”	16mm	2500 units

©2006 Fairchild Semiconductor Corporation

Electrical Characteristics T_J = 25°C unless otherwise noted

Symbol	Parameter	Test Conditions	Min	Typ	Max	Units
Off Characteristics						
BV_{DSS}	Drain to Source Breakdown Voltage	I_D = –250μA, V_{GS} = 0V	–40			V
$\frac{\Delta BV_{DSS}}{\Delta T_J}$	Breakdown Voltage Temperature Coefficient	I_D = –250μA, referenced to 25°C		–33		mV/°C
I_{DSS}	Zero Gate Voltage Drain Current	V_{DS} = –32V, V_{GS} = 0V			–1	μA
I_{GSS}	Gate to Source Leakage Current	V_{GS} = ±20V, V_{GS} = 0V			±100	nA
On Characteristics (Note 2)						
$V_{GS(th)}$	Gate to Source Threshold Voltage	V_{GS} = V_{DS}, I_D = –250μA	–1	–1.6	–3	V
$\frac{\Delta V_{GS(th)}}{\Delta T_J}$	Gate to Source Threshold Voltage Temperature Coefficient	I_D = –250μA, referenced to 25°C		4.9		mV/°C
$r_{DS(on)}$	Static Drain to Source On Resistance	V_{GS} = –10V, I_D = –8.4A		23	27	mΩ
		V_{GS} = –4.5V, I_D = –7A		30	35	
		V_{GS} = –10V, I_D = –8.4A, T_J=125°C		33	42	
g_{FS}	Forward Transconductance	V_{DS} = –5V, I_D = –8.4A		23		S
Dynamic Characteristics						
C_{iss}	Input Capacitance	V_{DS} = –20V, V_{GS} = 0V, f = 1MHz		1790	2380	pF
C_{oss}	Output Capacitance			260	345	pF
C_{rss}	Reverse Transfer Capacitance			140	205	pF
R_g	Gate Resistance	f = 1MHz		4		Ω
Switching Characteristics						
$t_{d(on)}$	Turn-On Delay Time	V_{DD} = –20V, I_D = –8.4A, V_{GS} = –10V, R_{GEN} = 6Ω		8	16	ns
t_r	Rise Time			15	27	ns
$t_{d(off)}$	Turn-Off Delay Time			34	55	ns
t_f	Fall Time			14	26	ns
$Q_{g(TOT)}$	Total Gate Charge	V_{DD} =–20V, I_D = –8.4A, V_{GS} = –5V		19	27	nC
Q_{gs}	Gate to Source Gate Charge			5.6		nC
Q_{gd}	Gate to Drain “Miller” Charge			6.1		nC
Drain-Source Diode Characteristics						
V_{SD}	Source to Drain Diode Forward Voltage	V_{GS} = 0V, I_S = –8.4A (Note 2)		–0.85	–1.2	V
t_{rr}	Reverse Recovery Time	I_F = –8.4A, di/dt = 100A/μs		30	45	ns
Q_{rr}	Reverse Recovery Charge			31	47	nC

Notes:

1: $R_{\theta JA}$ is the sum of the junction-to-case and case-to- ambient thermal resistance where the case thermal reference is defined as the solder mounting surface of the drain pins. $R_{\theta JC}$ is guaranteed by design while $R_{\theta JA}$ is determined by the user’s board design.

a. 40°C/W when mounted on a 1 in^2 pad of 2 oz copper

b. 96°C/W when mounted on a minimum pad.

2: Pulse Test: Pulse Width < 300μs, Duty cycle < 2.0%.

3: Starting T_J = 25°C, L = 3mH, I_{AS} = 9A, V_{DD} = 40V, V_{GS} = 10V.

Typical Characteristics T_J = 25°C unless otherwise noted

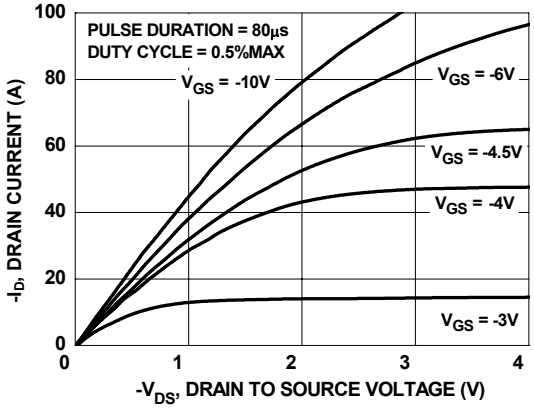

Figure 1. On Region Characteristics

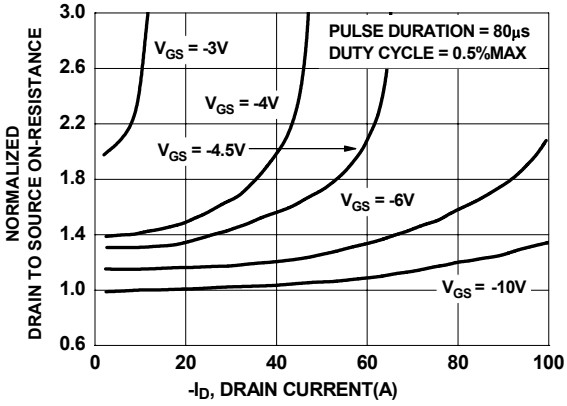

Figure 2. Normalized On-Resistance vs Drain Current and Gate Voltage

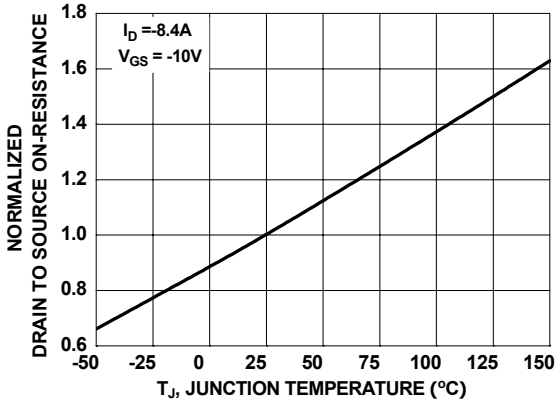

Figure 3. Normalized On Resistance vs Junction Temperature

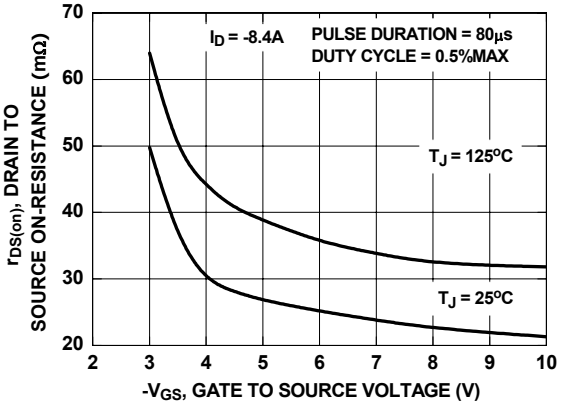

Figure 4. On-Resistance vs Gate to Source Voltage

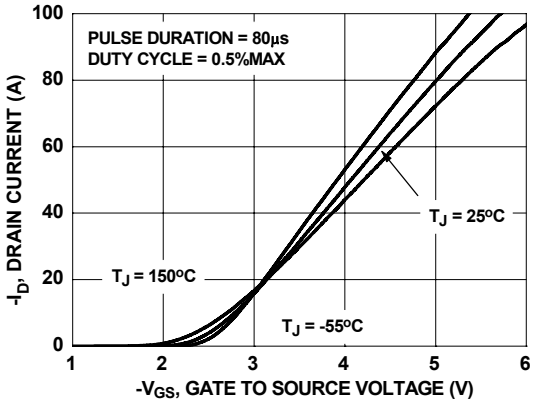

Figure 5. Transfer Characteristics

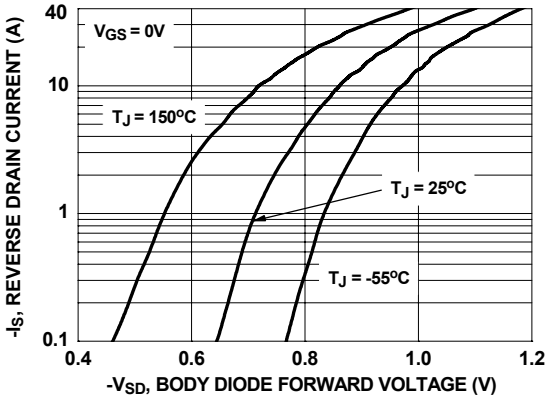

Figure 6. Source to Drain Diode Forward Voltage vs Source Current

Typical Characteristics T_J = 25°C unless otherwise noted

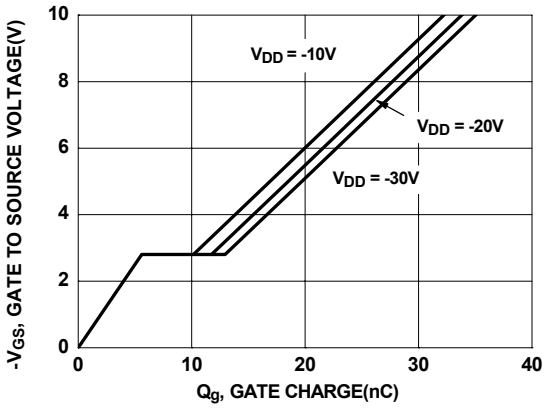

Figure 7. Gate Charge Characteristics

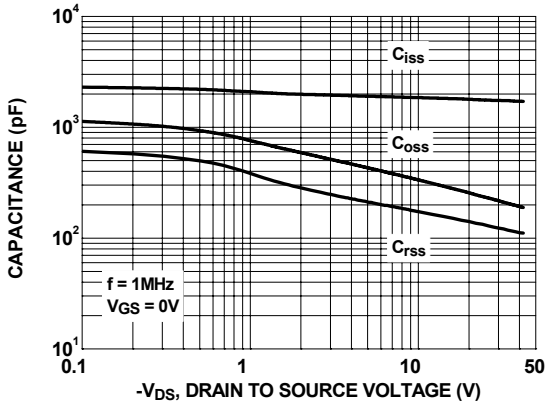

Figure 8. Capacitance vs Drain to Source Voltage

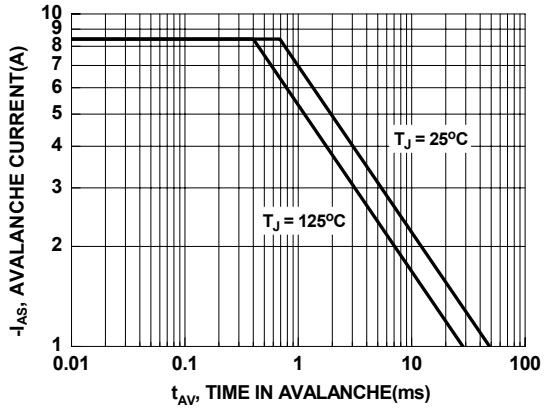

Figure 9. Unclamped Inductive Switching Capability

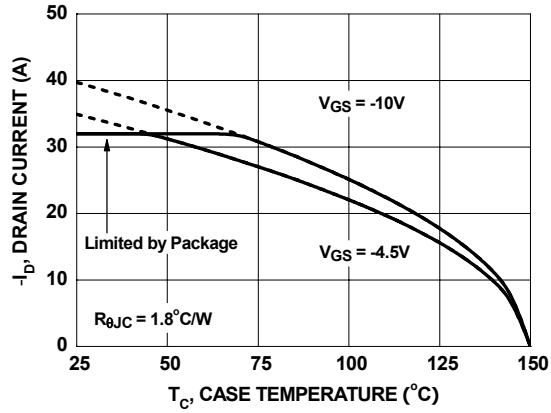

Figure 10. Maximum Continuous Drain Current vs Case Temperature

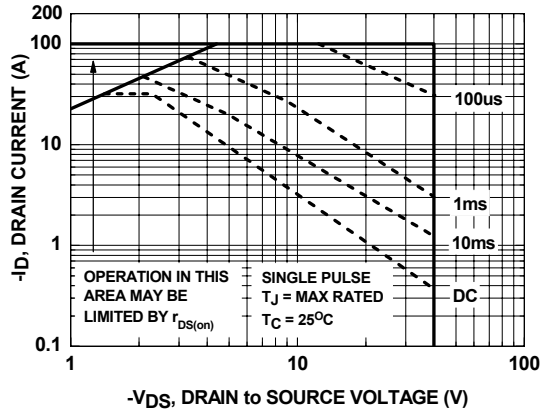

Figure 11. Forward Bias Safe Operating Area

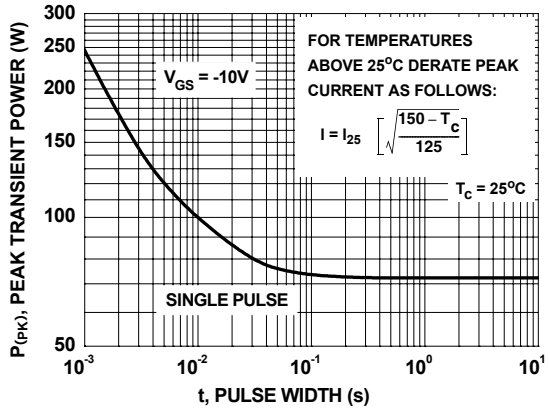

Figure 12. Single Pulse Maximum Power Dissipation

Typical Characteristics T_J = 25°C unless otherwise noted

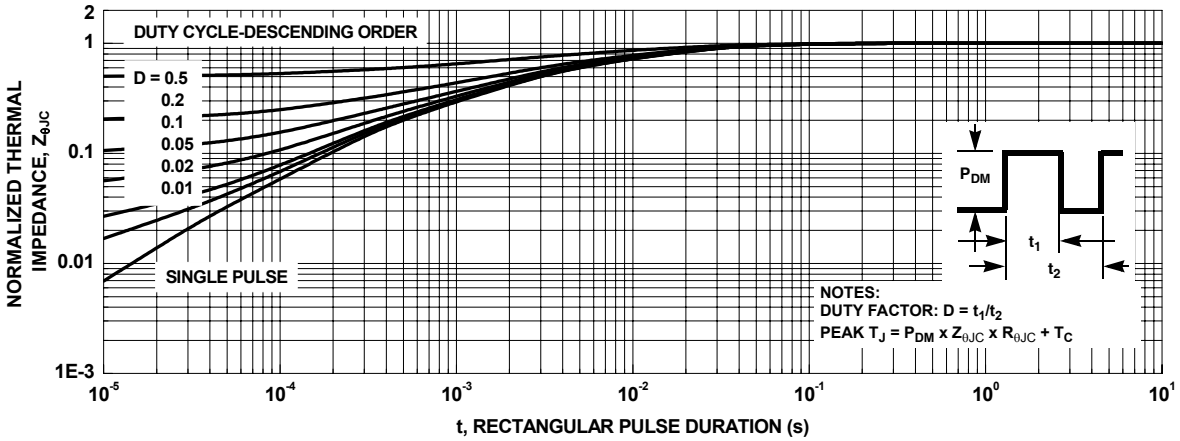

Figure 13. Transient Thermal Response Curve

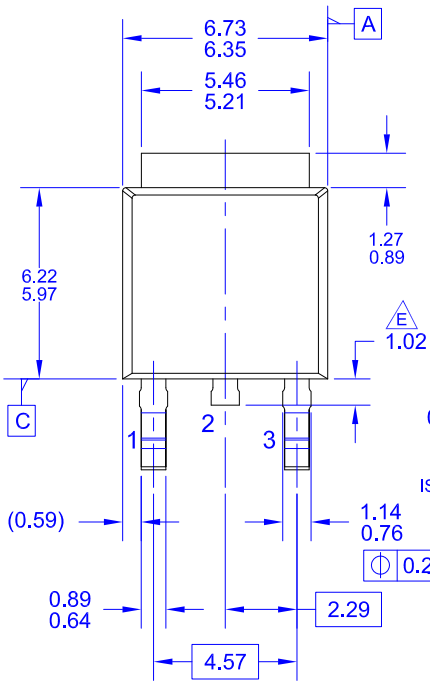

NON-DIODE PRODUCTS VERSION

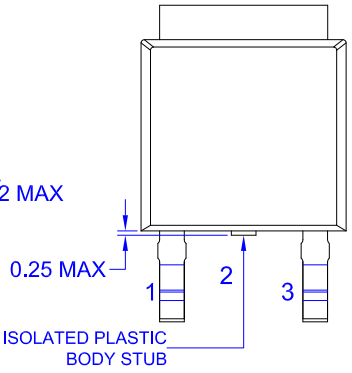

DIODE PRODUCTS VERSION

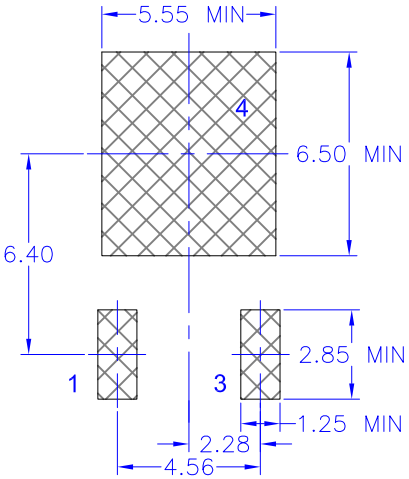

LAND PATTERN RECOMMENDATION

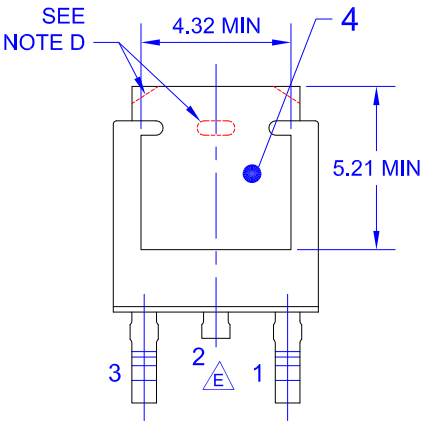

NON-DIODE PRODUCTS VERSION

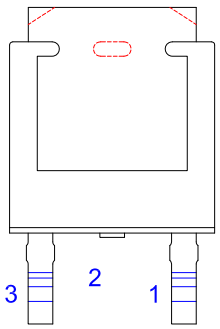

DIODE PRODUCTS VERSION

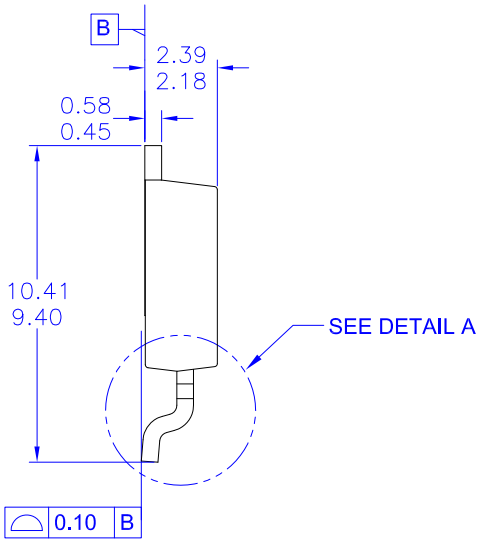

NOTES: UNLESS OTHERWISE SPECIFIED

A) THIS PACKAGE CONFORMS TO JEDEC, TO-252, ISSUE C, VARIATION AA.
B) ALL DIMENSIONS ARE IN MILLIMETERS.
C) DIMENSIONING AND TOLERANCING PER ASME Y14.5M-2009.
D) SUPPLIER DEPENDENT MOLD LOCKING HOLES OR CHAMFERED CORNERS OR EDGE PROTRUSION.
E) TRIMMED METAL CENTER LEAD IS PRESENT ON FOR NON-DIODE PRODUCTS
F) DIMENSIONS ARE EXCLUSIVE OF BURS, MOLD FLASH AND TIE BAR EXTRUSIONS.
G) LAND PATTERN RECOMMENDATION IS BASED ON IPC7351A STD TO228P991X239-3N.
H) DRAWING NUMBER AND REVISION: MKT-TO252A03REV11

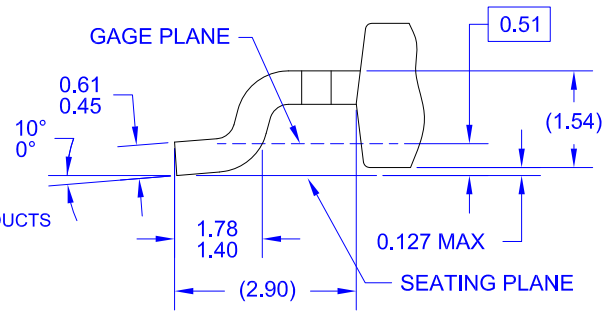

DETAIL A
(ROTATED -90°)
SCALE: 12X

FAIRCHILD

ON Semiconductor and ON are trademarks of Semiconductor Components Industries, LLC dba ON Semiconductor or its subsidiaries in the United States and/or other countries. ON Semiconductor owns the rights to a number of patents, trademarks, copyrights, trade secrets, and other intellectual property. A listing of ON Semiconductor's product/patent coverage may be accessed at www.onsemi.com/site/pdf/Patent−Marking.pdf. ON Semiconductor reserves the right to make changes without further notice to any products herein. ON Semiconductor makes no warranty, representation or guarantee regarding the suitability of its products for any particular purpose, nor does ON Semiconductor assume any liability arising out of the application or use of any product or circuit, and specifically disclaims any and all liability, including without limitation special, consequential or incidental damages. Buyer is responsible for its products and applications using ON Semiconductor products, including compliance with all laws, regulations and safety requirements or standards, regardless of any support or applications information provided by ON Semiconductor. "Typical" parameters which may be provided in ON Semiconductor data sheets and/or specifications can and do vary in different applications and actual performance may vary over time. All operating parameters, including "Typicals" must be validated for each customer application by customer's technical experts. ON Semiconductor does not convey any license under its patent rights nor the rights of others. ON Semiconductor products are not designed, intended, or authorized for use as a critical component in life support systems or any FDA Class 3 medical devices or medical devices with a same or similar classification in a foreign jurisdiction or any devices intended for implantation in the human body. Should Buyer purchase or use ON Semiconductor products for any such unintended or unauthorized application, Buyer shall indemnify and hold ON Semiconductor and its officers, employees, subsidiaries, affiliates, and distributors harmless against all claims, costs, damages, and expenses, and reasonable attorney fees arising out of, directly or indirectly, any claim of personal injury or death associated with such unintended or unauthorized use, even if such claim alleges that ON Semiconductor was negligent regarding the design or manufacture of the part. ON Semiconductor is an Equal Opportunity/Affirmative Action Employer. This literature is subject to all applicable copyright laws and is not for resale in any manner.

PUBLICATION ORDERING INFORMATION

LITERATURE FULFILLMENT:
Literature Distribution Center for ON Semiconductor
19521 E. 32nd Pkwy, Aurora, Colorado 80011 USA
Phone: 303−675−2175 or 800−344−3860 Toll Free USA/Canada
Fax: 303−675−2176 or 800−344−3867 Toll Free USA/Canada
Email: orderlit@onsemi.com

N. American Technical Support: 800−282−9855 Toll Free USA/Canada
Europe, Middle East and Africa Technical Support:
Phone: 421 33 790 2910
Japan Customer Focus Center
Phone: 81−3−5817−1050

ON Semiconductor Website: **www.onsemi.com**

Order Literature: http://www.onsemi.com/orderlit

For additional information, please contact your local Sales Representative

ENTEGRECİ

Bu belge www.entegreci.com üzerinden sunulmaktadır.

Elektronik komponent tedarikinde Entegreci

Entegreci, Eskişehir merkezli, Türkiye geneline satış yapan bir elektronik komponent mağazasıdır. Entegreler (IC), mikrodenetleyiciler, transistörler, diyotlar, pasif elemanlar, konnektörler, modüller ve geliştirme kartları tek adetten seri üretim adetlerine kadar satılır. Ürün sayfalarında güncel stok durumunu, fiyatı ve datasheet bağlantısını bulabilirsiniz.

Parça koduyla arama

Üretici parça numarasını yazın; stok ve fiyatı hemen görün.

www.entegreci.com

Ürün kategorileri

Entegreden kapasitöre tüm elektronik komponent kategorileri.

Kategorilere göz atın

Üreticiler

Aradığınız üreticinin ürünlerini tek sayfada inceleyin.

Üreticileri görün

Toplu alım ve teklif

Listede olmayan ya da yüksek adetli parçalar için teklif isteyin.

Teklif isteyin

www.entegreci.com | **destek@entegreci.com** | **0850 305 90 34**

Entegreci is an online electronic components store based in Türkiye. Search by manufacturer part number to see stock, prices and datasheets for integrated circuits, microcontrollers, transistors, passive components and connectors, or request a quote for parts that are not listed.

Bu sayfa Entegreci tarafından eklenmiştir. Belgenin önceki sayfaları asıl yayıncısına aittir ve içeriği değiştirilmemiştir; en güncel sürüm için belgenin yayıncısına başvurun.