MOSFET – P-Channel, POWERTRENCH®

-40 V, -14 A, 44 mΩ

FDD4243, FDD4243-G

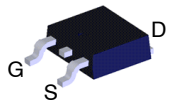

DPAK3 (TO−252 3 LD)
CASE 369AS

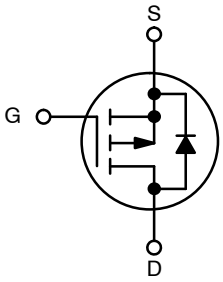

P−Channel MOSFET

General Description

This P−Channel MOSFET has been produced using **onsemi**'s proprietary POWERTRENCH technology to deliver low $R_{DS(on)}$ and optimized Bvdss capability to offer superior performance benefit in the applications.

Features

- Max $R_{DS(on)}$ = 44 mΩ at V_{GS} = −10 V, I_D = −6.7 A
- Max $R_{DS(on)}$ = 64 mΩ at V_{GS} = −4.5 V, I_D = −5.5 A
- High Performance Trench Technology for Extremely Low $r_{DS(on)}$
- Pb−Free, Halide Free and RoHS Compliant

ABSOLUTE MAXIMUM RATINGS

T_C = 25°C unless otherwise noted.

Symbol	Parameter		Ratings	Unit
V_{DS}	Drain to Source Voltage		−40	V
V_{GS}	Gate to Source Voltage		±20	V
I_D	Drain Current – Continuous (Package Limited) – Continuous (Silicon Limited) (Note 1) – Continuous (Note 1a) – Pulsed	 T_C = 25°C T_C = 25°C T_A = 25°C 	 −14 −24 −6.7 −60	A
E_{AS}	Single Pulse Avalanche Energy (Note 3)		84	
P_D	Power dissipation – T_C = 25°C – (Note 1a)		 42 3	W
T_J, T_{STG}	Operating and Storage Junction Temperature Range		−55 to +150	°C

Stresses exceeding those listed in the Maximum Ratings table may damage the device. If any of these limits are exceeded, device functionality should not be assumed, damage may occur and reliability may be affected.

THERMAL CHARACTERISTICS

Symbol	Parameter	Ratings	Unit
$R_{\theta JC}$	Thermal Resistance, Junction to Case	3.0	°C/W
$R_{\theta JA}$	Thermal Resistance, Junction to Ambient (Note 1a)	40	°C/W

MARKING DIAGRAM

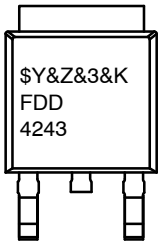

FDD4243	= Specific Device Code
$Y	= **onsemi** Logo
&Z	= Assembly Plant Code
&3	= 3−Digit Date Code
&K	= 2−Digits Lot Run Traceability Code

ORDERING INFORMATION

Device	Package	Shipping†
FDD4243	DPAK3 (TO−252 3LD) (Pb−Free/ Halide Free)	2500 / Tape & Reel
FDD4243−G	DPAK3 (TO−252 3LD) (Pb−Free/ Halide Free)	2500 / Tape & Reel

†For information on tape and reel specifications, including part orientation and tape sizes, please refer to our Tape and Reel Packaging Specification Brochure, BRD8011/D.

© Semiconductor Components Industries, LLC, 2007

ELECTRICAL CHARACTERISTICS T_J = 25°C unless otherwise noted.

Symbol	Parameter	Test Conditions	Min	Typ	Max	Unit
OFF CHARACTERISTICS						
BV_{DSS}	Drain to Source Breakdown Voltage	I_D = −250 μA, V_{GS} = 0 V	−40	–	–	V
$\frac{\Delta BV_{DSS}}{\Delta T_J}$	Breakdown Voltage Temperature Coefficient	I_D = −250 μA, Referenced to 25°C	–	−32	–	mV/°C
I_{DSS}	Zero Gate Voltage Drain Current	V_{DS} = −32 V, V_{GS} = 0 V V_{DS} = −32 V, V_{GS} = 0 V, T_J = 125°C	–	–	−1 −100	μA
I_{GSS}	Gate to Source Leakage Current	V_{GS} = ±20 V, V_{DS} = 0 V	–	–	±100	nA
ON CHARACTERISTICS (Note 2)						
$V_{GS(th)}$	Gate to Source Threshold Voltage	V_{DS} = V_{GS}, I_D = −250 μA	−1.4	−1.6	−3.0	V
$\frac{\Delta V_{GS(th)}}{\Delta T_J}$	Gate to Source Threshold Voltage Temperature Coefficient	I_D = −250 μA, Referenced to 25°C	–	4.7	–	mV/°C
$R_{DS(on)}$	Drain to Source On Resistance	I_D = −6.7 A, V_{GS} = −10 V,	–	36	44	mΩ
		I_D = −5.5 A, V_{GS} = −4.5 V	–	48	64	
		I_D = −6.7 A, V_{GS} = −10 V, T_J = 125°C	–	53	69	
g_{FS}	Forward Transconductance	V_{DS} = −5 V, I_D = −6.7 A	–	16	–	S
DYNAMIC CHARACTERISTICS						
C_{iss}	Input Capacitance	V_{DS} = −20 V, V_{GS} = 0 V, f = 1.0 MHz	–	1165	1550	pF
C_{oss}	Output Capacitance		–	165	220	
C_{rss}	Reverse Transfer Capacitance		–	90	135	
R_g	Gate Resistance	f = 1 MHz	–	4	–	Ω
SWITCHING CHARACTERISTICS (Note 2)						
$t_{d(on)}$	Turn−On Delay Time	V_{DD} = −20 V, I_D = −6.7 A, V_{GS} = −10 V, R_{GEN} = 6 Ω	–	6	12	ns
t_r	Rise Time		–	15	26	ns
$t_{d(off)}$	Turn−Off Delay Time		–	22	35	ns
t_f	Fall Time		–	7	14	ns
$Q_{g(TOT)}$	Total Gate Charge at 10 V	V_{DS} = −20 V, I_D = −6.7 A, V_{GS} = −10 V	–	21	29	nC
Q_{gs}	Gate to Source Gate Charge		–	3.4	–	nC
Q_{gd}	Gate to Drain “Miller” Charge		–	4	–	nC
DRAIN−SOURCE DIODE CHARACTERISTICS						
V_{SD}	Source to Drain Diode Forward Voltage	V_{GS} = 0 V, I_S = −6.7 A (Note 2)	–	0.86	1.2	V
t_{rr}	Reverse Recovery Time	I_F = −6.7 A, di/dt = 100 A/μs	–	29	43	ns
Q_{rr}	Reverse Recovery Charge		–	30	44	nC

Product parametric performance is indicated in the Electrical Characteristics for the listed test conditions, unless otherwise noted. Product performance may not be indicated by the Electrical Characteristics if operated under different conditions.

1. $R_{\theta JA}$ is the sum of the junction−to−case and case−to−ambient thermal resistance where the case thermal reference is defined as the solder mounting surface of the drain pins. $R_{\theta JC}$ is guaranteed by design while $R_{\theta CA}$ is determined by the user’s board design.
   a. 40°C/W when mounted on a 1 in^2 pad of 2 oz copper.
   b. 96°C/W when mounted on a minimum pad.
2. Pulse Test: Pulse Width < 300 μs, Duty Cycle < 2.0%
3. Starting T_J = 25°C, L = 3 mH, I_{AS} = 7.5 A, V_{DD} = 40 V, V_{GS} = 10 V

TYPICAL CHARACTERISTICS (T_J = 25°C unless otherwise noted)

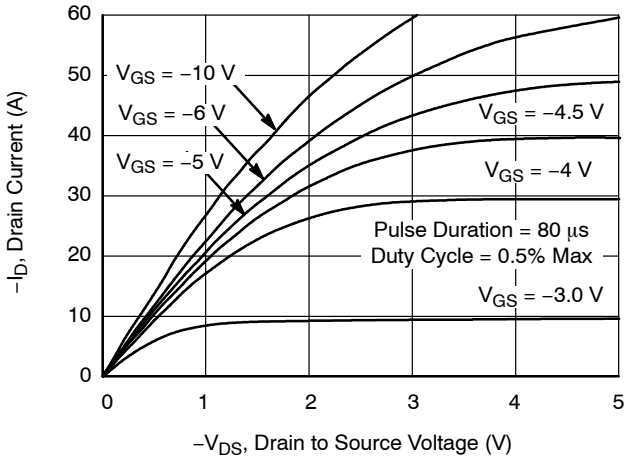

Figure 1. On Region Characteristics

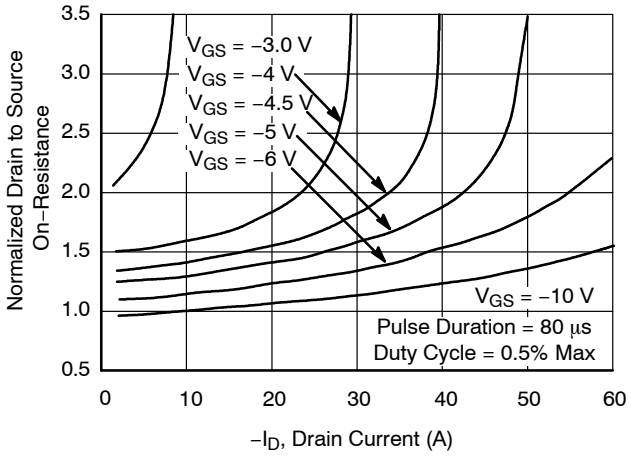

Figure 2. Normalized On−Resistance vs. Drain Current and Gate Voltage

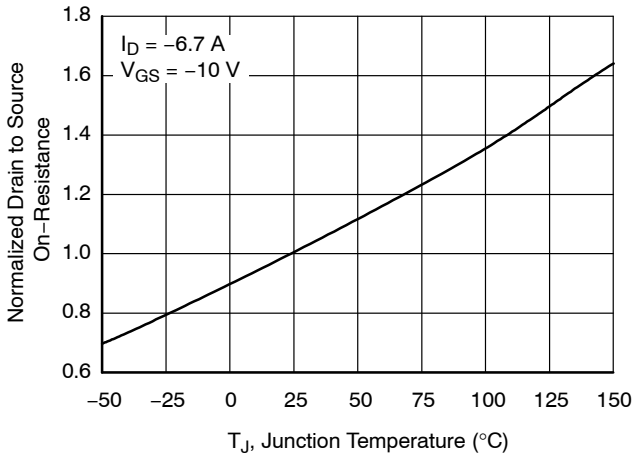

Figure 3. Normalized On−Resistance vs. Junction Temperature

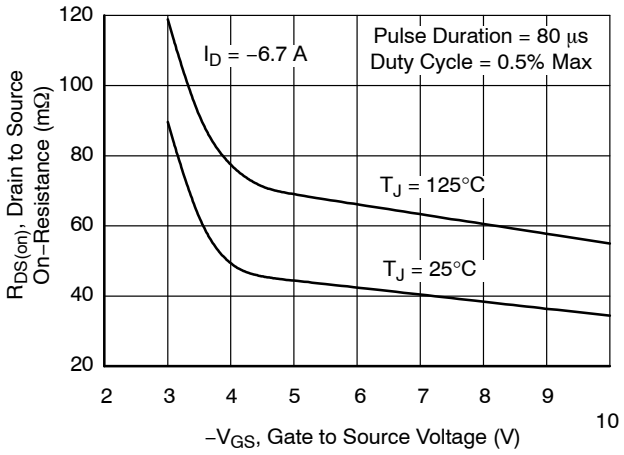

Figure 4. On−Resistance vs. Gate to Source Voltage

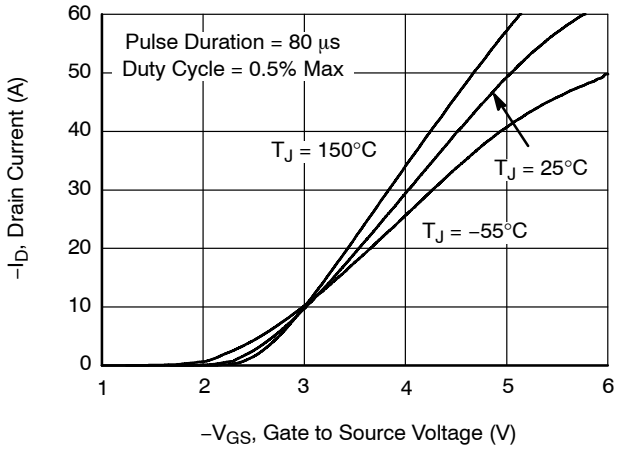

Figure 5. Transfer Characteristics

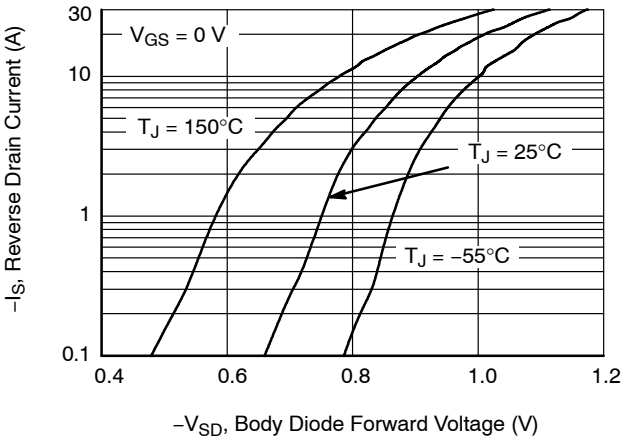

Figure 6. Source to Drain Diode Forward Voltage vs. Source Current

TYPICAL CHARACTERISTICS (T_J = 25°C unless otherwise noted) (continued)

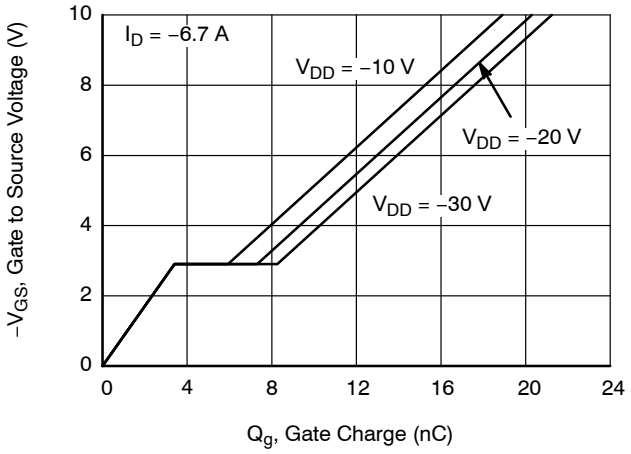

Figure 7. Gate Charge Characteristics

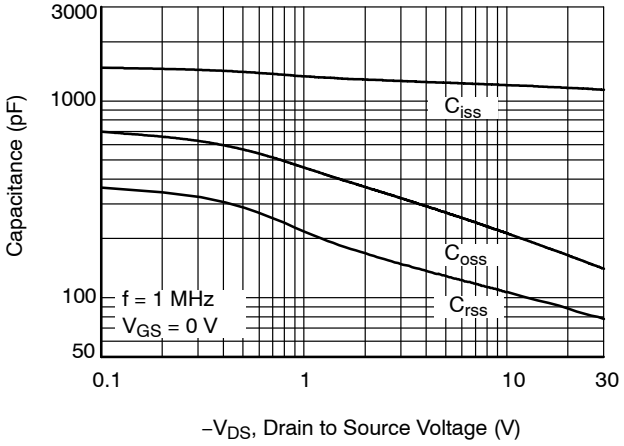

Figure 8. Capacitance vs. Drain to Source Voltage

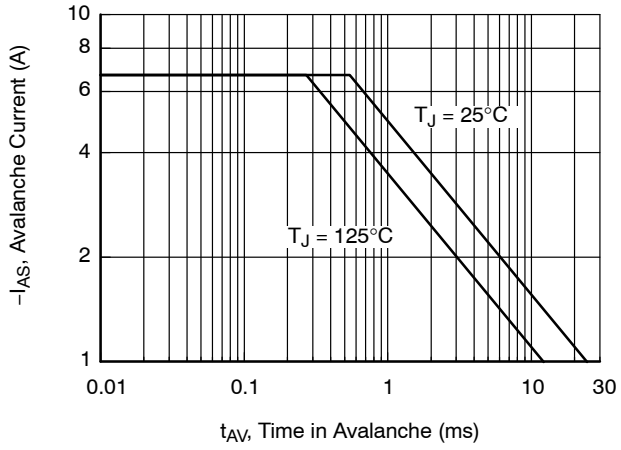

Figure 9. Unclamped Inductive Switching Capability

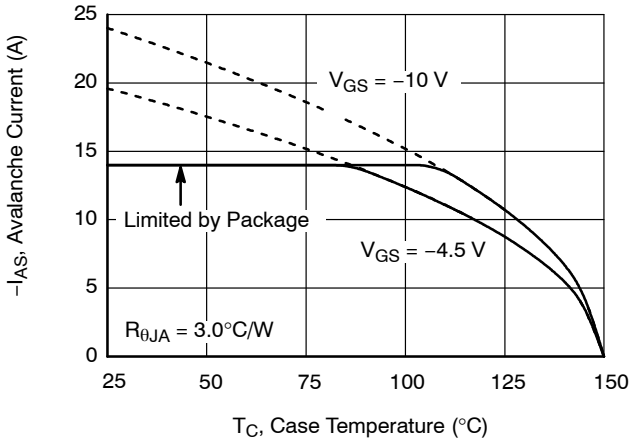

Figure 10. Maximum Continuous Drain Current vs. Case Temperature

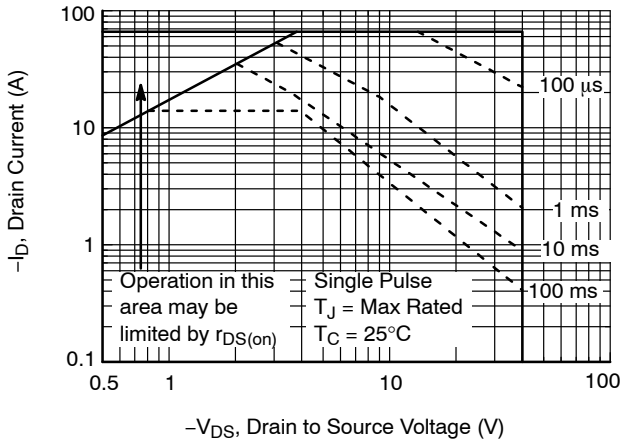

Figure 11. Forward Bias Safe Operating Area

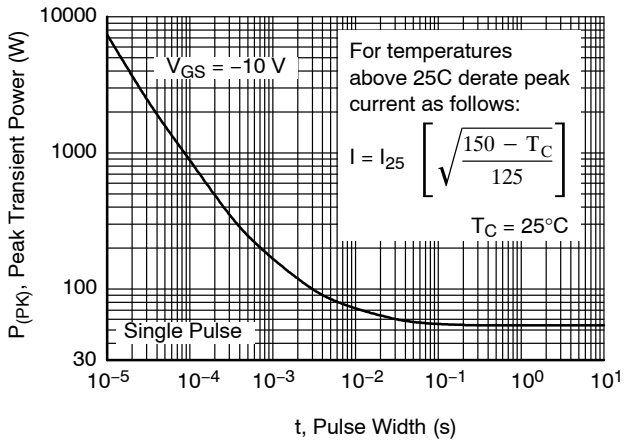

Figure 12. Single Pulse Maximum Power Dissipation

TYPICAL CHARACTERISTICS (T_J = 25°C unless otherwise noted) (continued)

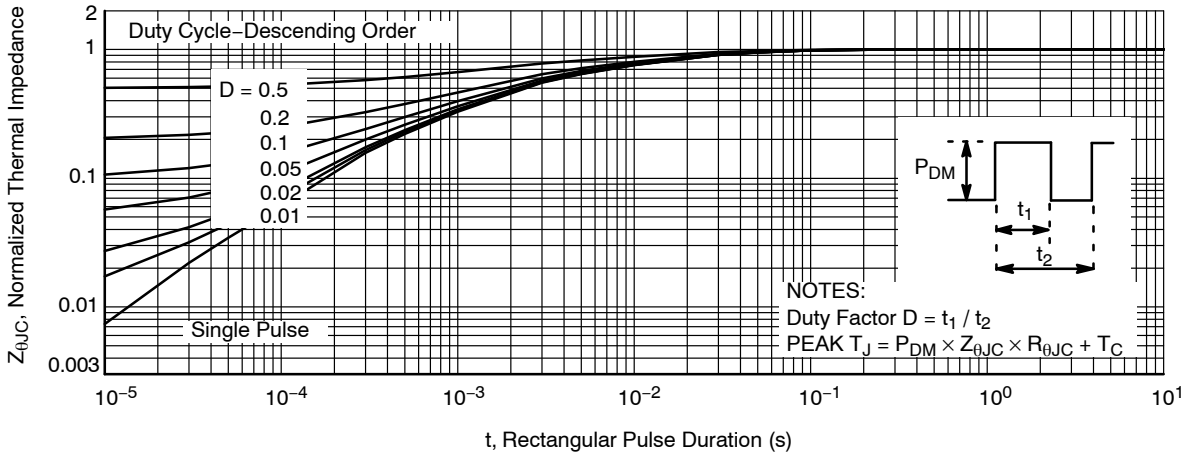

Figure 13. Transient Thermal Response Curve

POWERTRENCH is a registered trademark of Semiconductor Components Industries, LLC dba “**onsemi**” or its affiliates and/or subsidiaries in the United States and/or other countries.

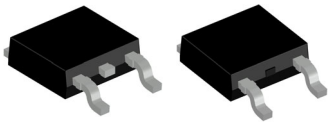

DPAK3 6.10x6.54x2.29, 4.57P
CASE 369AS
ISSUE B

DATE 20 DEC 2023

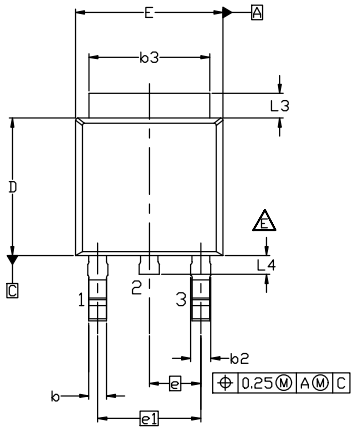

NON-DIODE PRODUCTS VERSION

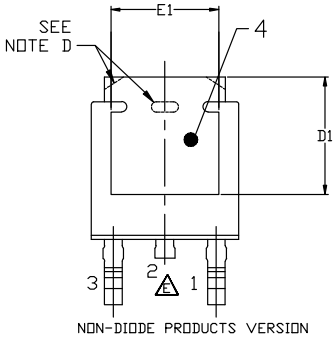

NON-DIODE PRODUCTS VERSION

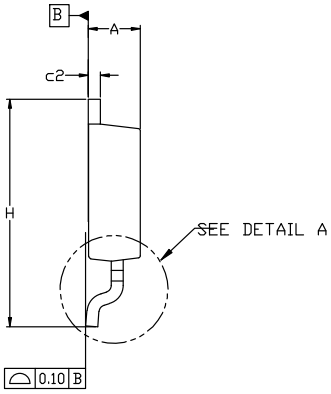

NOTES: UNLESS OTHERWISE SPECIFIED
A) THIS PACKAGE CONFORMS TO JEDEC, TO-252, ISSUE F, VARIATION AA.
B) ALL DIMENSIONS ARE IN MILLIMETERS.
C) DIMENSIONING AND TOLERANCING PER ASME Y14.5M-2018.
D) SUPPLIER DEPENDENT MOLD LOCKING HOLES OR CHAMFERED CORNERS OR EDGE PROTRUSION.
E) FOR DIODE PRODUCTS, L4 IS 0.25 MM MAX PLASTIC BODY STUB WITHOUT CENTER LEAD.
F) DIMENSIONS ARE EXCLUSIVE OF BURRS, MOLD FLASH AND TIE BAR EXTRUSIONS.
G) LAND PATTERN RECOMMENDATION IS BASED ON IPC7351A STD TO228P991X239-3N.

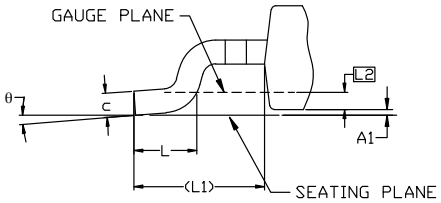

DETAIL A
(ROTATED -90°)
SCALE: 12X

DIM	MILLIMETERS		
	MIN.	NOM.	MAX.
A	2.18	2.29	2.39
A1	0.00	–	0.127
b	0.64	0.77	0.89
b2	0.76	0.95	1.14
b3	5.21	5.34	5.46
c	0.45	0.53	0.61
c2	0.45	0.52	0.58
D	5.97	6.10	6.22
D1	5.21	---	---
E	6.35	6.54	6.73
E1	4.32	---	---
e	2.286 BSC		
e1	4.572 BSC		
H	9.40	9.91	10.41
L	1.40	1.59	1.78
L1	2.90 REF		
L2	0.51 BSC		
L3	0.89	1.08	1.27
L4	---	---	1.02
θ	0°	---	10°

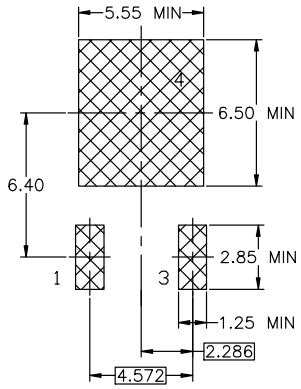

LAND PATTERN RECOMMENDATION

*FOR ADDITIONAL INFORMATION ON OUR PB-FREE STRATEGY AND SOLDERING DETAILS, PLEASE DOWNLOAD THE ON SEMICONDUCTOR SOLDERING AND MOUNTING TECHNIQUES REFERENCE MANUAL, SOLDERRM/D.

GENERIC MARKING DIAGRAM*



*This information is generic. Please refer to device data sheet for actual part marking. Pb−Free indicator, “G” or microdot “▪”, may or may not be present. Some products may not follow the Generic Marking.

XXXX = Specific Device Code
A = Assembly Location
Y = Year
WW = Work Week
ZZ = Assembly Lot Code

DOCUMENT NUMBER:	**98AON13810G**	Electronic versions are uncontrolled except when accessed directly from the Document Repository. Printed versions are uncontrolled except when stamped “CONTROLLED COPY” in red.
DESCRIPTION:	**DPAK3 6.10x6.54x2.29, 4.57P**	**PAGE 1 OF 1**

onsemi and onsemi are trademarks of Semiconductor Components Industries, LLC dba **onsemi** or its subsidiaries in the United States and/or other countries. **onsemi** reserves the right to make changes without further notice to any products herein. **onsemi** makes no warranty, representation or guarantee regarding the suitability of its products for any particular purpose, nor does **onsemi** assume any liability arising out of the application or use of any product or circuit, and specifically disclaims any and all liability, including without limitation special, consequential or incidental damages. **onsemi** does not convey any license under its patent rights nor the rights of others.

onsemi, , and other names, marks, and brands are registered and/or common law trademarks of Semiconductor Components Industries, LLC dba "**onsemi**" or its affiliates and/or subsidiaries in the United States and/or other countries. **onsemi** owns the rights to a number of patents, trademarks, copyrights, trade secrets, and other intellectual property. A listing of **onsemi**'s product/patent coverage may be accessed at www.onsemi.com/site/pdf/Patent−Marking.pdf. **onsemi** reserves the right to make changes at any time to any products or information herein, without notice. The information herein is provided "as−is" and **onsemi** makes no warranty, representation or guarantee regarding the accuracy of the information, product features, availability, functionality, or suitability of its products for any particular purpose, nor does **onsemi** assume any liability arising out of the application or use of any product or circuit, and specifically disclaims any and all liability, including without limitation special, consequential or incidental damages. Buyer is responsible for its products and applications using **onsemi** products, including compliance with all laws, regulations and safety requirements or standards, regardless of any support or applications information provided by **onsemi**. "Typical" parameters which may be provided in **onsemi** data sheets and/or specifications can and do vary in different applications and actual performance may vary over time. All operating parameters, including "Typicals" must be validated for each customer application by customer's technical experts. **onsemi** does not convey any license under any of its intellectual property rights nor the rights of others. **onsemi** products are not designed, intended, or authorized for use as a critical component in life support systems or any FDA Class 3 medical devices or medical devices with a same or similar classification in a foreign jurisdiction or any devices intended for implantation in the human body. Should Buyer purchase or use **onsemi** products for any such unintended or unauthorized application, Buyer shall indemnify and hold **onsemi** and its officers, employees, subsidiaries, affiliates, and distributors harmless against all claims, costs, damages, and expenses, and reasonable attorney fees arising out of, directly or indirectly, any claim of personal injury or death associated with such unintended or unauthorized use, even if such claim alleges that **onsemi** was negligent regarding the design or manufacture of the part. **onsemi** is an Equal Opportunity/Affirmative Action Employer. This literature is subject to all applicable copyright laws and is not for resale in any manner.

ADDITIONAL INFORMATION

TECHNICAL PUBLICATIONS:
Technical Library: www.onsemi.com/design/resources/technical−documentation
onsemi Website: www.onsemi.com

ONLINE SUPPORT: www.onsemi.com/support
For additional information, please contact your local Sales Representative at www.onsemi.com/support/sales

ENTEGRECİ

Bu belge www.entegreci.com üzerinden sunulmaktadır.

Elektronik komponent tedarikinde Entegreci

Entegreci, Eskişehir merkezli, Türkiye geneline satış yapan bir elektronik komponent mağazasıdır. Entegreler (IC), mikrodenetleyiciler, transistörler, diyotlar, pasif elemanlar, konnektörler, modüller ve geliştirme kartları tek adetten seri üretim adetlerine kadar satılır. Ürün sayfalarında güncel stok durumunu, fiyatı ve datasheet bağlantısını bulabilirsiniz.

Parça koduyla arama

Üretici parça numarasını yazın; stok ve fiyatı hemen görün.

www.entegreci.com

Ürün kategorileri

Entegreden kapasitöre tüm elektronik komponent kategorileri.

Kategorilere göz atın

Üreticiler

Aradığınız üreticinin ürünlerini tek sayfada inceleyin.

Üreticileri görün

Toplu alım ve teklif

Listede olmayan ya da yüksek adetli parçalar için teklif isteyin.

Teklif isteyin

www.entegreci.com | **destek@entegreci.com** | **0850 305 90 34**

Entegreci is an online electronic components store based in Türkiye. Search by manufacturer part number to see stock, prices and datasheets for integrated circuits, microcontrollers, transistors, passive components and connectors, or request a quote for parts that are not listed.

Bu sayfa Entegreci tarafından eklenmiştir. Belgenin önceki sayfaları asıl yayıncısına aittir ve içeriği değiştirilmemiştir; en güncel sürüm için belgenin yayıncısına başvurun.