MOSFET – N-Channel, SUPREMOS®

600 V, 47 A, 62 mΩ

FCH47N60N

Description

The SUPREMOS MOSFET is ON Semiconductor's next generation of high voltage super−junction (SJ) technology employing a deep trench filling process that differentiates it from the conventional SJ MOSFETs. This advanced technology and precise process control provides lowest Rsp on−resistance, superior switching performance and ruggedness. SUPREMOS MOSFET is suitable for high frequency switching power converter applications such as PFC, server/telecom power, FPD TV power, ATX power, and industrial power applications.

Features

- 650 V @ T_J = 150°C
- $R_{DS(on)}$ = 51.5 mΩ (Typ.) @ V_{GS} = 10 V, I_D = 23.5 A
- Ultra Low Gate Charge (Typ. Q_g = 115 nC)
- Low Effective Output Capacitance (Typ. $C_{oss(eff.)}$ = 511 pF)
- 100% Avalanche Tested
- This Device is Pb−Free and is RoHS Compliant

Applications

- Solar Inverter
- AC−DC Power Supply

ON Semiconductor®

www.onsemi.com

V_{DS}	$R_{DS(ON)}$ MAX	I_D MAX
600 V	62 mΩ @ 10 V	47 A

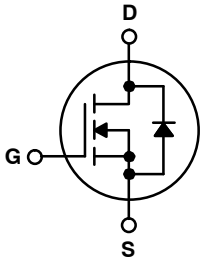

N-CHANNEL MOSFET

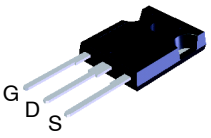

TO−247−3LD
CASE 340CK

MARKING DIAGRAM

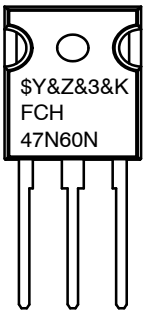

$Y	= ON Semiconductor Logo
&Z	= Assembly Plant Code
&3	= Numeric Date Code
&K	= Lot Code
FCH47N60N	= Specific Device Code

ORDERING INFORMATION

See detailed ordering and shipping information on page 2 of this data sheet.

© Semiconductor Components Industries, LLC, 2010

ABSOLUTE MAXIMUM RATINGS (T_C = 25°C unless otherwise noted)

Symbol	Parameter		Value	Unit
V_{DSS}	Drain to Source Voltage		600	V
V_{GSS}	Gate to Source Voltage		±30	V
I_D	Drain Current	– Continuous (T_C = 25°C)	47	A
		– Continuous (T_C = 100°C)	29.7	
I_{DM}	Drain Current	– Pulsed (Note 1)	141	A
E_{AS}	Single Pulsed Avalanche Energy (Note 2)		3068	mJ
I_{AR}	Avalanche Current (Note 1)		15.7	A
E_{AR}	Repetitive Avalanche Energy (Note 1)		3.7	mJ
dv/dt	MOSFET dv/dt		100	V/ns
	Peak Diode Recovery dv/dt (Note 3)		20	
P_D	Power Dissipation	(T_C = 25°C)	368	W
		– Derate above 25°C	2.94	W/°C
T_J, T_{STG}	Operating and Storage Temperature Range		–55 to + 150	°C
T_L	Maximum Lead Temperature for Soldering, 1/8″ from Case for 5 Second		300	°C

Stresses exceeding those listed in the Maximum Ratings table may damage the device. If any of these limits are exceeded, device functionality should not be assumed, damage may occur and reliability may be affected.

1. Repetitive Rating: Pulse width limited by maximum junction temperature.
2. I_{AS} = 15.7 A, R_G = 25 Ω, starting T_J = 25 °C
3. I_{SD} ≤ 47 A, di/dt ≤ 200 A/μs, V_{DD} ≤ 380 V, starting T_J = 25 °C

PACKAGE MARKING AND ORDERING INFORMATION

Part Number	Top Mark	Package	Package Method	Reel Size	Tape Width	Quantity
FCH47N60N	FCH47N60N	TO−247−3LD	Tube	N/A	N/A	30 Units

THERMAL CHARACTERISTICS

Symbol	Parameter	Value	Unit
$R_{\theta JC}$	Thermal Resistance, Junction to Case, Max.	0.34	°C/W
$R_{\theta JA}$	Thermal Resistance, Junction to Ambient, Max.	40	

ELECTRICAL CHARACTERISTICS (T_C = 25°C unless otherwise noted)

Symbol	Parameter	Test Condition	Min.	Typ.	Max.	Unit
OFF CHARACTERISTICS						
BV_{DSS}	Drain to Source Breakdown Voltage	I_D = 1 mA, V_{GS} = 0 V, T_C = 25°C	600	–	–	V
ΔBV_{DSS} / ΔT_J	Breakdown Voltage Temperature Coefficient	I_D = 1 mA, Referenced to 25°C	–	0.78	–	V/°C
I_{DSS}	Zero Gate Voltage Drain Current	V_{DS} = 480 V, V_{GS} = 0 V	–	–	10	μA
		V_{DS} = 480 V, V_{GS} = 0 V, T_C = 125°C	–	–	100	
I_{GSS}	Gate to Body Leakage Current	V_{GS} = +30 V, V_{DS} = 0 V	–	–	±100	nA
ON CHARACTERISTICS						
$V_{GS(th)}$	Gate Threshold Voltage	V_{GS} = V_{DS}, I_D = 250 mA	2	–	4	V
$R_{DS(on)}$	Static Drain to Source On Resistance	V_{GS} = 10 V, I_D = 23.5 A	–	51.5	62.0	mΩ
g_{FS}	Forward Transconductance	V_{DS} = 40 V, I_D = 23.5 A	–	56	–	S
DYNAMIC CHARACTERISTICS						
C_{iss}	Input Capacitance	V_{DS} = 100 V, V_{GS} = 0 V, f = 1 MHz	–	5037	6700	pF
C_{oss}	Output Capacitance		–	200	270	pF
C_{rss}	Reverse Transfer Capacitance		–	2.5	4.0	pF
C_{oss}	Output Capacitance	V_{DS} = 380 V, V_{GS} = 0 V, f = 1 MHz	–	108	–	pF
$C_{oss(eff.)}$	Effective Output Capacitance	V_{DS} = 0 V to 380 V, V_{GS} = 0 V	–	511	–	pF
$Q_{g(tot)}$	Total Gate Charge at 10 V	V_{DS} = 380 V, I_D = 23.5 A, V_{GS} = 10 V (Note 4)	–	115	151	nC
Q_{gs}	Gate to Source Gate Charge		–	21	–	nC
Q_{gd}	Gate to Drain “Miller” Charge		–	34	–	nC
ESR	Equivalent Series Resistance (G–S)	f = 1 MHz	–	0.9	–	Ω
SWITCHING CHARACTERISTICS						
$t_{d(on)}$	Turn-On Delay Time	V_{DD} = 380 V, I_D = 23.5 A, R_G = 4.7 Ω (Note 4)	–	11	32	ns
t_r	Turn–On Rise Time		–	9	28	ns
$t_{d(off)}$	Turn-Off Delay Time		–	135	280	ns
t_f	Turn–Off Fall Time		–	22	54	ns
DRAIN-SOURCE DIODE CHARACTERISTICS						
I_S	Maximum Continuous Drain to Source Diode Forward Current		–	–	47	A
I_{SM}	Maximum Pulsed Drain to Source Diode Forward Current		–	–	141	A
V_{SD}	Drain to Source Diode Forward Voltage	V_{GS} = 0 V, I_{SD} = 23.5 A	–	–	1.2	V
t_{rr}	Reverse Recovery Time	V_{GS} = 0 V, I_{SD} = 23.5 A, dI_F/dt = 100 A/ms	–	495	–	ns
Q_{rr}	Reverse Recovery Charge		–	12	–	μC

Product parametric performance is indicated in the Electrical Characteristics for the listed test conditions, unless otherwise noted. Product performance may not be indicated by the Electrical Characteristics if operated under different conditions.

4. Essentially Independent of Operating Temperature Typical Characteristics.

TYPICAL CHARACTERISTICS

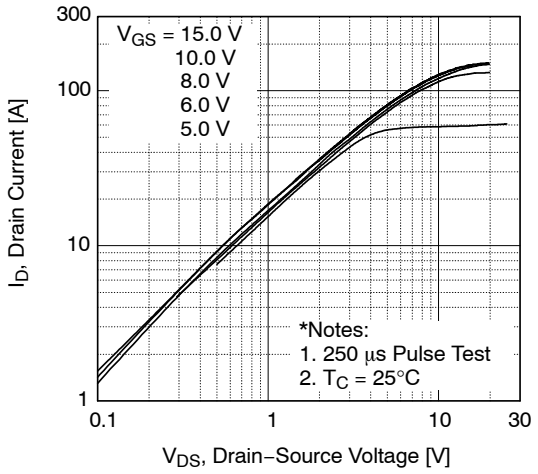

Figure 1. On−Region Characteristics

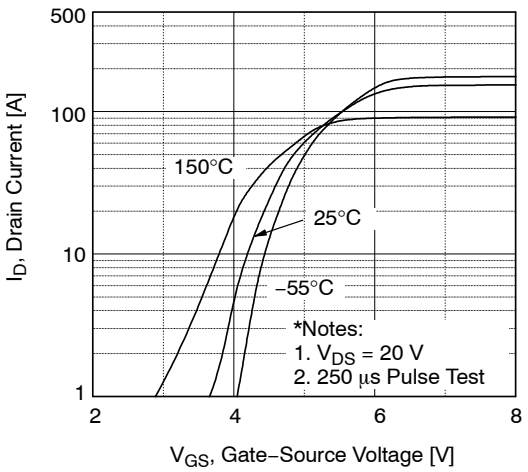

Figure 2. Transfer Characteristics

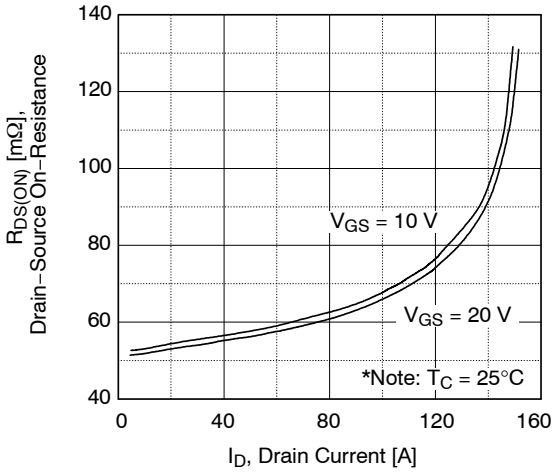

Figure 3. On−Resistance Variation vs. Drain Current and Gate Voltage

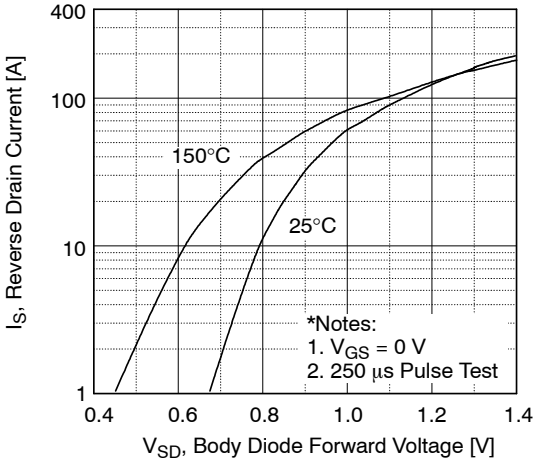

Figure 4. Body Diode Forward Voltage Variation vs. Source Current and Temperature

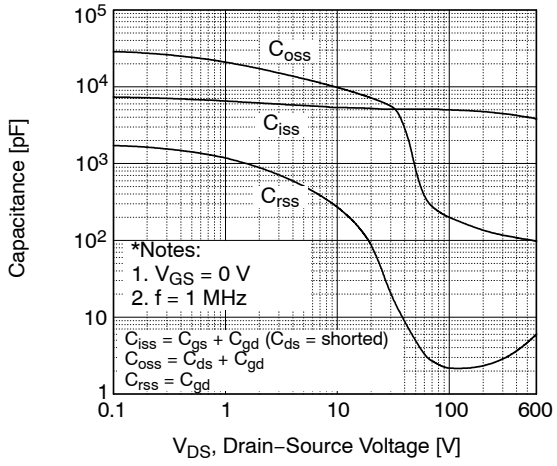

Figure 5. Capacitance Characteristics

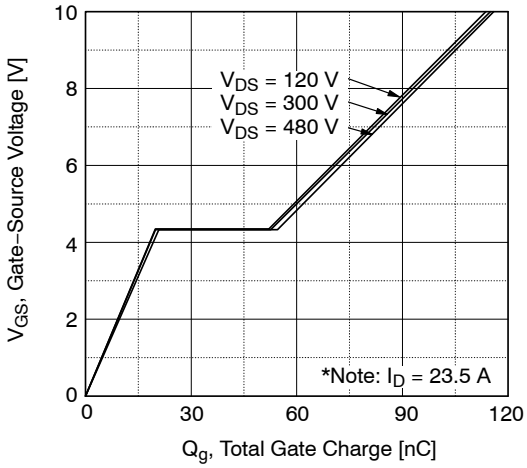

Figure 6. Gate Charge Characteristics

TYPICAL CHARACTERISTICS (continued)

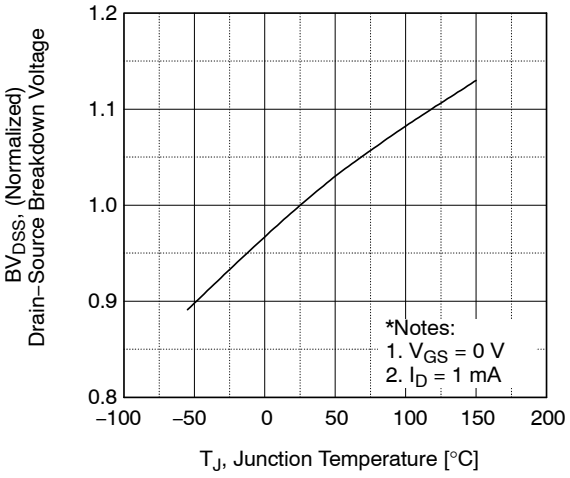

Figure 7. Breakdown Voltage Variation vs. Temperature

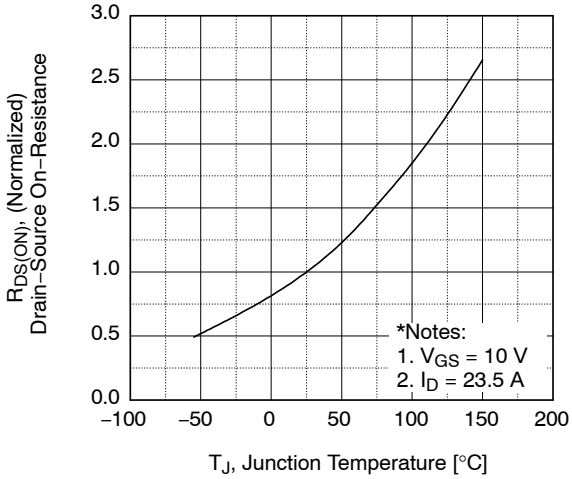

Figure 8. On−Resistance Variation vs. Temperature

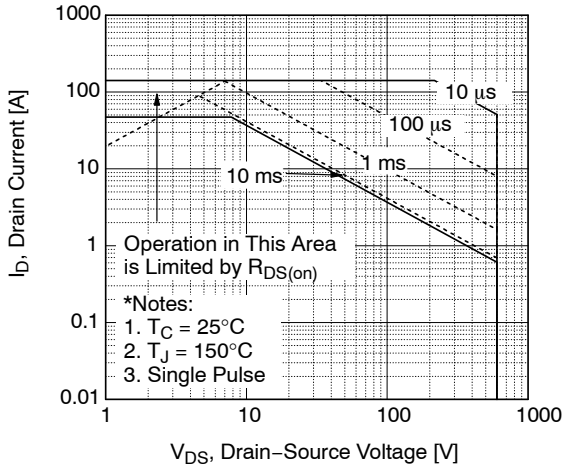

Figure 9. Maximum Safe Operating Area

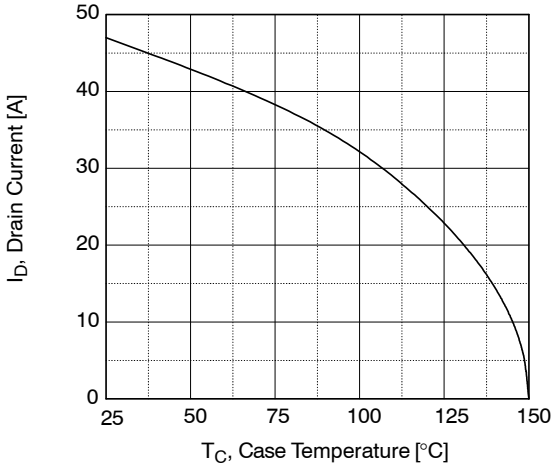

Figure 10. Maximum Drain Current vs. Case Temperature

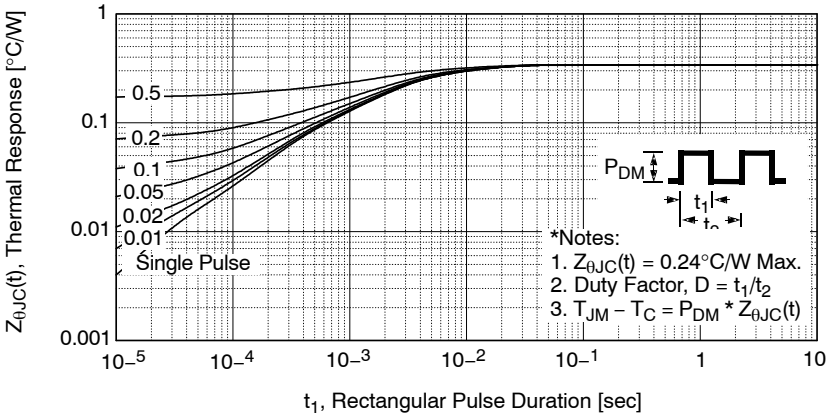

Figure 11. Transient Thermal Response Curve

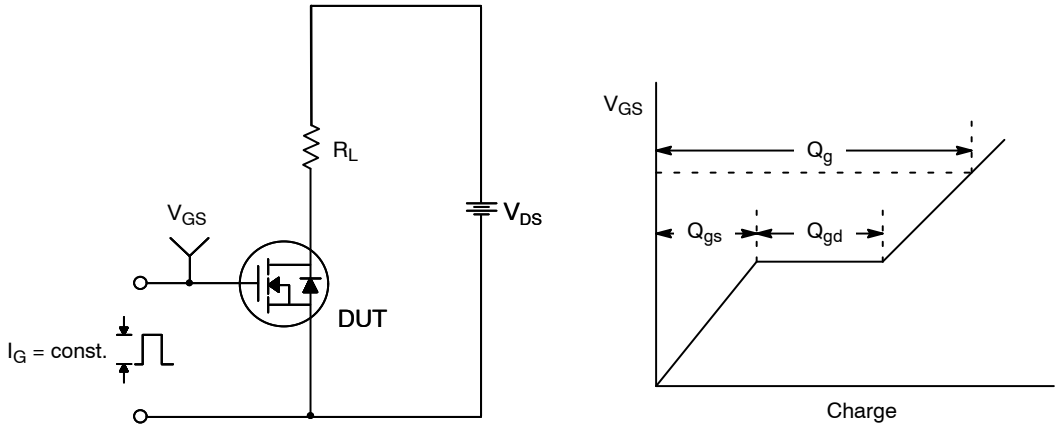

Figure 12. Gate Charge Test Circuit & Waveform

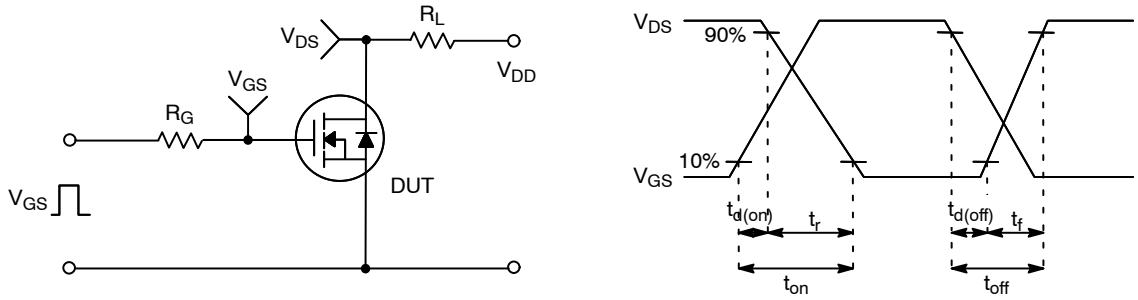

Figure 13. Resistive Switching Test Circuit & Waveforms

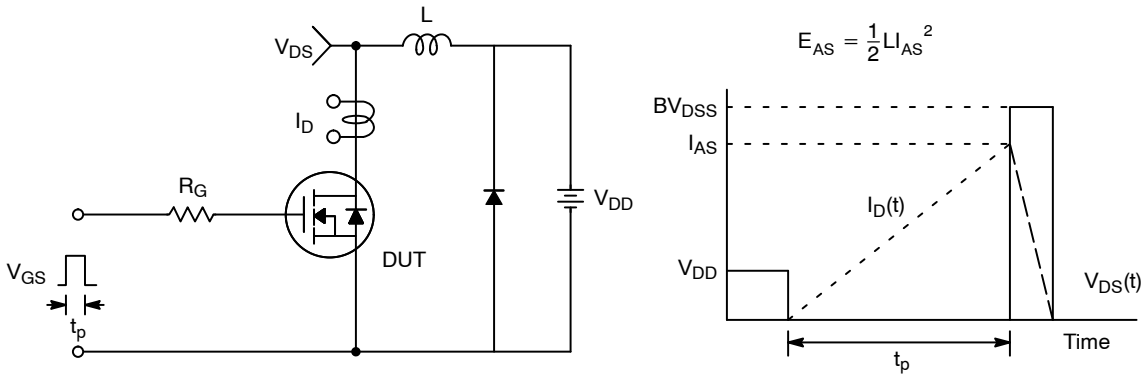

Figure 14. Unclamped Inductive Switching Test Circuit & Waveforms

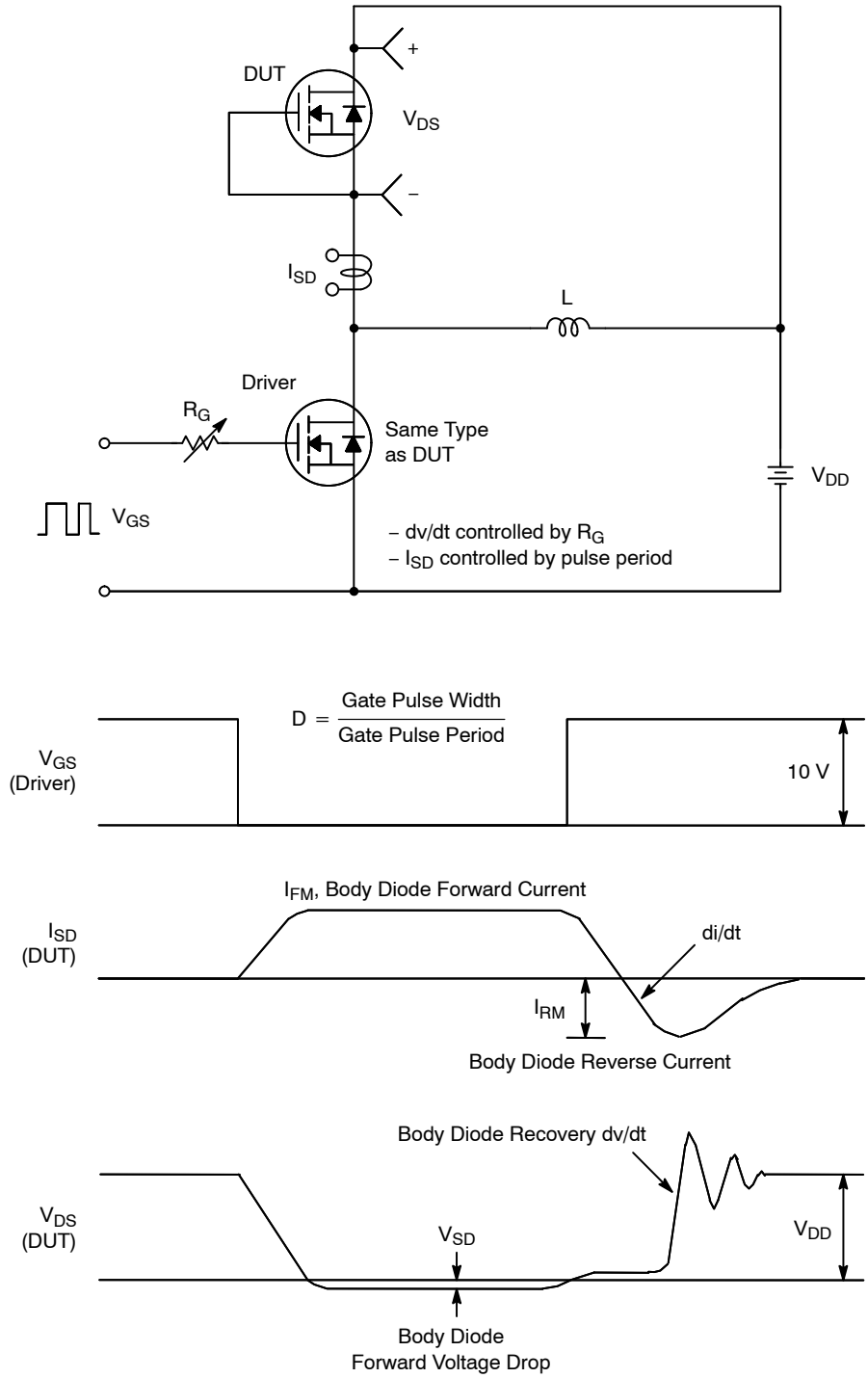

Figure 15. Peak Diode Recovery dv/dt Test Circuit & Waveforms

SUPREMOS is a registered trademark of Semiconductor Components Industries, LLC (SCILLC) or its subsidiaries in the United States and/or other countries.

TO−247−3LD SHORT LEAD
CASE 340CK
ISSUE A

DATE 31 JAN 2019

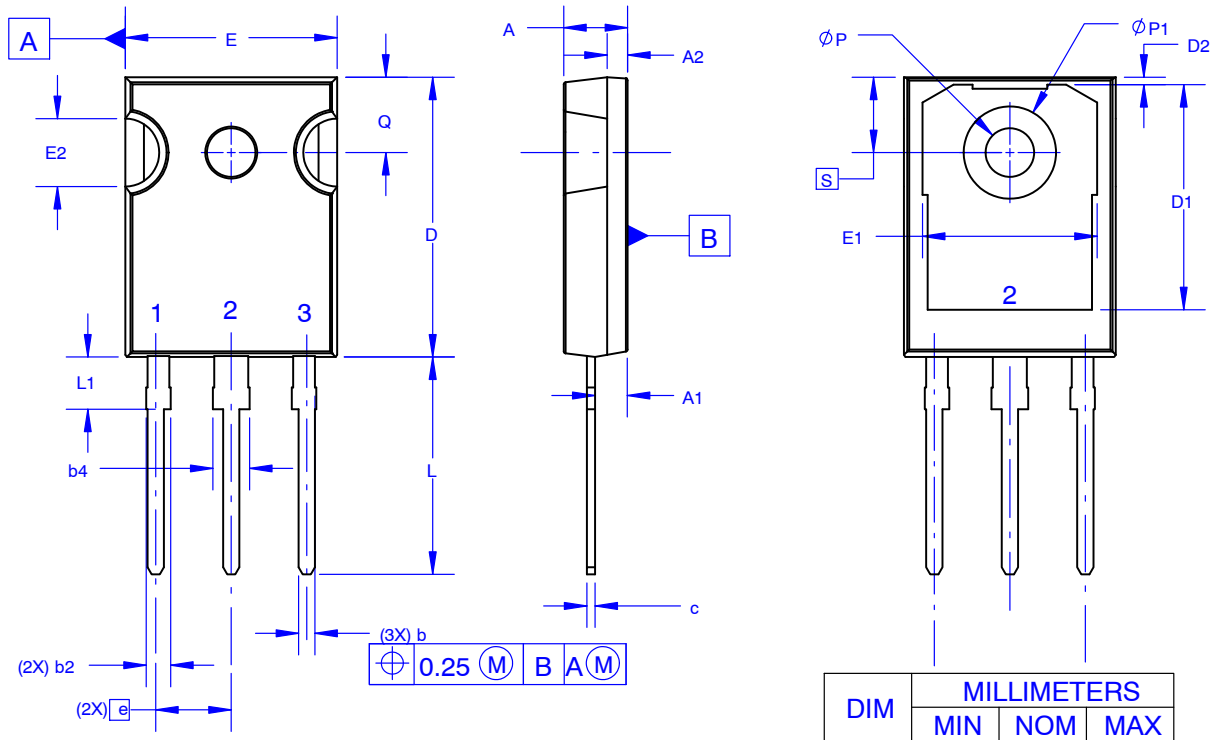

DIM	MILLIMETERS		
	MIN	NOM	MAX
A	4.58	4.70	4.82
A1	2.20	2.40	2.60
A2	1.40	1.50	1.60
b	1.17	1.26	1.35
b2	1.53	1.65	1.77
b4	2.42	2.54	2.66
c	0.51	0.61	0.71
D	20.32	20.57	20.82
D1	13.08	~	~
D2	0.51	0.93	1.35
E	15.37	15.62	15.87
E1	12.81	~	~
E2	4.96	5.08	5.20
e	~	5.56	~
L	15.75	16.00	16.25
L1	3.69	3.81	3.93
ØP	3.51	3.58	3.65
ØP1	6.60	6.80	7.00
Q	5.34	5.46	5.58
S	5.34	5.46	5.58

NOTES: UNLESS OTHERWISE SPECIFIED.

A. DIMENSIONS ARE EXCLUSIVE OF BURRS, MOLD FLASH, AND TIE BAR EXTRUSIONS.
B. ALL DIMENSIONS ARE IN MILLIMETERS.
C. DRAWING CONFORMS TO ASME Y14.5 - 2009.
D. DIMENSION A1 TO BE MEASURED IN THE REGION DEFINED BY L1.
E. LEAD FINISH IS UNCONTROLLED IN THE REGION DEFINED BY L1.

GENERIC MARKING DIAGRAM*

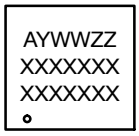

XXXX = Specific Device Code
A = Assembly Location
Y = Year
WW = Work Week
ZZ = Assembly Lot Code

*This information is generic. Please refer to device data sheet for actual part marking. Pb−Free indicator, “G” or microdot “▪”, may or may not be present. Some products may not follow the Generic Marking.

DOCUMENT NUMBER:	**98AON13851G**	Electronic versions are uncontrolled except when accessed directly from the Document Repository. Printed versions are uncontrolled except when stamped “CONTROLLED COPY” in red.
DESCRIPTION:	**TO−247−3LD SHORT LEAD**	**PAGE 1 OF 1**

onsemi and onsemi are trademarks of Semiconductor Components Industries, LLC dba **onsemi** or its subsidiaries in the United States and/or other countries. **onsemi** reserves the right to make changes without further notice to any products herein. **onsemi** makes no warranty, representation or guarantee regarding the suitability of its products for any particular purpose, nor does **onsemi** assume any liability arising out of the application or use of any product or circuit, and specifically disclaims any and all liability, including without limitation special, consequential or incidental damages. **onsemi** does not convey any license under its patent rights nor the rights of others.

© Semiconductor Components Industries, LLC, 2016

onsemi, , and other names, marks, and brands are registered and/or common law trademarks of Semiconductor Components Industries, LLC dba "**onsemi**" or its affiliates and/or subsidiaries in the United States and/or other countries. **onsemi** owns the rights to a number of patents, trademarks, copyrights, trade secrets, and other intellectual property. A listing of **onsemi**'s product/patent coverage may be accessed at www.onsemi.com/site/pdf/Patent−Marking.pdf. **onsemi** reserves the right to make changes at any time to any products or information herein, without notice. The information herein is provided "as−is" and **onsemi** makes no warranty, representation or guarantee regarding the accuracy of the information, product features, availability, functionality, or suitability of its products for any particular purpose, nor does **onsemi** assume any liability arising out of the application or use of any product or circuit, and specifically disclaims any and all liability, including without limitation special, consequential or incidental damages. Buyer is responsible for its products and applications using **onsemi** products, including compliance with all laws, regulations and safety requirements or standards, regardless of any support or applications information provided by **onsemi**. "Typical" parameters which may be provided in **onsemi** data sheets and/or specifications can and do vary in different applications and actual performance may vary over time. All operating parameters, including "Typicals" must be validated for each customer application by customer's technical experts. **onsemi** does not convey any license under any of its intellectual property rights nor the rights of others. **onsemi** products are not designed, intended, or authorized for use as a critical component in life support systems or any FDA Class 3 medical devices or medical devices with a same or similar classification in a foreign jurisdiction or any devices intended for implantation in the human body. Should Buyer purchase or use **onsemi** products for any such unintended or unauthorized application, Buyer shall indemnify and hold **onsemi** and its officers, employees, subsidiaries, affiliates, and distributors harmless against all claims, costs, damages, and expenses, and reasonable attorney fees arising out of, directly or indirectly, any claim of personal injury or death associated with such unintended or unauthorized use, even if such claim alleges that **onsemi** was negligent regarding the design or manufacture of the part. **onsemi** is an Equal Opportunity/Affirmative Action Employer. This literature is subject to all applicable copyright laws and is not for resale in any manner.

ADDITIONAL INFORMATION

TECHNICAL PUBLICATIONS:
Technical Library: www.onsemi.com/design/resources/technical−documentation
onsemi Website: www.onsemi.com

ONLINE SUPPORT: www.onsemi.com/support
For additional information, please contact your local Sales Representative at www.onsemi.com/support/sales

ENTEGRECİ

Bu belge www.entegreci.com üzerinden sunulmaktadır.

Elektronik komponent tedarikinde Entegreci

Entegreci, Eskişehir merkezli, Türkiye geneline satış yapan bir elektronik komponent mağazasıdır. Entegreler (IC), mikrodenetleyiciler, transistörler, diyotlar, pasif elemanlar, konnektörler, modüller ve geliştirme kartları tek adetten seri üretim adetlerine kadar satılır. Ürün sayfalarında güncel stok durumunu, fiyatı ve datasheet bağlantısını bulabilirsiniz.

Parça koduyla arama

Üretici parça numarasını yazın; stok ve fiyatı hemen görün.

www.entegreci.com

Ürün kategorileri

Entegreden kapasitöre tüm elektronik komponent kategorileri.

Kategorilere göz atın

Üreticiler

Aradığınız üreticinin ürünlerini tek sayfada inceleyin.

Üreticileri görün

Toplu alım ve teklif

Listede olmayan ya da yüksek adetli parçalar için teklif isteyin.

Teklif isteyin

www.entegreci.com | **destek@entegreci.com** | **0850 305 90 34**

Entegreci is an online electronic components store based in Türkiye. Search by manufacturer part number to see stock, prices and datasheets for integrated circuits, microcontrollers, transistors, passive components and connectors, or request a quote for parts that are not listed.

Bu sayfa Entegreci tarafından eklenmiştir. Belgenin önceki sayfaları asıl yayıncısına aittir ve içeriği değiştirilmemiştir; en güncel sürüm için belgenin yayıncısına başvurun.