Is Now Part of

ON Semiconductor®

To learn more about ON Semiconductor, please visit our website at
www.onsemi.com

Please note: As part of the Fairchild Semiconductor integration, some of the Fairchild orderable part numbers will need to change in order to meet ON Semiconductor's system requirements. Since the ON Semiconductor product management systems do not have the ability to manage part nomenclature that utilizes an underscore (_), the underscore (_) in the Fairchild part numbers will be changed to a dash (-). This document may contain device numbers with an underscore (_). Please check the ON Semiconductor website to verify the updated device numbers. The most current and up-to-date ordering information can be found at www.onsemi.com. Please email any questions regarding the system integration to Fairchild_questions@onsemi.com.

DISCONTINUED
THIS DEVICE IS NOT RECOMMENDED FOR NEW DESIGN
PLEASE CONTACT YOUR onsemi
REPRESENTATIVE FOR INFORMATION

ON Semiconductor and the ON Semiconductor logo are trademarks of Semiconductor Components Industries, LLC dba ON Semiconductor or its subsidiaries in the United States and/or other countries. ON Semiconductor owns the rights to a number of patents, trademarks, copyrights, trade secrets, and other intellectual property. A listing of ON Semiconductor's product/patent coverage may be accessed at www.onsemi.com/site/pdf/Patent-Marking.pdf. ON Semiconductor reserves the right to make changes without further notice to any products herein. ON Semiconductor makes no warranty, representation or guarantee regarding the suitability of its products for any particular purpose, nor does ON Semiconductor assume any liability arising out of the application or use of any product or circuit, and specifically disclaims any and all liability, including without limitation special, consequential or incidental damages. Buyer is responsible for its products and applications using ON Semiconductor products, including compliance with all laws, regulations and safety requirements or standards, regardless of any support or applications information provided by ON Semiconductor. "Typical" parameters which may be provided in ON Semiconductor data sheets and/or specifications can and do vary in different applications and actual performance may vary over time. All operating parameters, including "Typicals" must be validated for each customer application by customer's technical experts. ON Semiconductor does not convey any license under its patent rights nor the rights of others. ON Semiconductor products are not designed, intended, or authorized for use as a critical component in life support systems or any FDA Class 3 medical devices or medical devices with a same or similar classification in a foreign jurisdiction or any devices intended for implantation in the human body. Should Buyer purchase or use ON Semiconductor products for any such unintended or unauthorized application, Buyer shall indemnify and hold ON Semiconductor and its officers, employees, subsidiaries, affiliates, and distributors harmless against all claims, costs, damages, and expenses, and reasonable attorney fees arising out of, directly or indirectly, any claim of personal injury or death associated with such unintended or unauthorized use, even if such claim alleges that ON Semiconductor was negligent regarding the design or manufacture of the part. ON Semiconductor is an Equal Opportunity/Affirmative Action Employer. This literature is subject to all applicable copyright laws and is not for resale in any manner.

FAIRCHILD SEMICONDUCTOR®

May 2024

FAN7621B
PFM Controller for Half-Bridge Resonant Converters

Features

- Variable Frequency Control with 50% Duty Cycle for Half-bridge Resonant Converter Topology
- High Efficiency through Zero Voltage Switching (ZVS)
- Fixed Dead Time (350ns)
- Up to 300kHz Operating Frequency
- Pulse Skipping for Frequency Limit (Programmable) at Light-Load Condition
- Remote On/Off Control using CON Pin
- Protection Functions: Over-Voltage Protection (OVP), Overload Protection (OLP), Over-Current Protection (OCP), Abnormal Over-Current Protection (AOCP), Internal Thermal Shutdown (TSD)

Applications

- PDP and LCD TVs
- Desktop PCs and Servers
- Adapters
- Telecom Power Supplies
- Video Game Consoles

Description

The FAN7621B is a pulse frequency modulation controller for high-efficiency half-bridge resonant converters. Offering everything necessary to build a reliable and robust resonant converter, the FAN7621B simplifies designs and improves productivity, while improving performance. The FAN7621B includes a high-side gate-drive circuit and accurate current controlled oscillator, frequency limit circuit, soft-start, and built-in protection functions. The high-side gate-drive circuit has a common mode noise cancellation capability, which guarantees stable operation with excellent noise immunity. Using the zero-voltage-switching (ZVS) technique dramatically reduces the switching losses and efficiency is significantly improved. The ZVS also reduces the switching noise noticeably, which allows a small-sized Electromagnetic Interference (EMI) filter.

The FAN7621B can be applied to various resonant converter topologies, such as series resonant, parallel resonant, and LLC resonant converters.

Related Resources

AN4151 — Half-bridge LLC Resonant Converter Design using FSFR-series Fairchild Power Switch (FPS™)

Ordering Information

Part Number	Operating Junction Temperature	Package	Packaging Method
FAN7621BSJ	-40°C ~ 130°C	16-Lead Small Outline Package (SOP)	Tube
FAN7621BSJX			Tape & Reel

DISCONTINUED
THIS DEVICE IS NOT RECOMMENDED FOR NEW DESIGN
PLEASE CONTACT YOUR onsemi
REPRESENTATIVE FOR INFORMATION

© 2009 Fairchild Semiconductor Corporation

Application Circuit Diagram

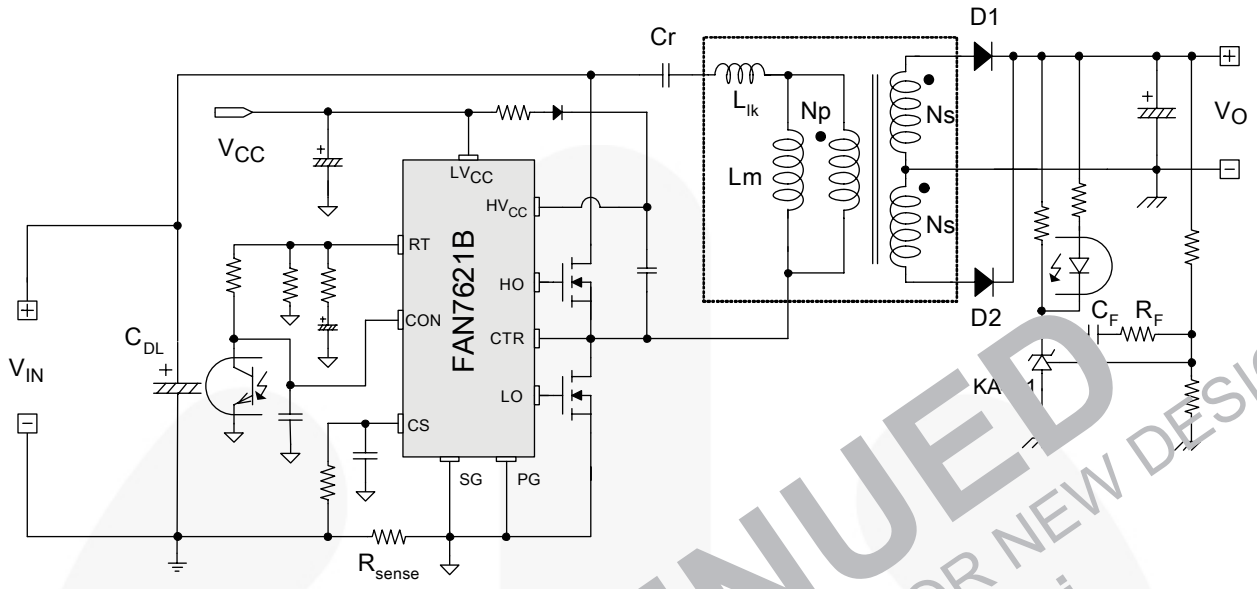

Figure 1. Typical Application Circuit (LLC Resonant Half-Bridge Converter)

Block Diagram

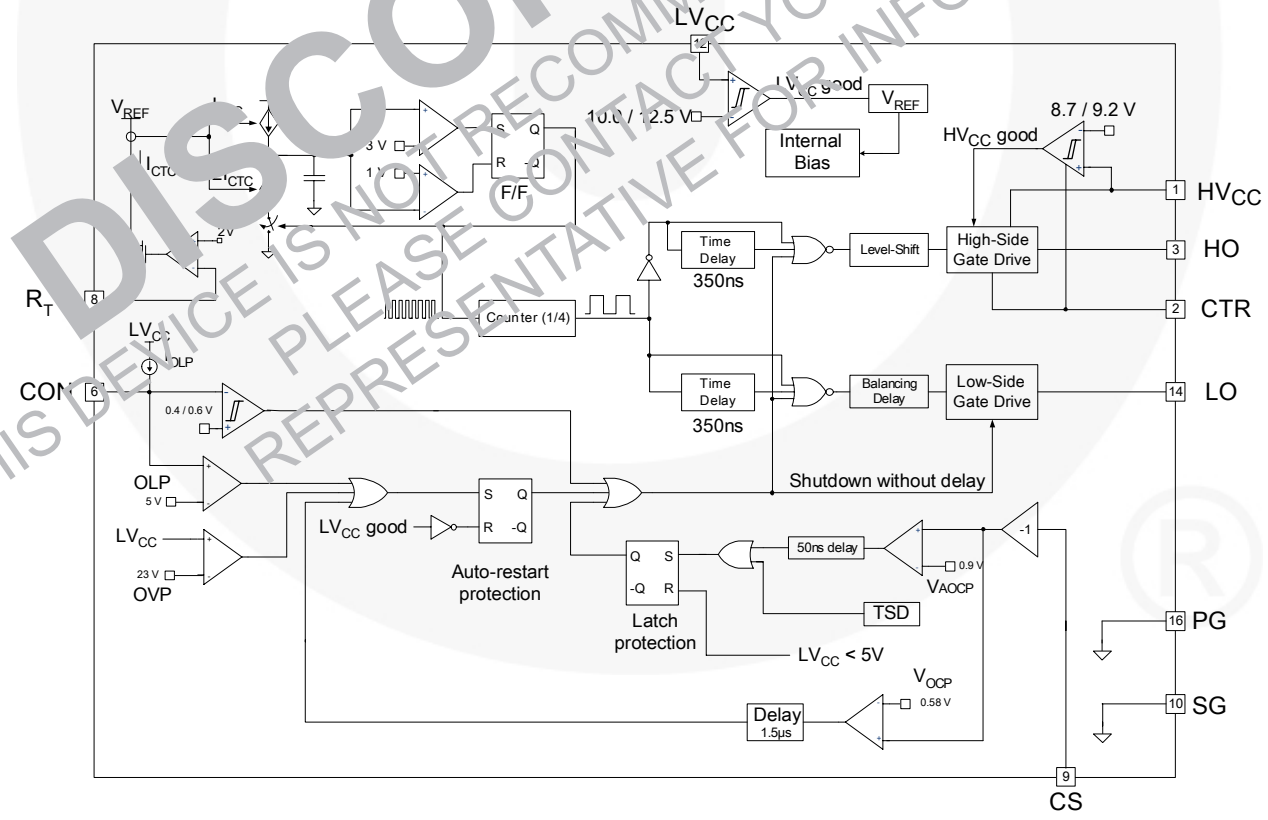

Figure 2. Internal Block Diagram

DISCONTINUED
THIS DEVICE IS NOT RECOMMENDED FOR NEW DESIGN
PLEASE CONTACT YOUR onsemi
REPRESENTATIVE FOR INFORMATION

Pin Configuration

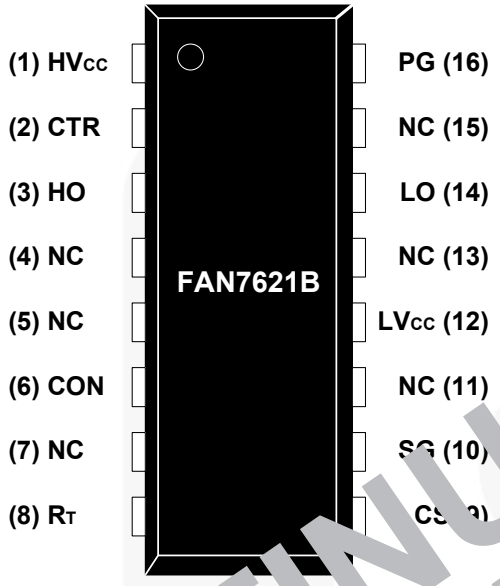

Figure 3. Package Diagram

Pin Definitions

Pin #	Name	Description
1	HV_{CC}	This is the supply voltage of the high-side gate-drive circuit IC.
2	CTR	This is the collector of the low-side MOSFET. Typically, a transformer is connected to this pin.
3	HO	This is the high-side gate driving signal.
4	NC	No connection.
5	NC	No connection.
6	CON	This pin is for a protection and enabling/disabling the controller. When the voltage of this pin is above 0.6V, the IC operation is enabled. When the voltage of this pin drops below 0.4V, gate drive signals for both MOSFETs are disabled. When the voltage of this pin increases above 5V, protection is triggered.
7	NC	No connection.
8	R_T	This pin programs the switching frequency. Typically, an opto-coupler is connected to control the switching frequency for the output voltage regulation.
9	CS	This pin senses the current flowing through the low-side MOSFET. Typically, negative voltage is applied on this pin.
10	SG	This pin is the control ground.
11	NC	No connection.
12	LV_{CC}	This pin is the supply voltage of the control IC.
13	NC	No connection.
14	LO	This is the low-side gate driving signal.
15	NC	No connection.
16	PG	This pin is the power ground. This pin is connected to the source of the low-side MOSFET.

DISCONTINUED
THIS DEVICE IS NOT RECOMMENDED FOR NEW DESIGN
PLEASE CONTACT YOUR onsemi
REPRESENTATIVE FOR INFORMATION

Absolute Maximum Ratings

Stresses exceeding the absolute maximum ratings may damage the device. The device may not function or be operable above the recommended operating conditions and stressing the parts to these levels is not recommended. In addition, extended exposure to stresses above the recommended operating conditions may affect device reliability. The absolute maximum ratings are stress ratings only. T_A=25°C unless otherwise specified.

Symbol	Parameter		Min.	Max.	Unit
V_{HO}	High-Side Gate Driving Voltage		V_{CTR}-0.3	HV_{CC}	V
V_{LO}	Low-Side Gate Driving Voltage		-0.3	LV_{CC}	
LV_{CC}	Low-Side Supply Voltage		-0.3	25.0	V
HV_{CC} to V_{CTR}	High-Side V_{CC} Pin to Center Voltage		-0.3	25.0	V
V_{CTR}	Center Voltage		-0.3		V
V_{CON}	Control Pin Input Voltage		-0.3	LV_{CC}	V
V_{CS}	Current Sense (CS) Pin Input Voltage			0	V
V_{RT}	R_T Pin Input Voltage		-0.	5.0	V
dV_{CTR}/dt	Allowable Center Voltage Slew Rate			50	V/ns
P_D	Total Power Dissipation	16-SOP		1.13	W
T_J	Maximum Junction Temperature[1]			+150	°C
	Recommended Operating Junction Temperature[1]		-40	+150	
T_{STG}	Storage Temperature Range		-55	+150	°C

Note:
1. The maximum value of the recommended operating junction temperature is limited by thermal shutdown.

Thermal Impedance

Symbol	Parameter		Value	Unit
θ_{JA}	Junction-to-Ambient Thermal Impedance	16-SOP	110	ºC/W

DISCONTINUED
THIS DEVICE IS NOT RECOMMENDED FOR NEW DESIGN
PLEASE CONTACT YOUR onsemi
REPRESENTATIVE FOR INFORMATION

Electrical Characteristics

T_A=25°C and LV_{CC}=17V unless otherwise specified.

Symbol	Parameter	Test Conditions	Min.	Typ.	Max.	Unit
Supply Section						
I_{LK}	Offset Supply Leakage Current	$HV_{CC}=V_{CTR}$			50	µA
I_QHV_{CC}	Quiescent HV_{CC} Supply Current	(HV_{CC}UV+) - 0.1V		50	120	µA
I_QLV_{CC}	Quiescent LV_{CC} Supply Current	(LV_{CC}UV+) - 0.1V		100	200	µA
I_OHV_{CC}	Operating HV_{CC} Supply Current (RMS Value)	f_{OSC}=100kHz, V_{CON} > 0.6V, C_{Load}=1nF		5	8	mA
		No Switching, V_{CON} < 0.4V		100	200	µA
I_OLV_{CC}	Operating LV_{CC} Supply Current (RMS Value)	f_{OSC}=100kHz, V_{CON} > 0.6V, C_{Load}=1nF		6	9	mA
		No Switching, V_{CON} < 0.4V		2	4	mA
UVLO Section						
LV_{CC}UV+	LV_{CC} Supply Under-Voltage Positive Going Threshold (LV_{CC} Start)		11.2	12.5	13.8	V
LV_{CC}UV-	LV_{CC} Supply Under-Voltage Negative Going Threshold (LV_{CC} Stop)		8.90	10.00	11.10	V
LV_{CC}UVH	LV_{CC} Supply Under-Voltage Hysteresis			2.5		V
HV_{CC}UV+	HV_{CC} Supply Under-Voltage Positive Going Threshold (HV_{CC} Start)		8.2	9.2	10.2	V
HV_{CC}UV-	HV_{CC} Supply Under-Voltage Negative Going Threshold (HV_{CC} Stop)		7.8	8.7	9.6	V
HV_{CC}UVH	HV_{CC} Supply Under-Voltage Hysteresis			0.5		V
Oscillator & Feedback Section						
V_{CONDIS}	Control Pin Disable Threshold Voltage		0.36	0.40	0.44	V
V_{CONEN}	Control Pin Enable Threshold Voltage		0.54	0.60	0.66	V
V_{RT}	I-I Converter Threshold Voltage		1.5	2.0	2.5	V
f_{OSC}	Output Oscillation Frequency	R_T=5.2kΩ	94	100	106	kHz
DC	Output Duty Cycle		48	50	52	%
f_{SS}	Internal Soft-Start Initial Frequency	$f_{SS}=f_{OSC}$+40kHz, R_T=5.2kΩ		140		kHz
t_{SS}	Internal Soft-Start Time		2	3	4	ms
Output Section						
I_{source}	Peak Sourcing Current	HV_{CC}=17V	250	360		mA
I_{sink}	Peak Sinking Current	HV_{CC}=17V	460	600		mA
t_r	Rising Time	C_{Load}=1nF, HV_{CC}=17V		65		ns
t_f	Falling Time			35		ns
V_{HOH}	High Level of High-Side Gate Driving Signal (V_{HVCC}-V_{HO})	I_O=20mA			1.0	V
V_{HOL}	Low Level of High-Side Gate Driving Signal				0.6	V
V_{LOH}	High Level of High-Side Gate Driving Signal (V_{LVCC}-V_{LO})				1.0	V
V_{LOL}	Low Level of High-Side Gate Driving Signal				0.6	V

DISCONTINUED
THIS DEVICE IS NOT RECOMMENDED FOR NEW DESIGN
PLEASE CONTACT YOUR onsemi
REPRESENTATIVE FOR INFORMATION

Electrical Characteristics (Continued)

T_A=25°C and LV_{CC}=17V unless otherwise specified.

Symbol	Parameter	Test Conditions	Min.	Typ.	Max.	Unit
Protection Section						
I_{OLP}	OLP Delay Current	V_{CON}=4V	3.8	5.0	6.2	μA
V_{OLP}	OLP Protection Voltage	V_{CON} > 3.5V	4.5	5.0	5.5	V
V_{OVP}	LV_{CC} Over-Voltage Protection	LV_{CC} > 21V	21	23	25	V
V_{AOCP}	AOCP Threshold Voltage		-1.0	-0.9	-0.8	V
t_{BAO}	AOCP Blanking Time			5		ns
V_{OCP}	OCP Threshold Voltage		-0.64	0.58	0.52	V
t_{BO}	OCP Blanking Time[2]		1.0	5	2.0	μs
t_{DA}	Delay Time (Low-Side) Detecting from V_{AOCP} to Switch Off[2]			250	400	ns
T_{SD}	Thermal Shutdown Temperature[2]		110	130	150	°C
I_{SU}	Protection Latch Sustain LV_{CC} Supply Current	LV_{CC}=7.5V		100	150	μA
V_{PRSET}	Protection Latch Reset LV_{CC} Supply Voltage		5			V
Dead-Time Control Section						
D_T	Dead Time			350		ns

Note:
2. These parameters, although guaranteed, are not tested in production.

DISCONTINUED
THIS DEVICE IS NOT RECOMMENDED FOR NEW DESIGN
PLEASE CONTACT YOUR onsemi
REPRESENTATIVE FOR INFORMATION

Typical Performance Characteristics

These characteristic graphs are normalized at T_A=25ºC.

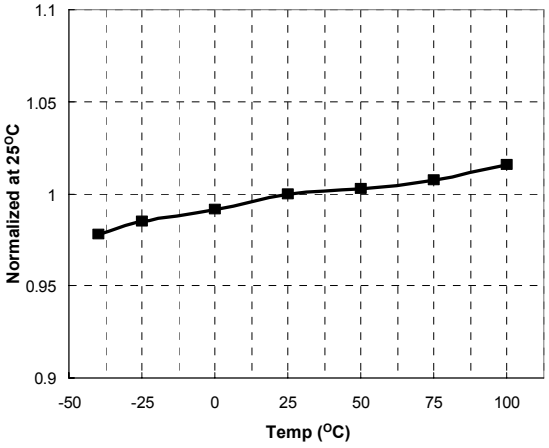

Figure 4. Low-Side MOSFET Duty Cycle vs. Temperature

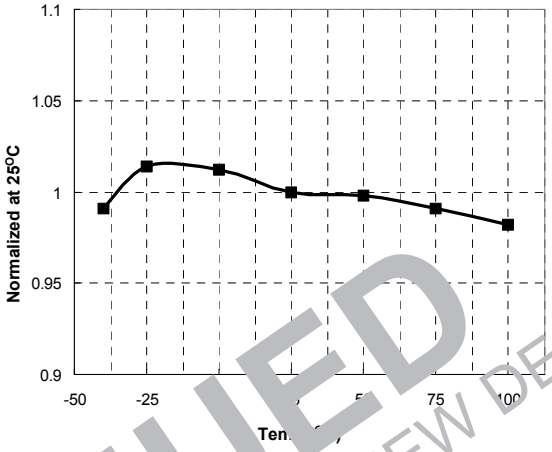

Figure 5. Switching Frequency vs. Temperature

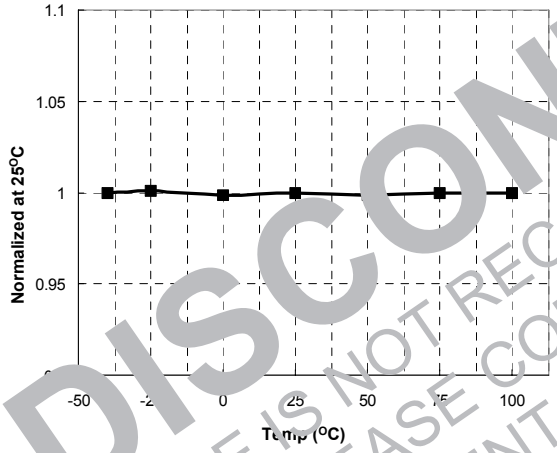

Figure 6. High-Side V_{CC} (HV_{CC}) Start vs. Temperature

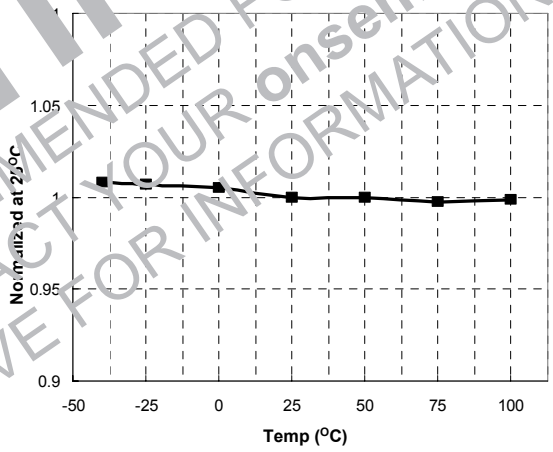

Figure 7. High-Side V_{CC} (HV_{CC}) Stop vs. Temperature

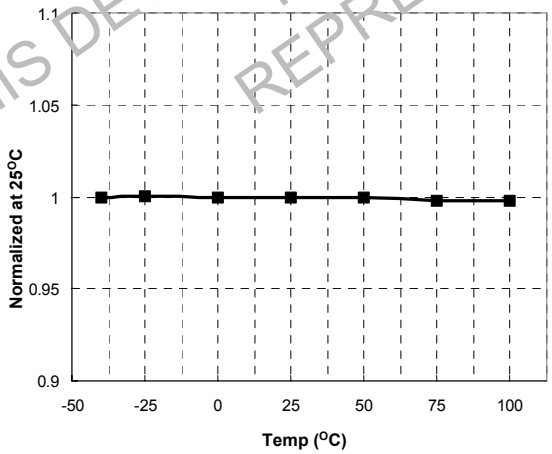

Figure 8. Low-Side V_{CC} (LV_{CC}) Start vs. Temperature

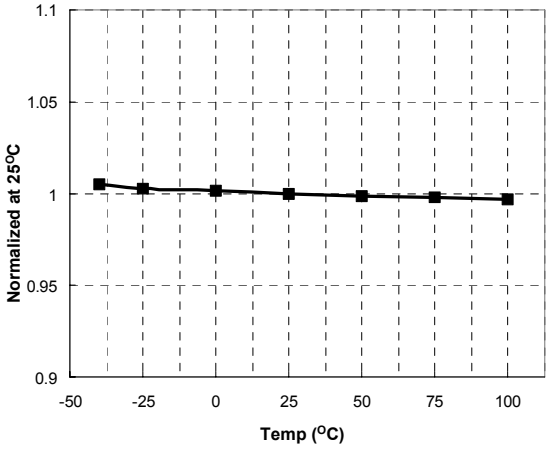

Figure 9. Low-Side V_{CC} (LV_{CC}) Stop vs. Temperature

DISCONTINUED
THIS DEVICE IS NOT RECOMMENDED FOR NEW DESIGN
PLEASE CONTACT YOUR onsemi
REPRESENTATIVE FOR INFORMATION

Typical Performance Characteristics (Continued)

These characteristic graphs are normalized at T_A=25ºC.

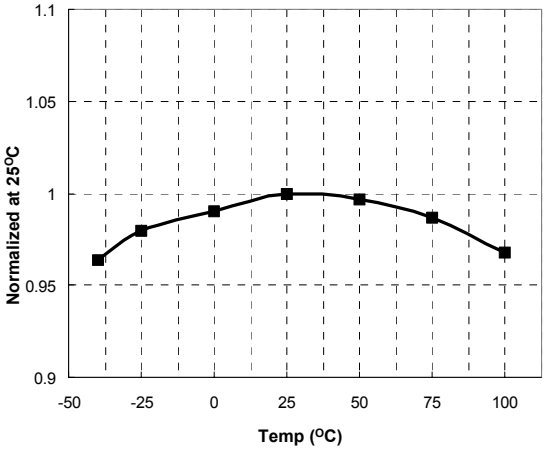

Figure 10. OLP Delay Current vs. Temperature

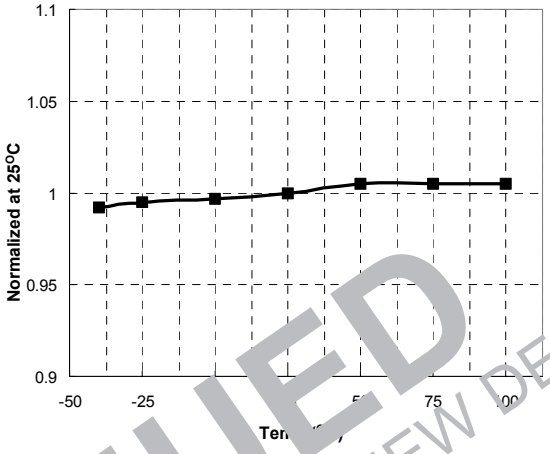

Figure 11. OLP Protection Voltage vs. Temperature

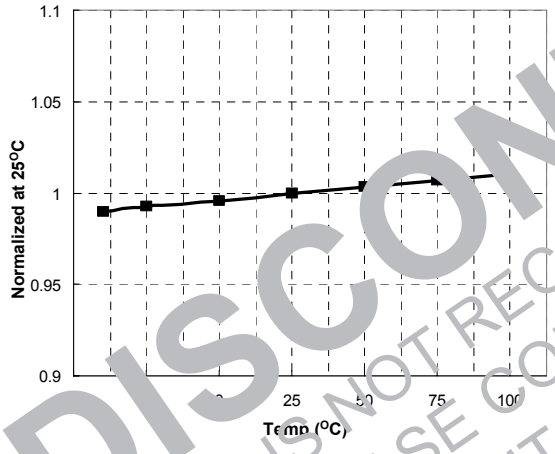

Figure 12. LV_{CC} OVP Voltage vs. Temperature

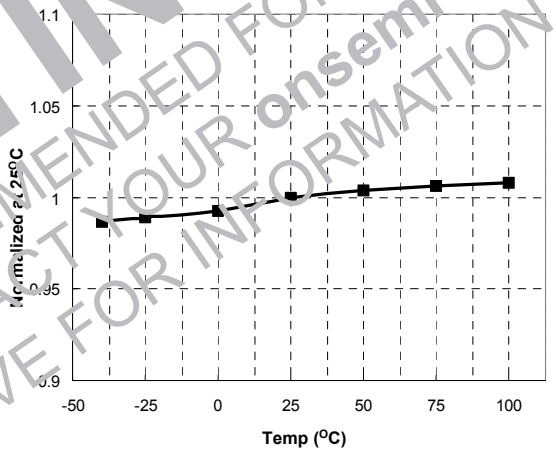

Figure 13. R_T Voltage vs. Temperature

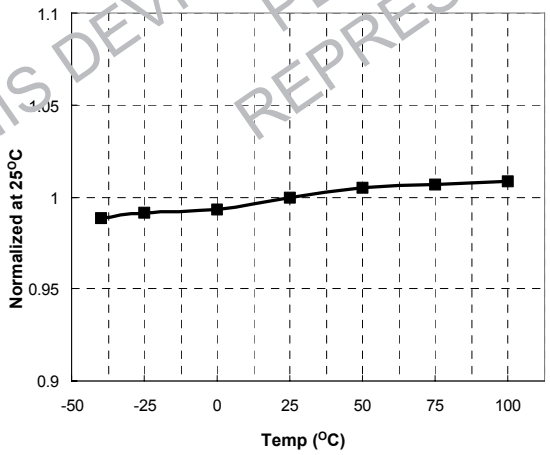

Figure 14. CON Pin Enable Voltage vs. Temperature

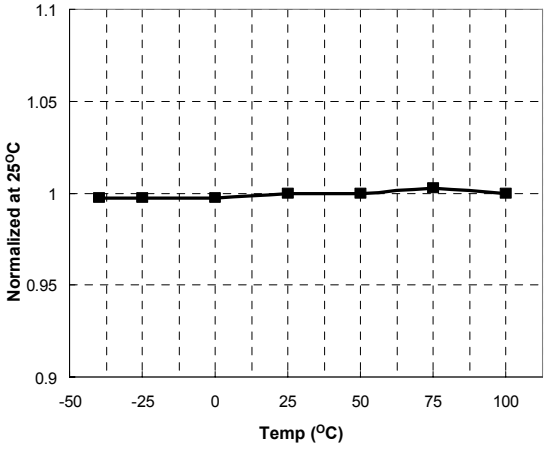

Figure 15. OCP Voltage vs. Temperature

DISCONTINUED
THIS DEVICE IS NOT RECOMMENDED FOR NEW DESIGN
PLEASE CONTACT YOUR onsemi
REPRESENTATIVE FOR INFORMATION

Functional Description

1. Basic Operation: FAN7621B is designed to drive high-side and low-side MOSFETs complementarily with 50% duty cycle. A fixed dead time of 350ns is introduced between consecutive transitions, as shown in Figure 16.

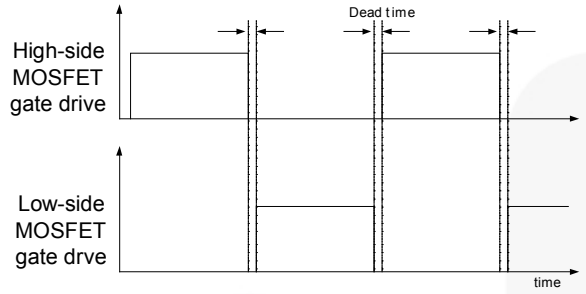

Figure 16. MOSFETs Gate Drive Signal

2. Internal Oscillator: FAN7621B employs a current-controlled oscillator, as shown in Figure 17. Internally, the voltage of R_T pin is regulated at 2V and the charging / discharging current for the oscillator capacitor, C_T, is obtained by copying the current flowing out of R_T pin (I_{CTC}) using a current mirror. Therefore, the switching frequency increases as I_{CTC} increases.

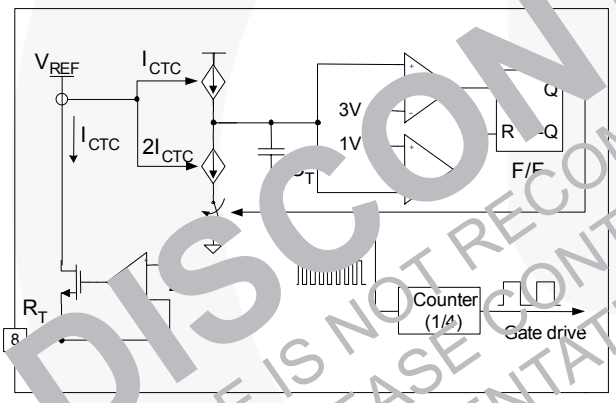

Figure 17. Current Controlled Oscillator

3. Frequency Setting: Figure 18 shows the typical voltage gain curve of a resonant converter, where the gain is inversely proportional to the switching frequency in the ZVS region. The output voltage can be regulated by modulating the switching frequency. Figure 19 shows the typical circuit configuration for R_T pin, where the opto-coupler transistor is connected to the R_T pin to modulate the switching frequency.

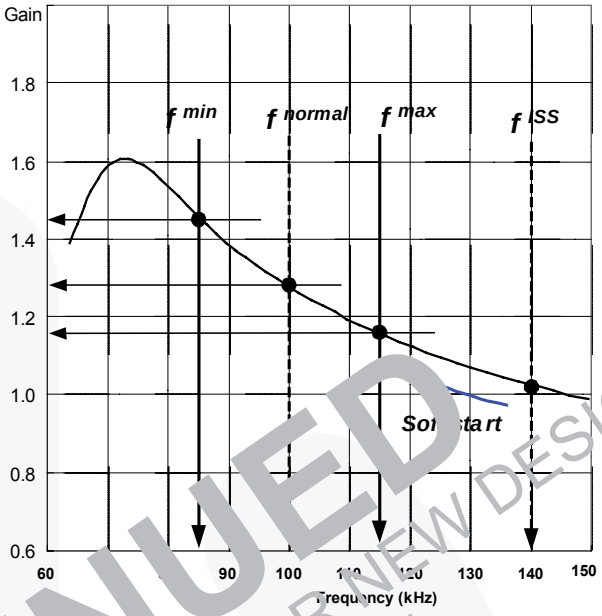

Figure 18. Resonant Converter Typical Gain Curve

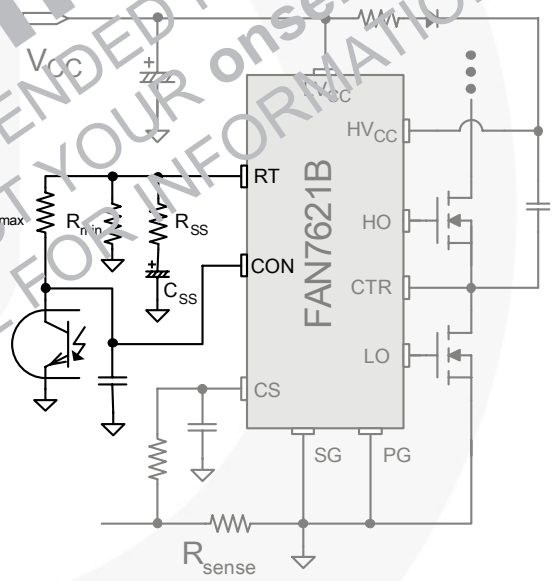

Figure 19. Frequency Control Circuit

The minimum switching frequency is determined as:

$$f^{\min} = \frac{5.2k\Omega}{R_{\min}} \times 100(kHz) \quad (1)$$

Assuming the saturation voltage of opto-coupler transistor is 0.2V, the maximum switching frequency is determined as:

$$f^{\max} = \left(\frac{5.2k\Omega}{R_{\min}} + \frac{4.68k\Omega}{R_{\max}}\right) \times 100(kHz) \quad (2)$$

To prevent excessive inrush current and overshoot of output voltage during startup, increase the voltage gain of the resonant converter progressively. Since the voltage gain of the resonant converter is inversely

DISCONTINUED
THIS DEVICE IS NOT RECOMMENDED FOR NEW DESIGN
PLEASE CONTACT YOUR onsemi REPRESENTATIVE FOR INFORMATION

proportional to the switching frequency, the soft-start is implemented by sweeping down the switching frequency from an initial high frequency (f^{ISS}) until the output voltage is established. The soft-start circuit is made by connecting R-C series network on the R_T pin, as shown in Figure 19. FAN7621B also has an internal soft-start for 3ms to reduce the current overshoot during the initial cycles, which adds 40kHz to the initial frequency of the external soft-start circuit, as shown in Figure 20. The initial frequency of the soft-start is given as:

$$f^{ISS} = \left(\frac{5.2k\Omega}{R_{\min}} + \frac{5.2k\Omega}{R_{SS}}\right) \times 100 + 40\ (kHz) \quad (3)$$

It is typical to set the initial (soft-start) frequency of two ~ three times the resonant frequency (f_O) of the resonant network.

The soft-start time is three to four times the RC time constant. The RC time constant is as follows:

$$T_{SS} = R_{SS} \cdot C_{SS} \quad (4)$$

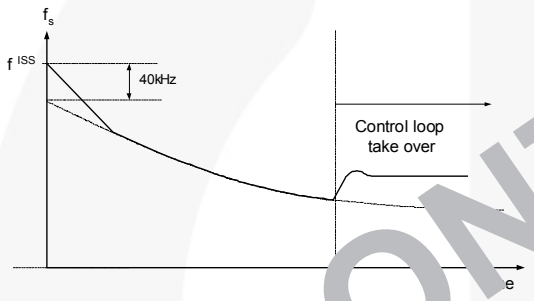

Figure 20. Frequency Sweeping of Soft-Start

4. Control Pin: The FAN7621B has a control pin for protection, cycle skipping and remote on/off. Figure 21 shows the internal block diagram for control pin.

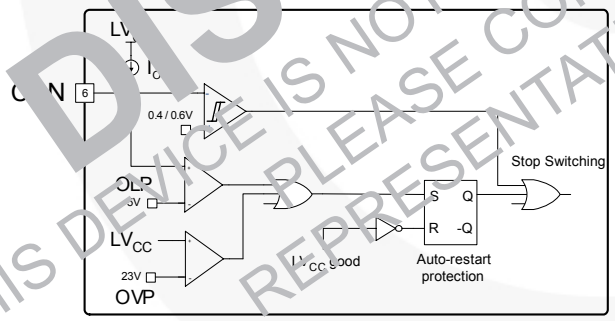

Figure 21. Internal Block of Control Pin

Protection: When the control pin voltage exceeds 5V, protection is triggered. Detailed applications are described in the protection section.

Pulse Skipping: FAN7621B stops switching when the control pin voltage drops below 0.4V and resumes switching when the control pin voltage rises above 0.6V. To use pulse-skipping, the control pin should be connected to the opto-coupler collector pin. The frequency that causes pulse skipping is given as:

$$f^{SKIP} = \left(\frac{5.2k\Omega}{R_{\min}} + \frac{4.16k\Omega}{R_{\max}}\right) x100(kHz) \quad (5)$$

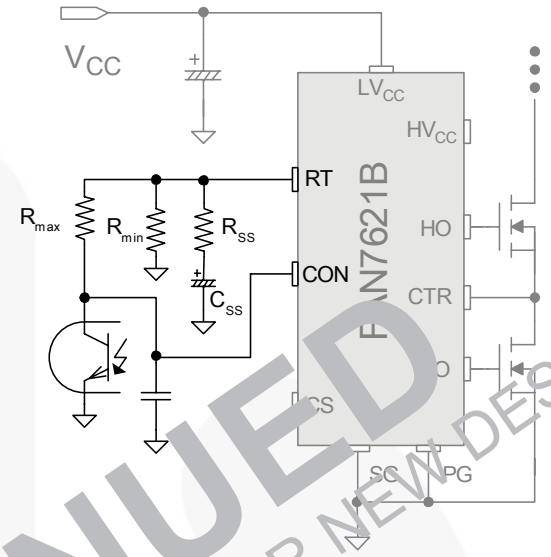

Figure 22. Control Pin Configuration for Pulse Skipping

Remote On / Off: When an auxiliary power supply is used for standby, the main power stage using FAN7621B can be shut down by pulling down the control pin voltage, as shown in Figure 23. R1 and C1 are used to ensure soft-start when switching resumes.

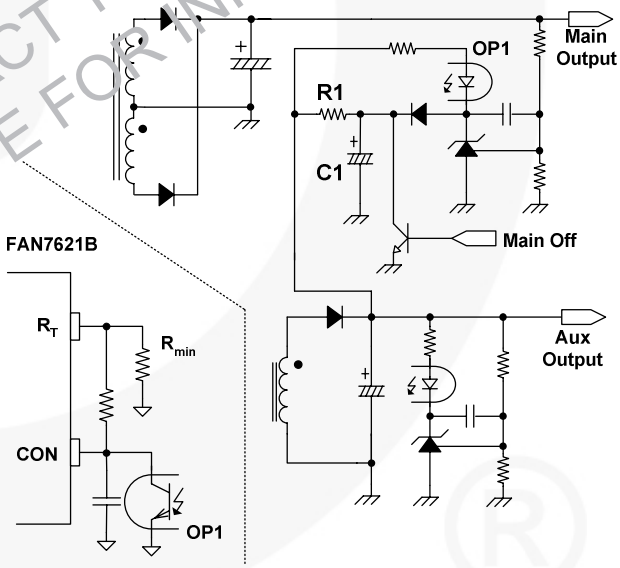

Figure 23. Remote On / Off Circuit

5. Protection Circuits: The FAN7621B has several self-protective functions, such as Overload Protection (OLP), Over-Current Protection (OCP), Abnormal Over-Current Protection (AOCP), Over-Voltage Protection (OVP), and Thermal Shutdown (TSD). OLP, OCP, and OVP are auto-restart mode protections; while AOCP and TSD are latch-mode protections, as shown in Figure 24.

DISCONTINUED
THIS DEVICE IS NOT RECOMMENDED FOR NEW DESIGN
PLEASE CONTACT YOUR onsemi
REPRESENTATIVE FOR INFORMATION

Auto-Restart Mode Protection: Once a fault condition is detected, switching is terminated and the MOSFETs remain off. When LV_{CC} falls to the LV_{CC} stop voltage of 10.0V, the protection is reset. FAN7621B resumes normal operation when LV_{CC} reaches the start voltage of 12.5V.

Latch-Mode Protection: Once this protection is triggered, switching is terminated and the gate output signals remain off. The latch is reset only when LV_{CC} is discharged below 5V.

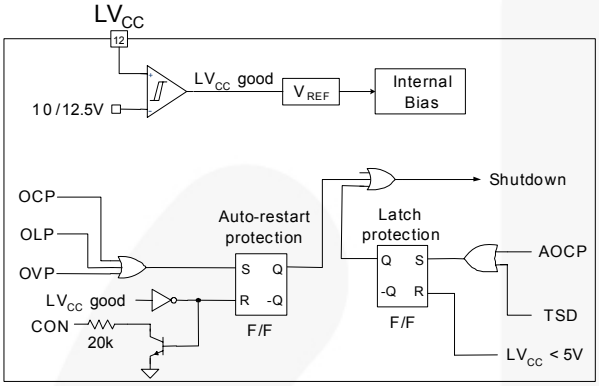

Figure 24. Protection Blocks

Current Sensing Using Resistor: FAN7621B senses drain current as a negative voltage, as shown in Figure 25 and Figure 26. Half-wave sensing allows low power dissipation in the sensing resistor, while full-wave sensing has less switching noise in the sensing signal.

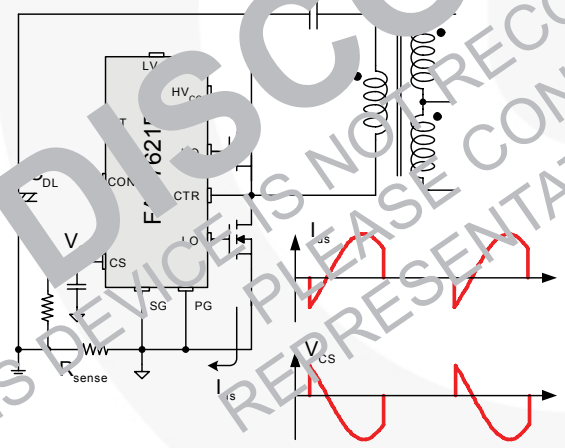

Figure 25. Half-Wave Sensing

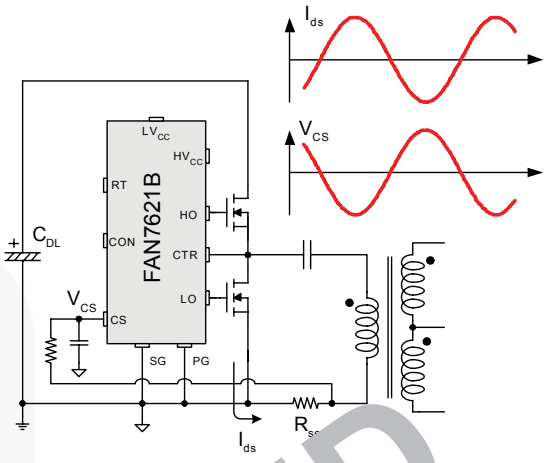

Figure 26. Full-Wave Sensing

Current Sensing Using Resonant Capacitor Voltage: For high-power applications, current sensing using a resistor may not be available due to the severe power dissipation in the resistor. In that case, indirect current sensing using the resonant capacitor voltage can be a good alternative because the amplitude of the resonant capacitor voltage (V_{Cr}^{p-p}) is proportional to the resonant current in the primary side (I_p^{p-p}) as:

$$V_{Cr}^{p-p} = \frac{I_p^{p-p}}{2\pi f_s C_r} \quad (6)$$

DISCONTINUED
THIS DEVICE IS NOT RECOMMENDED FOR NEW DESIGN
PLEASE CONTACT YOUR onsemi
REPRESENTATIVE FOR INFORMATION

To minimize power dissipation, a capacitive voltage divider is generally used for capacitor voltage sensing, as shown in Figure 27.

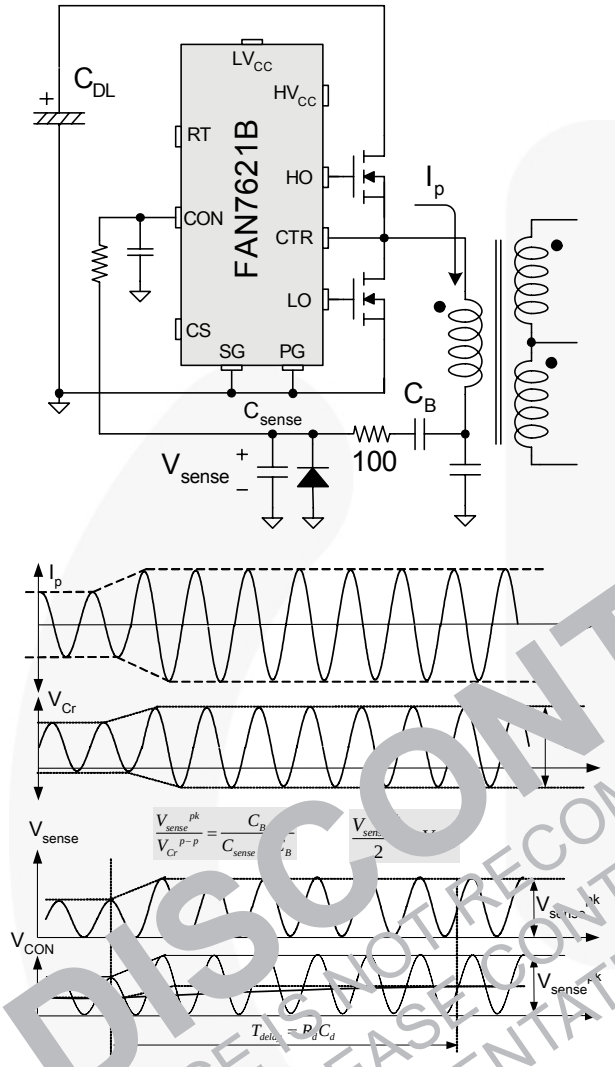

Figure 27. Current Sensing Using Resonant Capacitor Voltage

5.1 Over-Current Protection (OCP): When the sensing pin voltage drops below -0.6V, OCP is triggered and the MOSFETs remain off. This protection has a shutdown time delay of 1.5μs to prevent premature shutdown during startup.

5.2 Abnormal Over-Current Protection: **(AOCP)**: If the secondary rectifier diodes are shorted, large current with extremely high di/dt can flow through the MOSFET before OCP or OLP is triggered. AOCP is triggered without shutdown delay when the sensing pin voltage drops below -0.9V. This protection is latch mode and reset when LV_{CC} is pulled down below 5V.

5.3 Overload Protection (OLP): Overload is defined as the load current exceeding its normal level due to an unexpected abnormal event. In this situation, the protection circuit should trigger to protect the power supply. However, even when the power supply is in the normal condition, the overload situation can occur during the load transition. To avoid premature triggering of protection, the overload protection circuit should be designed to trigger only after a specified time to determine whether it is a transient situation or a true overload situation. Figure 27 shows a typical overload protection circuit. By sensing the resonant capacitor voltage on the control pin, the overload protection can be implemented. Using RC time constant, shutdown delay can be adjusted. The voltage obtained on the control pin is given as:

$$V_{CON} = \frac{C_B}{2(C_B + C_{sense})} V_{Cr}^{p-p} \quad (7)$$

where V_{Cr}^{p-p} is the amplitude of the resonant capacitor voltage.

5.4 Over-Voltage Protection: **(OVP)**: When the LV_{CC} reaches 23V, OVP is triggered. This protection is used when auxiliary winding of the transformer to supply V_{CC} to the controller is utilized.

5.5 Thermal Shutdown (TSD): If the temperature of the junction exceeds approximately 130°C, the thermal shutdown triggers.

DISCONTINUED
THIS DEVICE IS NOT RECOMMENDED FOR NEW DESIGN
PLEASE CONTACT YOUR onsemi
REPRESENTATIVE FOR INFORMATION

6. PCB Layout Guideline: Duty imbalance problems may occur due to the radiated noise from main transformer, the inequality of the secondary-side leakage inductances of main transformer, and so on. Among them, it is one of the dominant reasons that the control components in the vicinity of R_T pin are enclosed by the primary current flow pattern on PCB layout. The direction of the magnetic field on the components caused by the primary current flow is changed when the high-and-low side MOSFET turns on by turns. The magnetic fields with opposite direction from each other induce a current through, into, or out of the R_T pin, which makes the turn-on duration of each MOSFET different. It is strongly recommended to separate the control components in the vicinity of R_T pin from the primary current flow pattern on PCB layout. Figure 28 shows an example for the duty-balanced case. The yellow and blue lines show the primary current flows when the lower-side and higher-side MOSFETs turns on, respectively. The primary current does not enclose any component of controller.

In addition, it is helpful to reduce the duty imbalance to make the loop configured between CON pin and opto-coupler as small as possible, as shown in the red line in Figure 28.

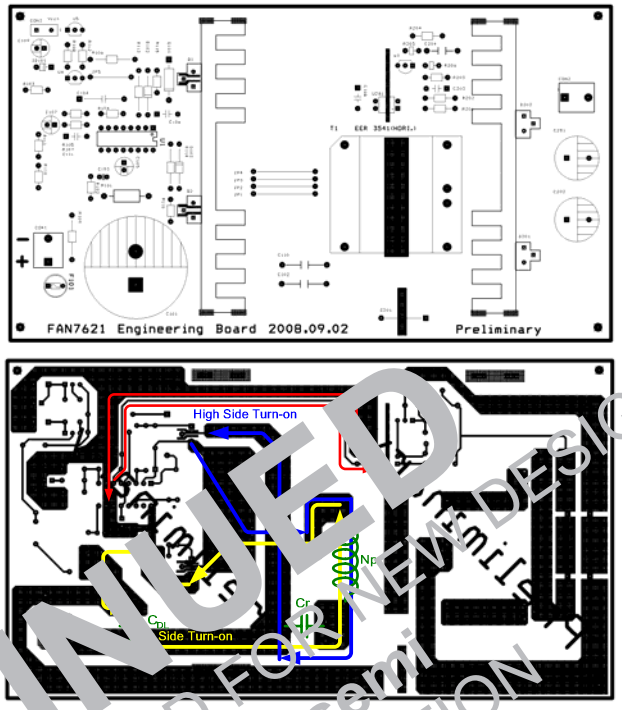

Figure 28. Example for Duty Balancing

DISCONTINUED
THIS DEVICE IS NOT RECOMMENDED FOR NEW DESIGN
PLEASE CONTACT YOUR onsemi
REPRESENTATIVE FOR INFORMATION

Typical Application Circuit (Half-Bridge LLC Resonant Converter)

Application	Device	Input Voltage Range	Rated Output Power	Output Voltage (Rated Current)
LCD TV	FAN7621B	$390V_{DC}$ ($340\sim400V_{DC}$)	192W	24V-8A

Features

- High efficiency (>94% at $400V_{DC}$ input)
- Reduced EMI noise through zero-voltage-switching (ZVS)
- Enhanced system reliability with various protection functions

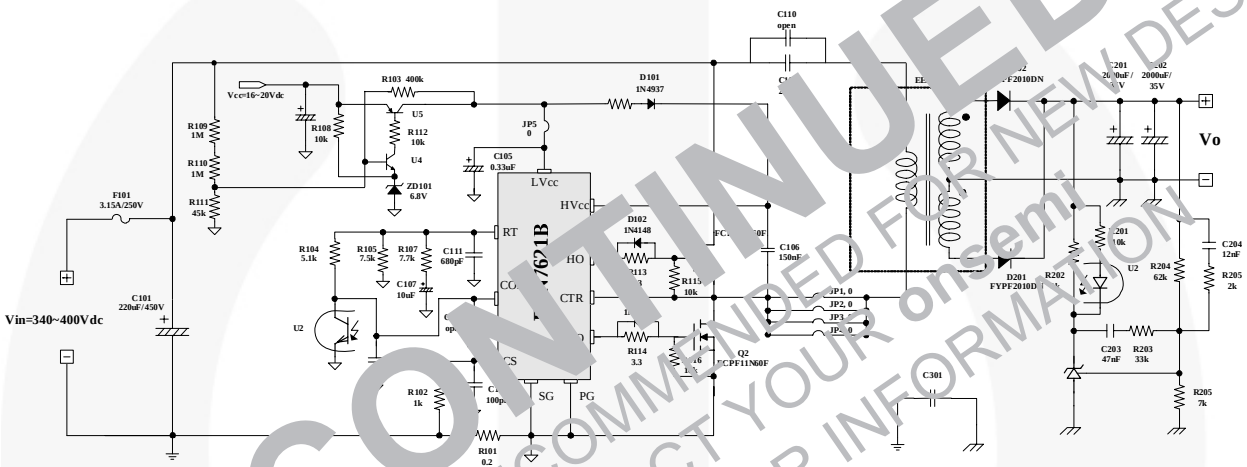

Figure 29. Typical Application Circuit

DISCONTINUED
THIS DEVICE IS NOT RECOMMENDED FOR NEW DESIGN
PLEASE CONTACT YOUR onsemi
REPRESENTATIVE FOR INFORMATION

Typical Application Circuit (Continued)

Usually, LLC resonant converters require large leakage inductance value. To obtain a large leakage inductance, sectional winding method is used.

- Core: EC35 (Ae=106 mm^2)
- Bobbin: EC35 (Horizontal)
- Transformer Model Number: SNX-2468-1

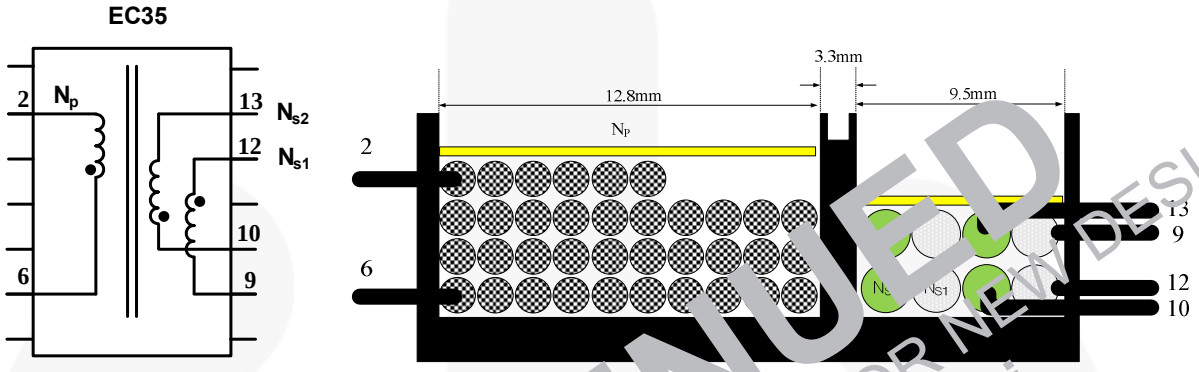

Figure 30. Transformer Construction

	Pins (S → F)	Wire	Turns	Note
N_p	6 → 2	0.08φ×88 (Litz Wire)	36	
N_{s1}	12 → 9	0.08φ×234 (Litz Wire)	4	Bifilar Winding
N_{s2}	10 → 1	0.08φ×234 (Litz Wire)	4	Bifilar Winding

	Pins	Specifications	Remark
Primary-side Inductance (L_p)	2 – 6	550μH ± 10%	100kHz, 1V
Primary-side Effective Leakage (L_r)	2 – 6	110μH ± 10%	Short one of the secondary windings

For more detailed information regarding the transformer, visit http://www.santronics-usa.com/documents.html or contact sales@santronics-usa.com or +1-408-734-1878 (Sunnyvale, California USA).

DISCONTINUED
THIS DEVICE IS NOT RECOMMENDED FOR NEW DESIGN
PLEASE CONTACT YOUR onsemi
REPRESENTATIVE FOR INFORMATION

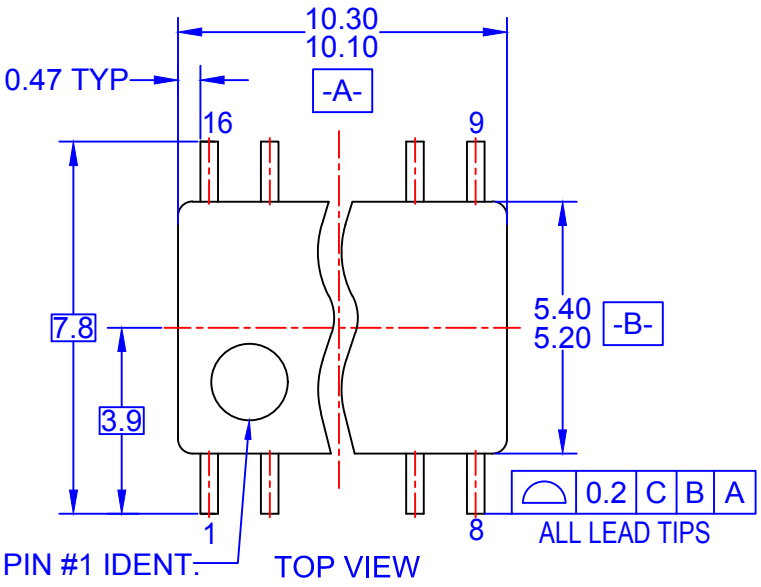

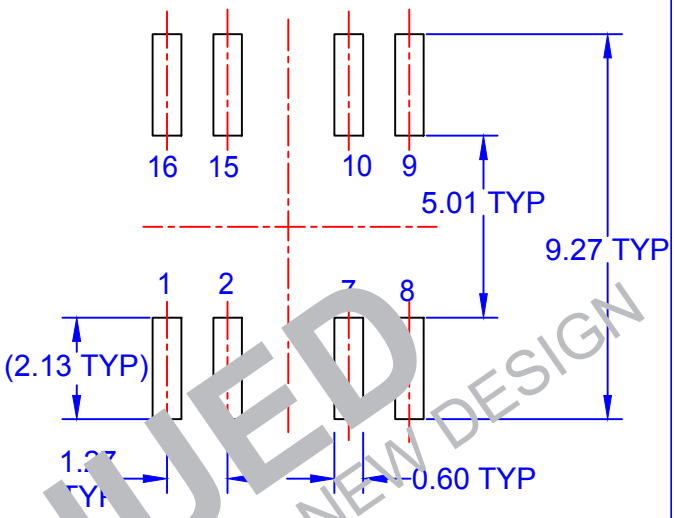

LAND PATTERN RECOMMENDATION

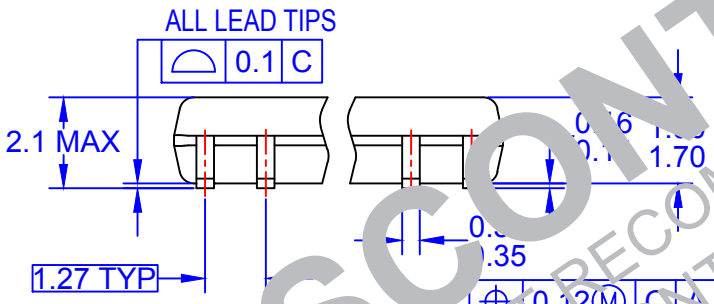

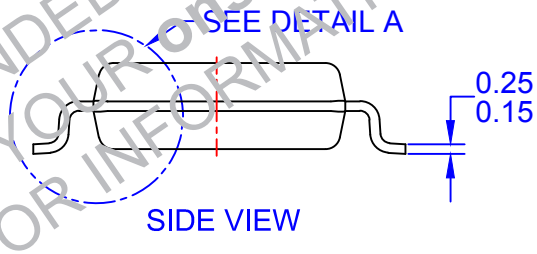

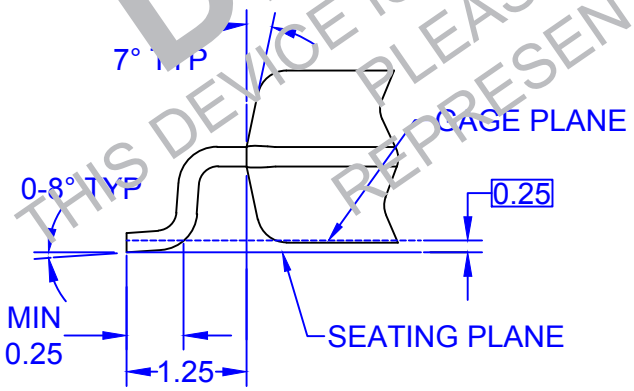

DETAIL A

NOTES:

A. CONFORMS TO EIAJ EDR-7320 REGISTRATION, ESTABLISHED IN DECEMBER, 1998.
B. DIMENSIONS ARE IN MILLIMETERS.
C. DIMENSIONS ARE EXCLUSIVE OF BURRS, MOLD FLASH, AND TIE BAR EXTRUSIONS.
D. DRAWING FILENAME: MKT-M16Drev5

FAIRCHILD ™

DISCONTINUED
THIS DEVICE IS NOT RECOMMENDED FOR NEW DESIGN
PLEASE CONTACT YOUR onsemi
REPRESENTATIVE FOR INFORMATION

DISCONTINUED
THIS DEVICE IS NOT RECOMMENDED FOR NEW DESIGN
PLEASE CONTACT YOUR onsemi
REPRESENTATIVE FOR INFORMATION

ON Semiconductor and ON are trademarks of Semiconductor Components Industries, LLC dba ON Semiconductor or its subsidiaries in the United States and/or other countries. ON Semiconductor owns the rights to a number of patents, trademarks, copyrights, trade secrets, and other intellectual property. A listing of ON Semiconductor's product/patent coverage may be accessed at www.onsemi.com/site/pdf/Patent−Marking.pdf. ON Semiconductor reserves the right to make changes without further notice to any products herein. ON Semiconductor makes no warranty, representation or guarantee regarding the suitability of its products for any particular purpose, nor does ON Semiconductor assume any liability arising out of the application or use of any product or circuit, and specifically disclaims any and all liability, including without limitation special, consequential or incidental damages. Buyer is responsible for its products and applications using ON Semiconductor products, including compliance with all laws, regulations and safety requirements or standards, regardless of any support or applications information provided by ON Semiconductor. "Typical" parameters which may be provided in ON Semiconductor data sheets and/or specifications can and do vary in different applications and actual performance may vary over time. All operating parameters, including "Typicals" must be validated for each customer application by customer's technical experts. ON Semiconductor does not convey any license under its patent rights nor the rights of others. ON Semiconductor products are not designed, intended, or authorized for use as a critical component in life support systems or any FDA Class 3 medical devices or medical devices with a same or similar classification in a foreign jurisdiction or any devices intended for implantation in the human body. Should Buyer purchase or use ON Semiconductor products for any such unintended or unauthorized application, Buyer shall indemnify and hold ON Semiconductor and its officers, employees, subsidiaries, affiliates, and distributors harmless against all claims, costs, damages, and expenses, and reasonable attorney fees arising out of, directly or indirectly, any claim of personal injury or death associated with such unintended or unauthorized use, even if such claim alleges that ON Semiconductor was negligent regarding the design or manufacture of the part. ON Semiconductor is an Equal Opportunity/Affirmative Action Employer. This literature is subject to all applicable copyright laws and is not for resale in any manner.

PUBLICATION ORDERING INFORMATION

LITERATURE FULFILLMENT:
Literature Distribution Center for ON Semiconductor
19521 E. 32nd Pkwy, Aurora, Colorado 80011 USA
Phone: 303−675−2175 or 800−344−3860 Toll Free USA/Canada
Fax: 303−675−2176 or 800−344−3867 Toll Free USA/Canada
Email: orderlit@onsemi.com

N. American Technical Support: 800−282−9855 Toll Free USA/Canada
Europe, Middle East and Africa Technical Support:
Phone: 421 33 790 2910
Japan Customer Focus Center
Phone: 81−3−5817−1050

ON Semiconductor Website: **www.onsemi.com**

Order Literature: http://www.onsemi.com/orderlit

For additional information, please contact your local Sales Representative

ENTEGRECİ

Bu belge www.entegreci.com üzerinden sunulmaktadır.

Elektronik komponent tedarikinde Entegreci

Entegreci, Eskişehir merkezli, Türkiye geneline satış yapan bir elektronik komponent mağazasıdır. Entegreler (IC), mikrodenetleyiciler, transistörler, diyotlar, pasif elemanlar, konnektörler, modüller ve geliştirme kartları tek adetten seri üretim adetlerine kadar satılır. Ürün sayfalarında güncel stok durumunu, fiyatı ve datasheet bağlantısını bulabilirsiniz.

Parça koduyla arama

Üretici parça numarasını yazın; stok ve fiyatı hemen görün.

www.entegreci.com

Ürün kategorileri

Entegreden kapasitöre tüm elektronik komponent kategorileri.

Kategorilere göz atın

Üreticiler

Aradığınız üreticinin ürünlerini tek sayfada inceleyin.

Üreticileri görün

Toplu alım ve teklif

Listede olmayan ya da yüksek adetli parçalar için teklif isteyin.

Teklif isteyin

www.entegreci.com | **destek@entegreci.com** | **0850 305 90 34**

Entegreci is an online electronic components store based in Türkiye. Search by manufacturer part number to see stock, prices and datasheets for integrated circuits, microcontrollers, transistors, passive components and connectors, or request a quote for parts that are not listed.

Bu sayfa Entegreci tarafından eklenmiştir. Belgenin önceki sayfaları asıl yayıncısına aittir ve içeriği değiştirilmemiştir; en güncel sürüm için belgenin yayıncısına başvurun.