

Is Now Part of



ON Semiconductor®

To learn more about ON Semiconductor, please visit our website at
www.onsemi.com

Please note: As part of the Fairchild Semiconductor integration, some of the Fairchild orderable part numbers will need to change in order to meet ON Semiconductor's system requirements. Since the ON Semiconductor product management systems do not have the ability to manage part nomenclature that utilizes an underscore (_), the underscore (_) in the Fairchild part numbers will be changed to a dash (-). This document may contain device numbers with an underscore (_). Please check the ON Semiconductor website to verify the updated device numbers. The most current and up-to-date ordering information can be found at www.onsemi.com. Please email any questions regarding the system integration to Fairchild_questions@onsemi.com.

ON Semiconductor and the ON Semiconductor logo are trademarks of Semiconductor Components Industries, LLC dba ON Semiconductor or its subsidiaries in the United States and/or other countries. ON Semiconductor owns the rights to a number of patents, trademarks, copyrights, trade secrets, and other intellectual property. A listing of ON Semiconductor's product/patent coverage may be accessed at www.onsemi.com/site/pdf/Patent-Marking.pdf. ON Semiconductor reserves the right to make changes without further notice to any products herein. ON Semiconductor makes no warranty, representation or guarantee regarding the suitability of its products for any particular purpose, nor does ON Semiconductor assume any liability arising out of the application or use of any product or circuit, and specifically disclaims any and all liability, including without limitation special, consequential or incidental damages. Buyer is responsible for its products and applications using ON Semiconductor products, including compliance with all laws, regulations and safety requirements or standards, regardless of any support or applications information provided by ON Semiconductor. "Typical" parameters which may be provided in ON Semiconductor data sheets and/or specifications can and do vary in different applications and actual performance may vary over time. All operating parameters, including "Typicals" must be validated for each customer application by customer's technical experts. ON Semiconductor does not convey any license under its patent rights nor the rights of others. ON Semiconductor products are not designed, intended, or authorized for use as a critical component in life support systems or any FDA Class 3 medical devices or medical devices with a same or similar classification in a foreign jurisdiction or any devices intended for implantation in the human body. Should Buyer purchase or use ON Semiconductor products for any such unintended or unauthorized application, Buyer shall indemnify and hold ON Semiconductor and its officers, employees, subsidiaries, affiliates, and distributors harmless against all claims, costs, damages, and expenses, and reasonable attorney fees arising out of, directly or indirectly, any claim of personal injury or death associated with such unintended or unauthorized use, even if such claim alleges that ON Semiconductor was negligent regarding the design or manufacture of the part. ON Semiconductor is an Equal Opportunity/Affirmative Action Employer. This literature is subject to all applicable copyright laws and is not for resale in any manner.

FAIRCHILD SEMICONDUCTOR®

November 2013

FAN7602C
Green Current Mode PWM Controller

Features

- Green Current Mode PWM Controller
- Random Frequency Fluctuation for Low EMI
- Internal High-Voltage Startup Switch
- Burst Mode Operation
- Line Voltage Feedforward to Limit Maximum Power
- Line Under-Voltage Protection
- Latch Protection & Internal Soft-Start (10ms) Function
- Overload Protection (OLP)
- Over-Voltage Protection (OVP)
- Over-Temperature Protection (OTP)
- Low Operation Current: 1 mA Typical
- Available in the 8-Lead SOP Package

Applications

- Adapter
- LCD Monitor Power
- Auxiliary Power Supply

Related Resources

- *AN-6014- Green Current Mode PWM Controller (Except for frequency fluctuation part in AN-6014)*

Description

The FAN7602C is a green current-mode PWM controller. It is specially designed for off-line adapter applications; DVDP, VCR, LCD monitor applications; and auxiliary power supplies.

The internal high-voltage startup switch and the burst mode operation reduce the power loss in standby mode. As a result, the input power is lower than 1 W when the input line voltage is 265 V_{AC} and the load is 0.5 W. At no-load condition, input power is under 0.15 W.

The maximum power can be limited constantly, regardless of the line voltage change, using the power limit function.

The switching frequency is not fixed and has random frequency fluctuation.

The FAN7602C includes various protections for the system reliability and the internal soft-start prevents the output voltage over-shoot at startup.

Ordering Information

Part Number	Operating Junction Temperature	Package	Packing Method	Top Mark
FAN7602CMX	-40°C to +150°C	8-Lead Small Outline Package (SOP)	Tape and Reel	FAN7602C

© 2009 Fairchild Semiconductor Corporation

Typical Application Diagram

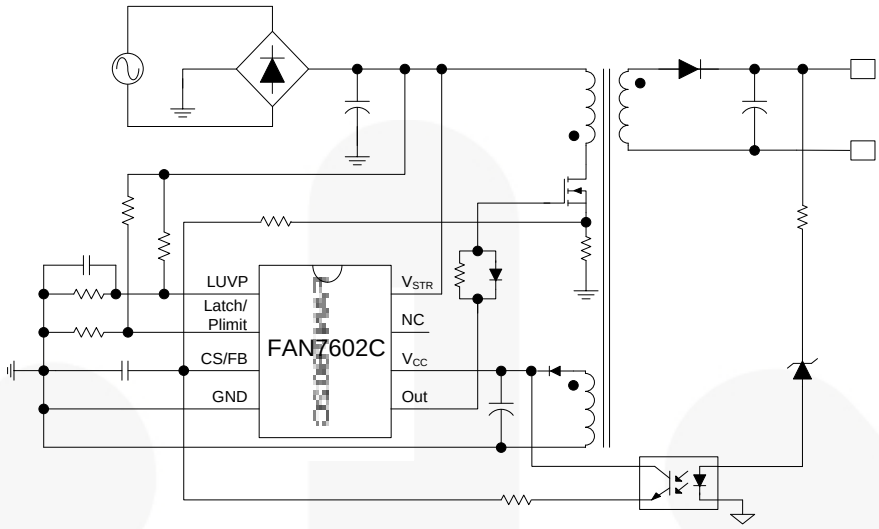

Figure 1. Typical Flyback Application

Internal Block Diagram

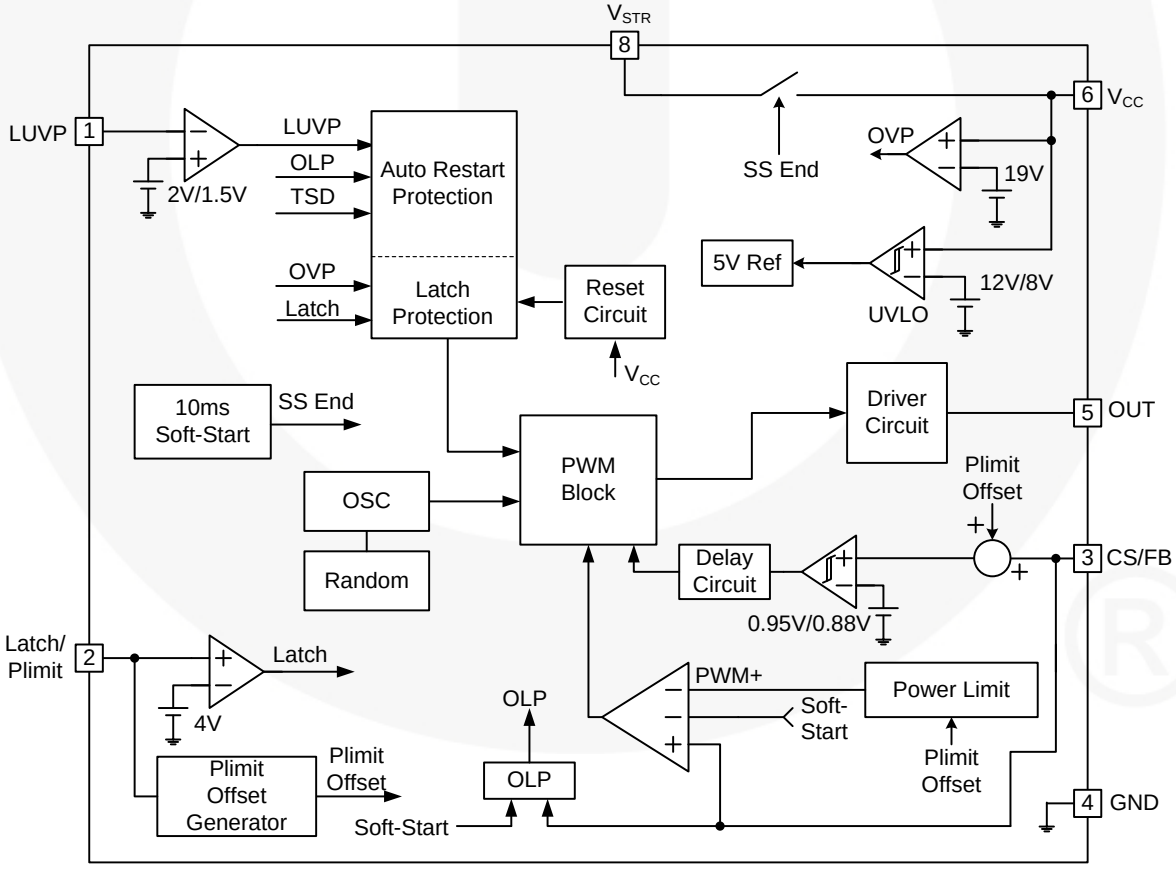

Figure 2. Functional Block Diagram

Pin Configuration

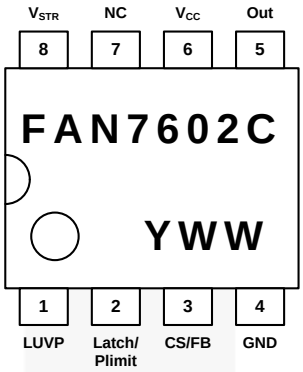

Figure 3. Pin Configuration (Top View)

Pin Definitions

Pin #	Name	Description
1	LUVP	**Line Under-Voltage Protection Pin**. This pin is used to protect the set when the input voltage is lower than the rated input voltage range.
2	Latch/Plimit	**Latch Protection and Power Limit Pin**. When the pin voltage exceeds 4 V, the latch protection works. The latch protection is reset when the V_{CC} voltage is lower than 5 V. For the power limit function, the OCP level decreases as the pin voltage increases.
3	CS/FB	**Current Sense and Feedback Pin**. This pin is used to sense the MOSFET current for the current mode PWM and OCP. The output voltage feedback information and the current sense information are added using an external RC filter.
4	GND	**Ground Pin**. This pin is used for the ground potential of all the pins. For proper operation, the signal ground and the power ground should be separated.
5	OUT	**Gate Drive Output Pin**. This pin is an output pin to drive an external MOSFET. The peak sourcing current is 450 mA and the peak sinking current is 600 mA. For proper operation, the stray inductance in the gate driving path must be minimized.
6	V_{CC}	**Supply Voltage Pin**. IC operating current and MOSFET driving current are supplied using this pin.
7	NC	**No Connection**.
8	V_{STR}	**Startup Pin**. This pin is used to supply IC operating current during IC startup. After startup, the internal JFET is turned off to reduce power loss.

© 2009 Fairchild Semiconductor Corporation

Absolute Maximum Ratings

Stresses exceeding the absolute maximum ratings may damage the device. The device may not function or be operable above the recommended operating conditions and stressing the parts to these levels is not recommended. In addition, extended exposure to stresses above the recommended operating conditions may affect device reliability. The absolute maximum ratings are stress ratings only.

Symbol	Parameter		Min.	Max.	Unit
V_{CC}	Supply Voltage			25	V
I_O	Output Current		-600	+450	mA
$V_{CS/FB}$	CS/FB Input Voltage		-0.3	20.0	V
V_{LUVP}	LUVP Input Voltage		-0.3	10.0	V
V_{Latch}	Latch/Plimit Input Voltage		-0.3	10.0	V
V_{STR}	V_{STR} Input Voltage			600	V
T_J	Junction Temperature			+150	°C
	Recommended Operating Junction Temperature		-40	+150	
T_{STG}	Storage Temperature Range		-55	+150	°C
P_D	Power Dissipation			1.2	W
ESD	Electrostatic Discharge Capability	Human Body Model, JESD22-A114		3500	V
		Charged Device Model, JESD22-C101		2000	

Thermal Impedance

Symbol	Parameter	Value	Unit
θ_{JA}	Thermal Resistance[1], Junction-to-Ambient	150	°C/W

Note:

1. Regarding the test environment and PCB type, please refer to JESD51-2 and JESD51-10.

© 2009 Fairchild Semiconductor Corporation

Electrical Characteristics

V_{CC} = 14V, T_A = -25°C~125°C, unless otherwise specified.

Symbol	Parameter	Condition	Min.	Typ.	Max.	Unit
Startup Section						
I_{STR}	V_{STR} Startup Current	V_{STR} = 30 V, T_A = 25°C	0.7	1.0	1.4	mA
Under Voltage Lock Out Section						
V_{th_start}	Start Threshold Voltage	V_{CC} Increasing	11	12	13	V
V_{th_stop}	Stop Threshold Voltage	V_{CC} Decreasing	7	8	9	V
$HY_{_UVLO}$	UVLO Hysteresis		3.6	4.0	4.4	V
Supply Current Section						
I_{ST}	Startup Supply Current	T_A = 25°C		250	320	µA
I_{CC}	Operating Supply Current	Output Not Switching		1.0	1.5	mA
Soft-Start Section						
t_{SS}	Soft-Start Time[2]		5	10	15	ms
PWM Section						
f_{OSC}	Operating Frequency	$V_{CS/FB}$ = 0.2 V, T_A = 25°C	59	65	73	kHz
Δf_{OSC}	Frequency Fluctuation[2]			±3		kHz
$V_{CS/FB1}$	CS/FB Threshold Voltage	T_A = 25°C	0.9	1.0	1.1	V
t_D	Propagation Delay to Output[2]			100	150	ns
D_{MAX}	Maximum Duty Cycle		70	75	80	%
D_{MIN}	Minimum Duty Cycle				0	%
Burst Mode Section						
$V_{CS/FB2}$	Burst On Threshold Voltage	T_A = 25°C	0.84	0.95	1.06	V
$V_{CS/FB3}$	Burst Off Threshold Voltage	T_A = 25°C	0.77	0.88	0.99	V
Power Limit Section						
K_{Plimit}	Offset Gain	$V_{Latch/Plimit}$ = 2 V, T_A = 25°C	0.12	0.16	0.20	
Output Section						
V_{OH}	Output Voltage High	T_A = 25°C, I_{source} = 100 mA	11.5	12.0	14.0	V
V_{OL}	Output Voltage Low	T_A = 25°C, I_{sink} = 100 mA		1.0	2.5	V
t_R	Rising Time[2]	T_A = 25°C, C_L = 1 nF		45	150	ns
t_F	Falling Time[2]	T_A = 25°C, C_L = 1 nF		35	150	ns

Continued on the following page…

© 2009 Fairchild Semiconductor Corporation

Electrical Characteristics (Continued)

V_{CC} = 14V, T_A = -25°C~125°C, unless otherwise specified.

Symbol	Parameter	Condition	Min.	Typ.	Max.	Unit
Protection Section						
V_{LATCH}	Latch Voltage		3.6	4.0	4.4	V
t_{OLP}	Overload Protection Time[2]		20	22	24	ms
t_{OLP_ST}	Overload Protection Time at Startup		30	37	44	ms
V_{OLP}	Overload Protection Level			0	0.1	V
$V_{LUVPoff}$	Line Under-Voltage Protection On to Off	T_A = 25°C	1.9	2.0	2.1	V
V_{LUVPon}	Line Under-Voltage Protection Off to On	T_A = 25°C	1.4	1.5	1.6	V
V_{OVP}	Over-Voltage Protection	T_A = 25°C	18	19	20	V
T_{SD}	Shutdown Temperature[2]			170		°C
HYS				60		°C

Note:

2. These parameters, although guaranteed, are not 100% tested in production.

© 2009 Fairchild Semiconductor Corporation

Typical Performance Characteristics

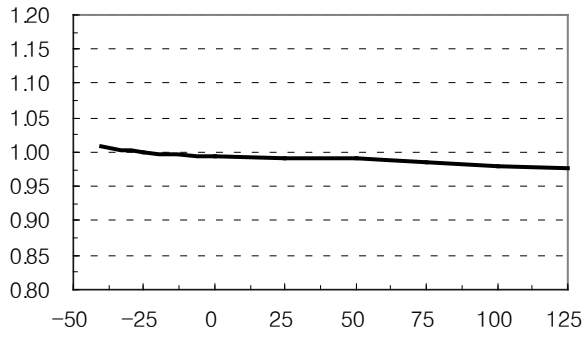

Figure 4. Start Threshold Voltage vs. Temperature

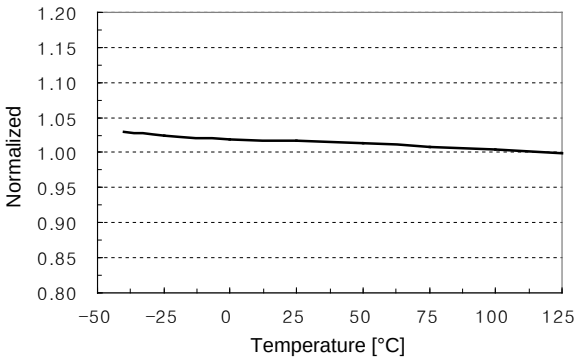

Figure 5. Stop Threshold Voltage vs. Temperature

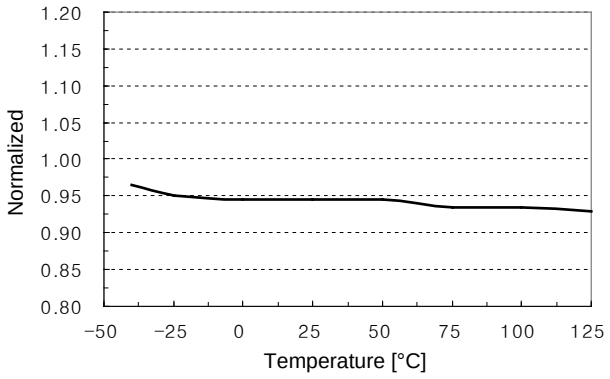

Figure 6. UVLO Hysteresis vs. Temperature

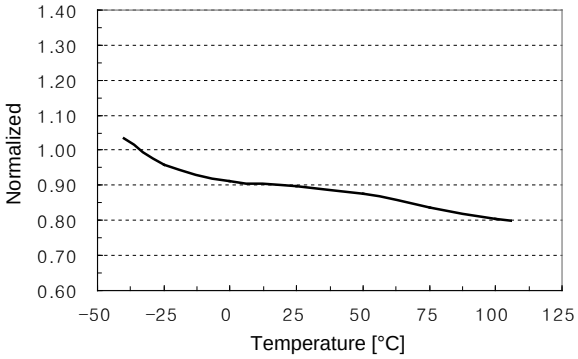

Figure 7. Startup Threshold Current vs. Temperature

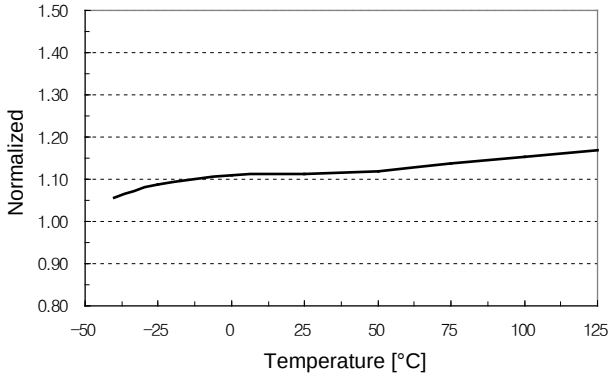

Figure 8. Operating Supply Current vs. Temperature

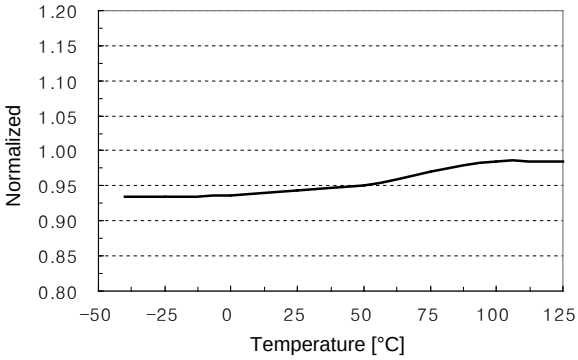

Figure 9. V_{STR} Startup Current vs. Temperature

Typical Performance Characteristics (Continued).

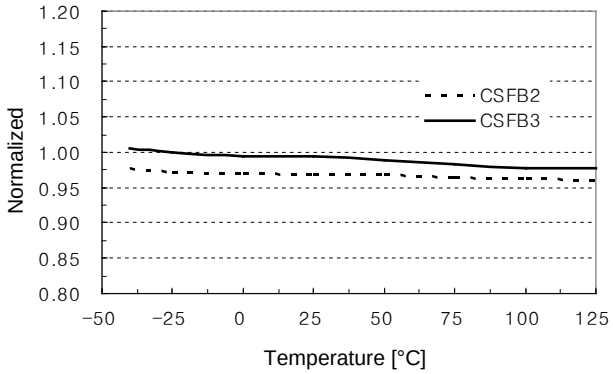

Figure 10. Burst On/Off Voltage vs. Temperature

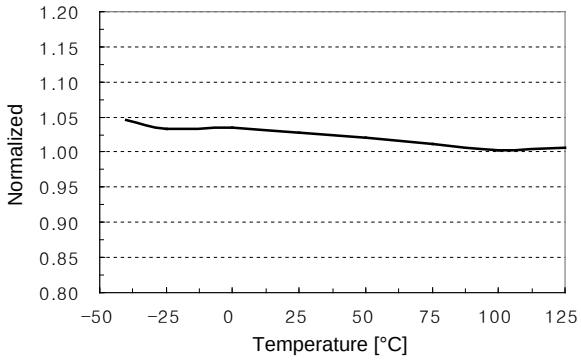

Figure 11. Operating Frequency vs. Temperature

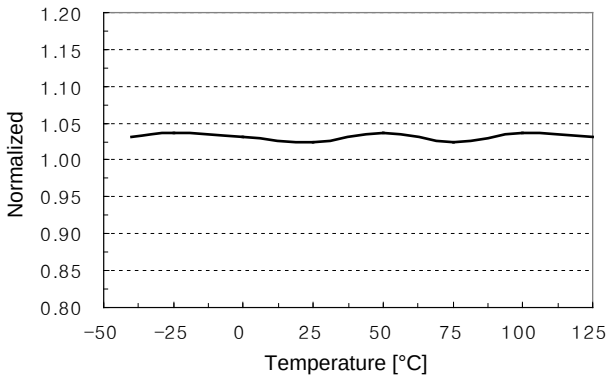

Figure 12. Offset Gain vs. Temperature

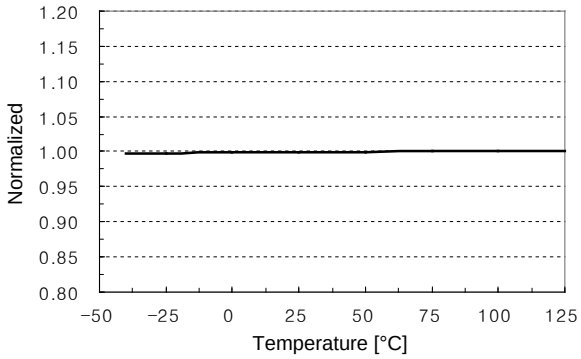

Figure 13. Maximum Duty Cycle vs. Temperature

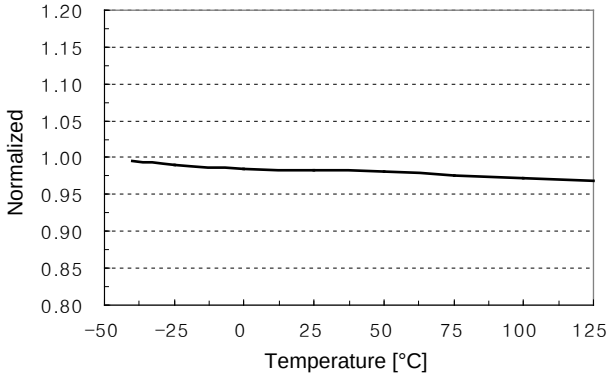

Figure 14. OVP Voltage vs. Temperature

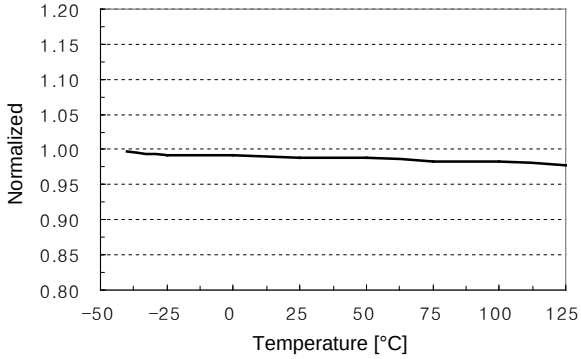

Figure 15. Latch Voltage vs. Temperature

Typical Performance Characteristics (Continued)

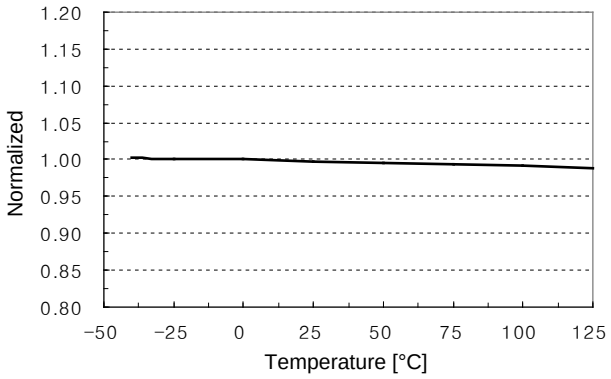

Figure 16. LUVP On-to-Off Voltage vs. Temperature

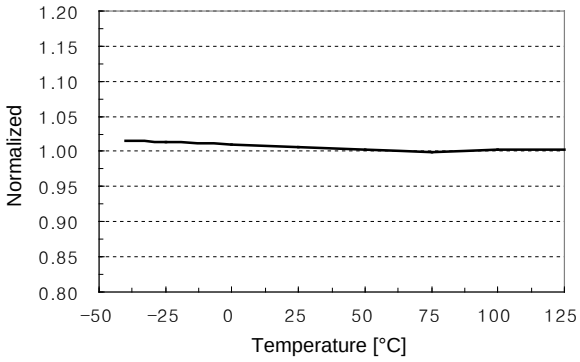

Figure 17. LUVP Off-to-On Voltage vs. Temperature

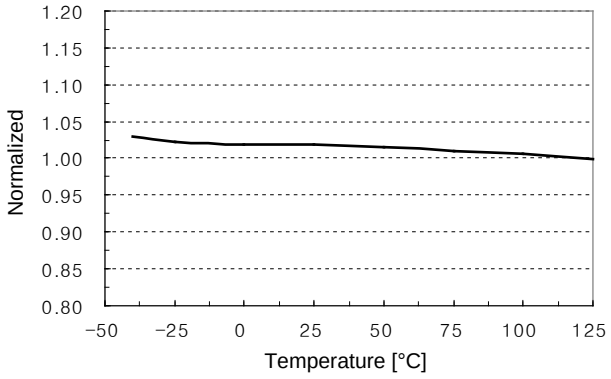

Figure 18. CS/FB Threshold Voltage vs. Temperature

Application Information

1. Startup Circuit and Soft-Start Block

The FAN7602C contains a startup switch to reduce the power loss of the external startup circuit of the conventional PWM converters. The internal startup circuit charges the V_{CC} capacitor with 0.9 mA current source if the AC line is connected. The startup switch is turned off 15 ms after IC starts up, as shown in Figure 19. The soft-start function starts when the V_{CC} voltage reaches the start threshold voltage of 12 V and ends when the internal soft-start voltage reaches 1 V. The internal startup circuit starts charging the V_{CC} capacitor again if the V_{CC} voltage is lowered to the minimum operating voltage, 8 V. The UVLO block shuts down the output drive circuit and some blocks to reduce the IC operating current and the internal soft-start voltage drops to zero. If the V_{CC} voltage reaches the start threshold voltage, the IC starts switching again and the soft-start block works as well.

During the soft-start, pulse-width modulated (PWM) comparator compares the CS/FB pin voltage with the soft-start voltage. The soft-start voltage starts from 0.5 V and the soft-start ends when it reaches 1 V and the soft-start time is 10 ms. The startup switch is turned off when the soft-start voltage reaches 1.3 V.

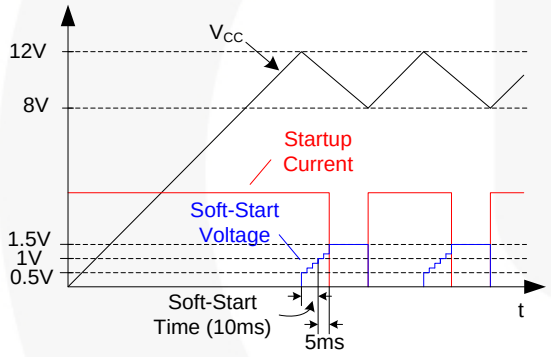

Figure 19. Startup Current and V_{CC} Voltage

2. Oscillator Block

The oscillator frequency is set internally and FAN7602C has a random frequency fluctuation function.

Fluctuation of the switching frequency of a switched power supply can reduce EMI by spreading the energy over a wider frequency range than the bandwidth measured by the EMI test equipment. The amount of EMI reduction is directly related to the range of the frequency variation. The range of frequency variation is fixed internally; however, its selection is randomly chosen by the combination of external feedback voltage and internal free-running oscillator. This randomly chosen switching frequency effectively spreads the EMI noise nearby switching frequency and allows the use of a cost-effective inductor instead of an AC input line filter to satisfy the world-wide EMI requirements.

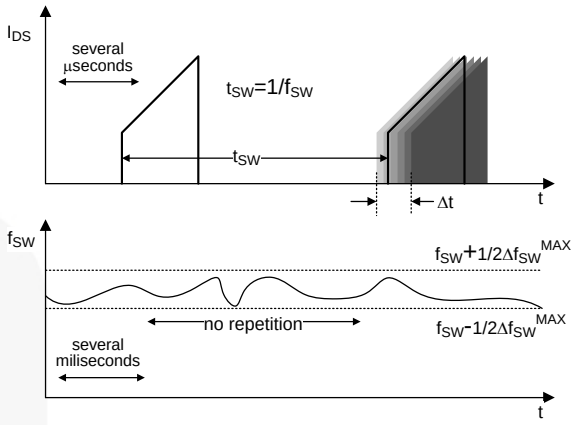

Figure 20. Frequency Fluctuation Waveform

3. Current Sense and Feedback Block

The FAN7602C performs the current sensing for the current mode PWM and the output voltage feedback with only one pin, pin 3. To achieve the two functions with one pin, an internal Leading-Edge Blanking (LEB) circuit to filter the current sense noise is not included because the external RC filter is necessary to add the output voltage feedback information and the current sense information.

Figure 21 shows the current sense and feedback circuits. R_S is the current sense resistor to sense the switch current. The current sense information is filtered by an RC filter composed of R_F and C_F. According to the output voltage feedback information, I_{FB} charges or stops charging C_F to adjust the offset voltage. If I_{FB} is zero, C_F is discharged through R_F and R_S to lower the offset voltage.

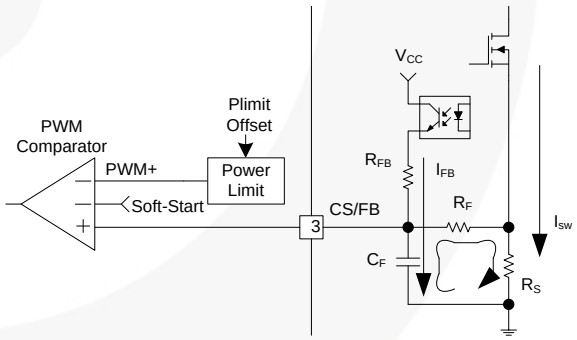

Figure 21. Current Sense and Feedback Circuits

Figure 22 shows typical voltage waveforms of the CS/FB pin. The current sense waveform is added to the offset voltage, as shown in the Figure 22. The CS/FB pin voltage is compared with PWM that is 1 V - Plimit offset. If the CS/FB voltage meets PWM+, the output drive is shut off. If the feedback offset voltage is LOW, the switch on-time is increased. If the feedback offset voltage is HIGH, the switch on-time is decreased. In this way, the duty cycle is controlled according to the output load condition. Generally, the maximum output power increases as input voltage increases because the current slope during switch on-time increases.

© 2009 Fairchild Semiconductor Corporation

To limit the output power of the converter constantly, the power limit function is included in FAN7602C. Sensing the converter input voltage through the Latch/Plimit pin, the Plimit offset voltage is subtracted from 1 V. As shown in Figure 22, the Plimit offset voltage is subtracted from 1 V and the switch on-time decreases as the Plimit offset voltage increases. If the converter input voltage increases, the switch on-time decreases, keeping the output power constant. The offset voltage is proportional to the Latch/Plimit pin voltage and the gain is 0.16. If the Latch/Plimit voltage is 1 V, the offset voltage is 0.16 V.

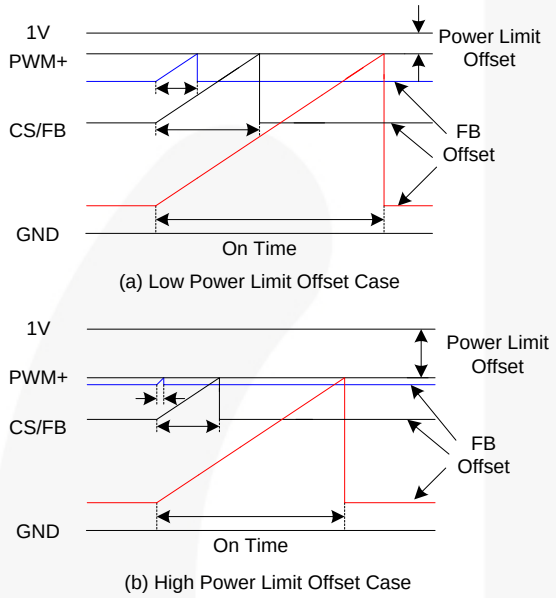

Figure 22. CS/FB Pin Voltage Waveforms

4. Burst-Mode Block

The FAN7602C contains the burst-mode block to reduce the power loss at a light-load and no load. A hysteresis comparator senses the offset voltage of the Burst+ for the burst mode, as shown in Figure 23. The Burst+ is the sum of the CS/FB voltage and Plimit offset voltage. The FAN7602C enters the burst mode when the offset voltage of the Burst+ is higher than 0.95 V and exits the burst mode when the offset voltage is lower than 0.88 V. The offset voltage is sensed during the switch off time.

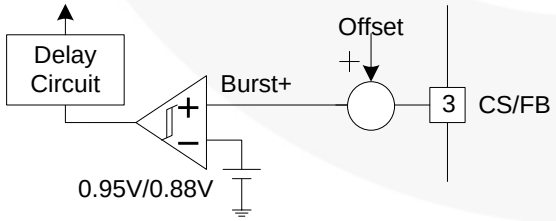

Figure 23. Burst-Mode Block

5. Protection Block

The FAN7602C contains several protection functions to improve system reliability.

5.1 Overload Protection (OLP)

The FAN7602C contains the overload protection function. If the output load is higher than the rated output current, the output voltage drops and the feedback error amplifier is saturated. The offset of the CS/FB voltage representing the feedback information is almost zero. As shown in Figure 24, the CS/FB voltage is compared with 50 mV reference when the internal clock signal is HIGH and, if the voltage is lower than 50 mV, the OLP timer starts counting. If the OLP condition persists for 22 ms, the timer generates the OLP signal. The protection is reset by the UVLO. The OLP block is enabled after the soft-start finishes.

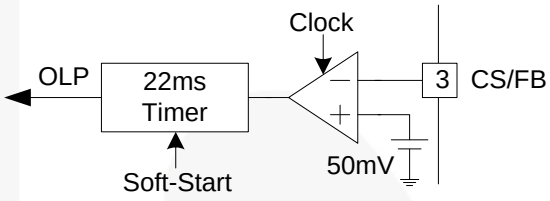

Figure 24. Overload Protection Circuit

5.2 Line Under-Voltage Protection

If the input voltage of the converter is lower than the minimum operating voltage, the converter input current increases too much, causing components failure. Therefore, if the input voltage is LOW, the converter should be protected. The LUVP circuit senses the input voltage using the LUVP pin and, if this voltage is lower than 2 V, the LUVP signal is generated. The comparator has 0.5 V hysteresis. If the LUVP signal is generated, the output drive block is shut down, the output voltage feedback loop is saturated, and the OLP works if the LUVP condition persists more than 22 ms.

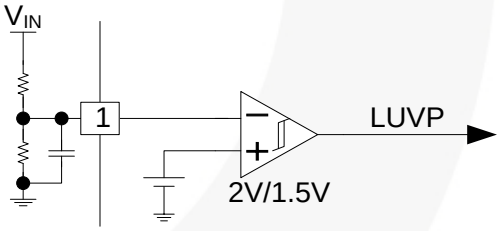

Figure 25. Line UVP Circuit

5.3 Latch Protection

The latch protection is provided to protect the system against abnormal conditions using the Latch/Plimit pin. The Latch/Plimit pin can be used for the output over-voltage protection and/or other protections. If the Latch/Plimit pin voltage is made higher than 4 V by an external circuit, the IC is shut down. The latch protection is reset when the V_{CC} voltage is lower than 5 V.

5.4 Over-Voltage Protection (OVP)

If the V_{CC} voltage reaches 19 V, the IC shuts down and the OVP protection is reset when the V_{CC} voltage is lower than 5 V.

© 2009 Fairchild Semiconductor Corporation

6. Output Drive Block

The FAN7602C contains a single totem-pole output stage to drive a power MOSFET. The drive output is capable of up to 450 mA sourcing current and 600 mA sinking current with typical rise and fall time of 45 ns and 35 ns, respectively, with a 1 nF load.

Typical Application Circuit

Application	Output Power	Input Voltage	Output Voltage
Adaptor	48 W	Universal Input (85 ~ 265 V_{AC})	12V

Features

- Low stand-by power (<0.15 W at 265 V_{AC})
- Constant output power control

Key Design Notes

- All the IC-related components should be placed close to IC, especially C107 and C110.
- If R106 value is too low, there can be subharmonic oscillation.
- R109 should be designed carefully to make the V_{CC} voltage higher than 8 V when the input voltage is 265 V_{AC} at no load.
- R110 should be designed carefully to make the V_{CC} voltage lower than OVP level when the input voltage is 85 V_{AC} at full load.
- R103 should be designed to keep the MOSFET V_{DS} voltage lower than maximum rating when the output is shorted.

© 2009 Fairchild Semiconductor Corporation

1. Schematic

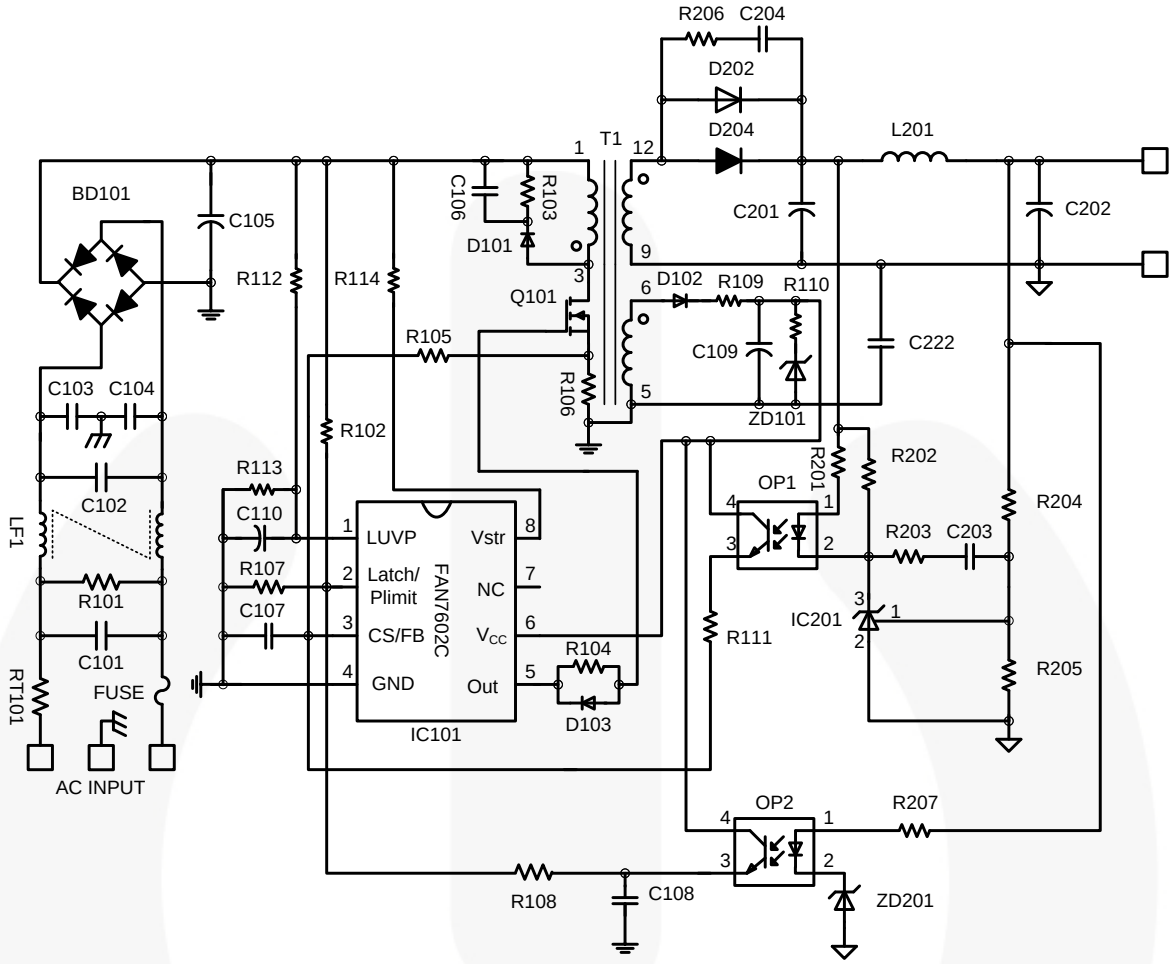

Figure 26. Schematic

2. Inductor Schematic Diagram

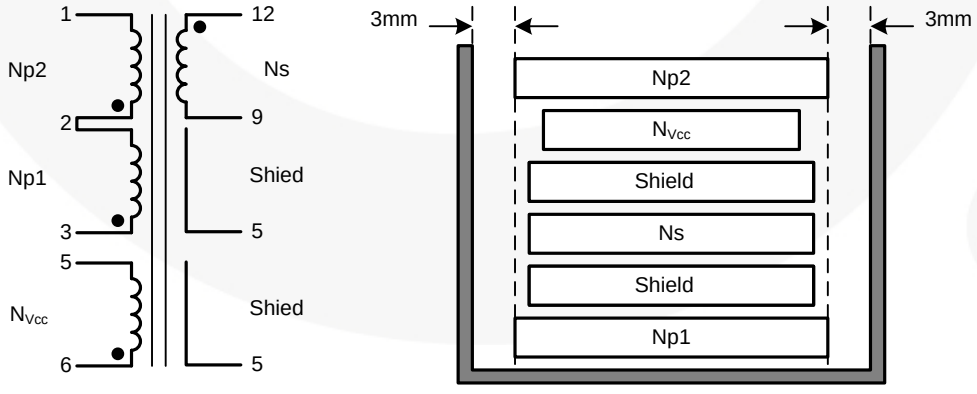

Figure 27. Inductor Schematic Diagram

© 2009 Fairchild Semiconductor Corporation

3. Winding Specification

No.	Pin (S → F)	Wire	Turns	Winding Method
N_{p1}	3 → 2	0.3^{ϕ} x 2	31	Solenoid Winding
Insulation: Polyester Tape t = 0.03 mm, 2-Layer				
Shield	5	Copper Tape	0.9	Not Shorted
Insulation: Polyester Tape t = 0.03 mm, 2-Layer				
N_S	12 → 9	0.65^{ϕ} x 3	10	Solenoid Winding
Insulation: Polyester Tape t = 0.03 mm, 2-Layer				
Shield	5	Copper Tape	0.9	Not Shorted
Insulation: Polyester Tape t = 0.03 mm, 2-Layer				
N_{Vcc}	6 → 5	0.2^{ϕ} x 1	10	Solenoid Winding
Insulation: Polyester Tape t = 0.03 mm, 2-Layer				
N_{p2}	2 → 1	0.3^{ϕ} x 2	31	Solenoid Winding
Outer Insulation: Polyester Tape t = 0.03 mm, 2-Layer				

4. Electrical Characteristics

	Pin	Specification	Remarks
Inductance	1 - 3	607 µH	100 kHz, 1 V
Inductance	1 - 3	15 µH	9 - 12 Shorted

5. Core & Bobbin

- Core: EER2828
- Bobbin: EER2828
- Ae(mm^2): 82.1

© 2009 Fairchild Semiconductor Corporation

6. Demo Circuit Part List

Part	Value	Note	Part	Value	Note
Fuse			**Capacitor**		
FUSE	1 A/250 V		C101	220 nF / 275 V	Box Capacitor
NTC			C102	150 nF / 275 V	Box Capacitor
RT101	5D-9		C103, C104	102 / 1 kV	Ceramic
Resistor			C105	150 µF / 400 V	Electrolytic
R102, R112	10 MΩ	1/4 W	C106	103 / 630 V	Film
R103	56 kΩ	1/2 W	C107	271	Ceramic
R104	150 Ω	1/4 W	C108	103	Ceramic
R105	1 kΩ	1/4 W	C109	22 µF / 25 V	Electrolytic
R106	0.5 Ω	1/2 W	C110	473	Ceramic
R107	56 kΩ	1/4 W	C201, C202	1000 µF / 25 V	Electrolytic
R108	10 kΩ	1/4 W	C203	102	Ceramic
R109	0 Ω	1/4 W	C204	102	Ceramic
R110	1 kΩ	1/4 W	C222	222 / 1 kV	Ceramic
R111	6 kΩ	1/4 W	**MOSFET**		
R113	180 kΩ	1/4 W	Q101	FQPF8N60C	Fairchild Semiconductor
R114	50 kΩ	1/4 W	**Diode**		
R201	1.5 kΩ	1/4 W	D101, D102	UF4007	Fairchild Semiconductor
R202	1.2 kΩ	1/4 W	D103	1N5819	Fairchild Semiconductor
R203	20 kΩ	1/4 W	D202, D204	FYPF2010DN	Fairchild Semiconductor
R204	27 kΩ	1/4 W	ZD101, ZD201	1N4744	Fairchild Semiconductor
R205	7 kΩ	1/4 W	BD101	KBP06	Fairchild Semiconductor
R206	10 Ω	1/2 W	**TNR**		
R207	10 kΩ	1/4 W	R101	471	470 V
IC			**Filter**		
IC101	FAN7602C	Fairchild Semiconductor	LF101	23 mH	0.8 A
IC201	KA431	Fairchild Semiconductor	L201	10 µH	4.2 A
OP1, OP2	H11A817B	Fairchild Semiconductor			

© 2009 Fairchild Semiconductor Corporation

7. PCB Layout

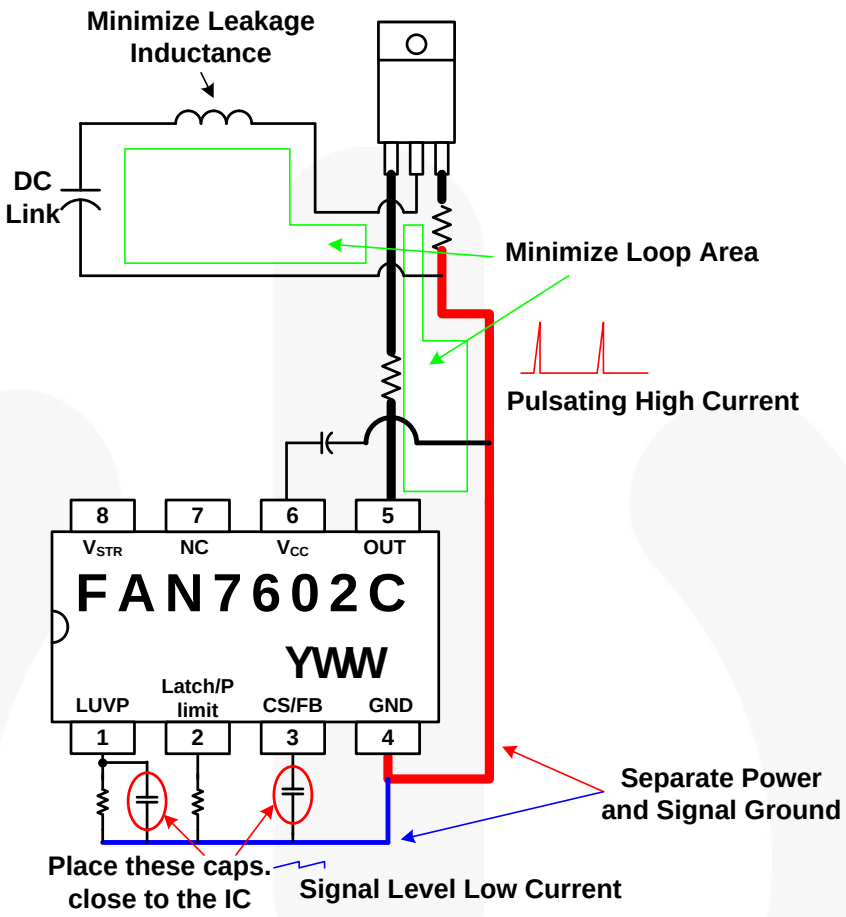

Figure 28. PCB Layout Recommendations

8. Performance Data

	85 V_{AC}	110 V_{AC}	220 V_{AC}	265 V_{AC}
Input Power at No Load	72 mW	76 mW	92 mW	107 mW
Input Power at 0.5 W Load	760 mW	760 mW	785 mW	805 mW
OLP Point	4.73 A	5.07 A	5.11 A	4.91 A

© 2009 Fairchild Semiconductor Corporation

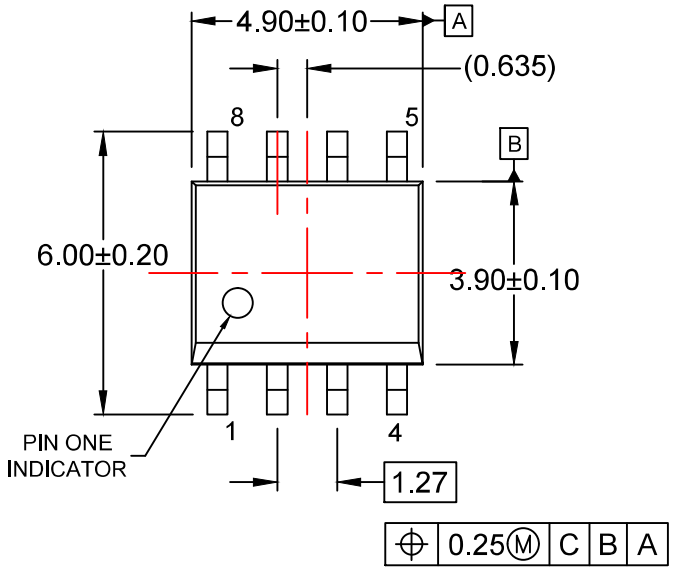

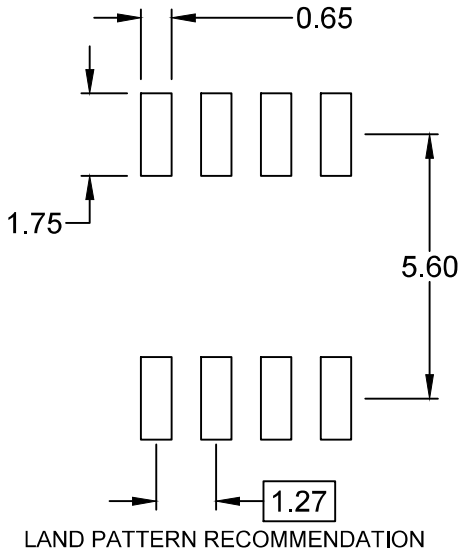

LAND PATTERN RECOMMENDATION

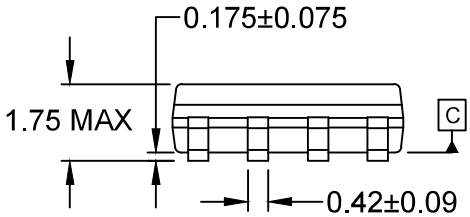

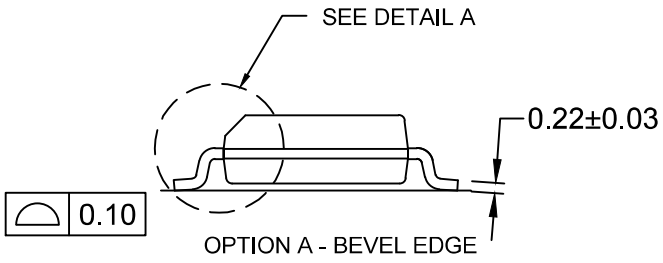

OPTION A - BEVEL EDGE

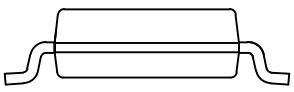

OPTION B - NO BEVEL EDGE

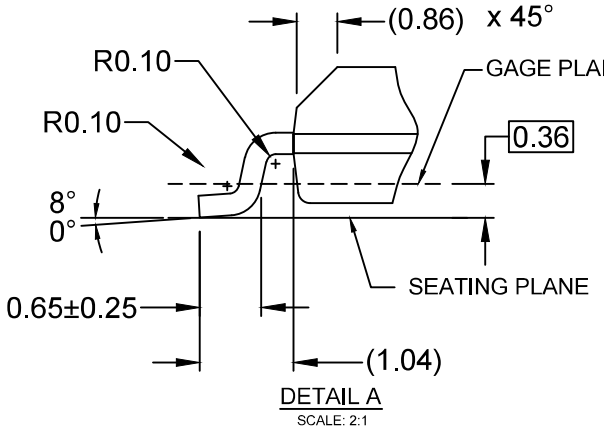

DETAIL A
SCALE: 2:1

NOTES:

A) THIS PACKAGE CONFORMS TO JEDEC MS-012, VARIATION AA.
B) ALL DIMENSIONS ARE IN MILLIMETERS.
C) DIMENSIONS DO NOT INCLUDE MOLD FLASH OR BURRS.
D) LANDPATTERN STANDARD: SOIC127P600X175-8M
E) DRAWING FILENAME: M08Arev16

FAIRCHILD.

ON Semiconductor and ON are trademarks of Semiconductor Components Industries, LLC dba ON Semiconductor or its subsidiaries in the United States and/or other countries. ON Semiconductor owns the rights to a number of patents, trademarks, copyrights, trade secrets, and other intellectual property. A listing of ON Semiconductor's product/patent coverage may be accessed at www.onsemi.com/site/pdf/Patent−Marking.pdf. ON Semiconductor reserves the right to make changes without further notice to any products herein. ON Semiconductor makes no warranty, representation or guarantee regarding the suitability of its products for any particular purpose, nor does ON Semiconductor assume any liability arising out of the application or use of any product or circuit, and specifically disclaims any and all liability, including without limitation special, consequential or incidental damages. Buyer is responsible for its products and applications using ON Semiconductor products, including compliance with all laws, regulations and safety requirements or standards, regardless of any support or applications information provided by ON Semiconductor. "Typical" parameters which may be provided in ON Semiconductor data sheets and/or specifications can and do vary in different applications and actual performance may vary over time. All operating parameters, including "Typicals" must be validated for each customer application by customer's technical experts. ON Semiconductor does not convey any license under its patent rights nor the rights of others. ON Semiconductor products are not designed, intended, or authorized for use as a critical component in life support systems or any FDA Class 3 medical devices or medical devices with a same or similar classification in a foreign jurisdiction or any devices intended for implantation in the human body. Should Buyer purchase or use ON Semiconductor products for any such unintended or unauthorized application, Buyer shall indemnify and hold ON Semiconductor and its officers, employees, subsidiaries, affiliates, and distributors harmless against all claims, costs, damages, and expenses, and reasonable attorney fees arising out of, directly or indirectly, any claim of personal injury or death associated with such unintended or unauthorized use, even if such claim alleges that ON Semiconductor was negligent regarding the design or manufacture of the part. ON Semiconductor is an Equal Opportunity/Affirmative Action Employer. This literature is subject to all applicable copyright laws and is not for resale in any manner.

PUBLICATION ORDERING INFORMATION

LITERATURE FULFILLMENT:
Literature Distribution Center for ON Semiconductor
19521 E. 32nd Pkwy, Aurora, Colorado 80011 USA
Phone: 303−675−2175 or 800−344−3860 Toll Free USA/Canada
Fax: 303−675−2176 or 800−344−3867 Toll Free USA/Canada
Email: orderlit@onsemi.com

N. American Technical Support: 800−282−9855 Toll Free USA/Canada
Europe, Middle East and Africa Technical Support:
Phone: 421 33 790 2910
Japan Customer Focus Center
Phone: 81−3−5817−1050

ON Semiconductor Website: **www.onsemi.com**

Order Literature: http://www.onsemi.com/orderlit

For additional information, please contact your local Sales Representative

ENTEGRECİ

Bu belge www.entegreci.com üzerinden sunulmaktadır.

Elektronik komponent tedarikinde Entegreci

Entegreci, Eskişehir merkezli, Türkiye geneline satış yapan bir elektronik komponent mağazasıdır. Entegreler (IC), mikrodenetleyiciler, transistörler, diyotlar, pasif elemanlar, konnektörler, modüller ve geliştirme kartları tek adetten seri üretim adetlerine kadar satılır. Ürün sayfalarında güncel stok durumunu, fiyatı ve datasheet bağlantısını bulabilirsiniz.

Parça koduyla arama

Üretici parça numarasını yazın; stok ve fiyatı hemen görün.

www.entegreci.com

Ürün kategorileri

Entegreden kapasitöre tüm elektronik komponent kategorileri.

Kategorilere göz atın

Üreticiler

Aradığınız üreticinin ürünlerini tek sayfada inceleyin.

Üreticileri görün

Toplu alım ve teklif

Listede olmayan ya da yüksek adetli parçalar için teklif isteyin.

Teklif isteyin

www.entegreci.com | **destek@entegreci.com** | **0850 305 90 34**

Entegreci is an online electronic components store based in Türkiye. Search by manufacturer part number to see stock, prices and datasheets for integrated circuits, microcontrollers, transistors, passive components and connectors, or request a quote for parts that are not listed.

Bu sayfa Entegreci tarafından eklenmiştir. Belgenin önceki sayfaları asıl yayıncısına aittir ve içeriği değiştirilmemiştir; en güncel sürüm için belgenin yayıncısına başvurun.