

Is Now Part of



ON Semiconductor®

To learn more about ON Semiconductor, please visit our website at
www.onsemi.com

Please note: As part of the Fairchild Semiconductor integration, some of the Fairchild orderable part numbers will need to change in order to meet ON Semiconductor's system requirements. Since the ON Semiconductor product management systems do not have the ability to manage part nomenclature that utilizes an underscore (_), the underscore (_) in the Fairchild part numbers will be changed to a dash (-). This document may contain device numbers with an underscore (_). Please check the ON Semiconductor website to verify the updated device numbers. The most current and up-to-date ordering information can be found at www.onsemi.com. Please email any questions regarding the system integration to Fairchild_questions@onsemi.com.

ON Semiconductor and the ON Semiconductor logo are trademarks of Semiconductor Components Industries, LLC dba ON Semiconductor or its subsidiaries in the United States and/or other countries. ON Semiconductor owns the rights to a number of patents, trademarks, copyrights, trade secrets, and other intellectual property. A listing of ON Semiconductor's product/patent coverage may be accessed at www.onsemi.com/site/pdf/Patent-Marking.pdf. ON Semiconductor reserves the right to make changes without further notice to any products herein. ON Semiconductor makes no warranty, representation or guarantee regarding the suitability of its products for any particular purpose, nor does ON Semiconductor assume any liability arising out of the application or use of any product or circuit, and specifically disclaims any and all liability, including without limitation special, consequential or incidental damages. Buyer is responsible for its products and applications using ON Semiconductor products, including compliance with all laws, regulations and safety requirements or standards, regardless of any support or applications information provided by ON Semiconductor. "Typical" parameters which may be provided in ON Semiconductor data sheets and/or specifications can and do vary in different applications and actual performance may vary over time. All operating parameters, including "Typicals" must be validated for each customer application by customer's technical experts. ON Semiconductor does not convey any license under its patent rights nor the rights of others. ON Semiconductor products are not designed, intended, or authorized for use as a critical component in life support systems or any FDA Class 3 medical devices or medical devices with a same or similar classification in a foreign jurisdiction or any devices intended for implantation in the human body. Should Buyer purchase or use ON Semiconductor products for any such unintended or unauthorized application, Buyer shall indemnify and hold ON Semiconductor and its officers, employees, subsidiaries, affiliates, and distributors harmless against all claims, costs, damages, and expenses, and reasonable attorney fees arising out of, directly or indirectly, any claim of personal injury or death associated with such unintended or unauthorized use, even if such claim alleges that ON Semiconductor was negligent regarding the design or manufacture of the part. ON Semiconductor is an Equal Opportunity/Affirmative Action Employer. This literature is subject to all applicable copyright laws and is not for resale in any manner.

April 2016

FAN7554
Versatile PWM Controller

Features

- Current mode control
- Pulse-by-Pulse Current Limiting
- Low External Components
- Under-Voltage Lockout(UVLO): 9 V/15 V
- Stand-by Current: Typical: 100 µA
- Power Saving Mode Current: Typical: 200 µA
- Operating Current: Typical. 7 mA
- Soft-Start
- On/Off Control
- Overload Protection (OLP)
- Over-Voltage Protection (OVP)
- Over-Current Protection (OCP)
- Over-Current Limit (OCL)
- Operating Frequency up to 500 kHz
- 1 A Totem-Pole Output Current

Applications

- Off-Line & DC-DC Converter

Description

The FAN7554 is a fixed frequency current mode PWM controller. It is specially designed for off-line and DC to DC converter applications with minimal external components. These integrated circuits feature a trimmed oscillator for precise duty cycle control, a temperature compensated reference, an ON/OFF control, a high gain error amplifier, a current sensing comparator, and a high current totem-pole output. The FAN7554 has various protection functions such as an overload protection, an over-current protection, and the over-voltage protection, which include built-in auto restart circuit. The FAN7554 is available in the 8-DIP package.



Figure 1. 8-Dip Package

Ordering Information

Part Number	Operating Temperature Range	Package	Packing Method
FAN7554	-25 to 85°C	8-Lead Dual Inline Package (DIP)	Rail

© 2003 Fairchild Semiconductor Corporation

Block Diagram

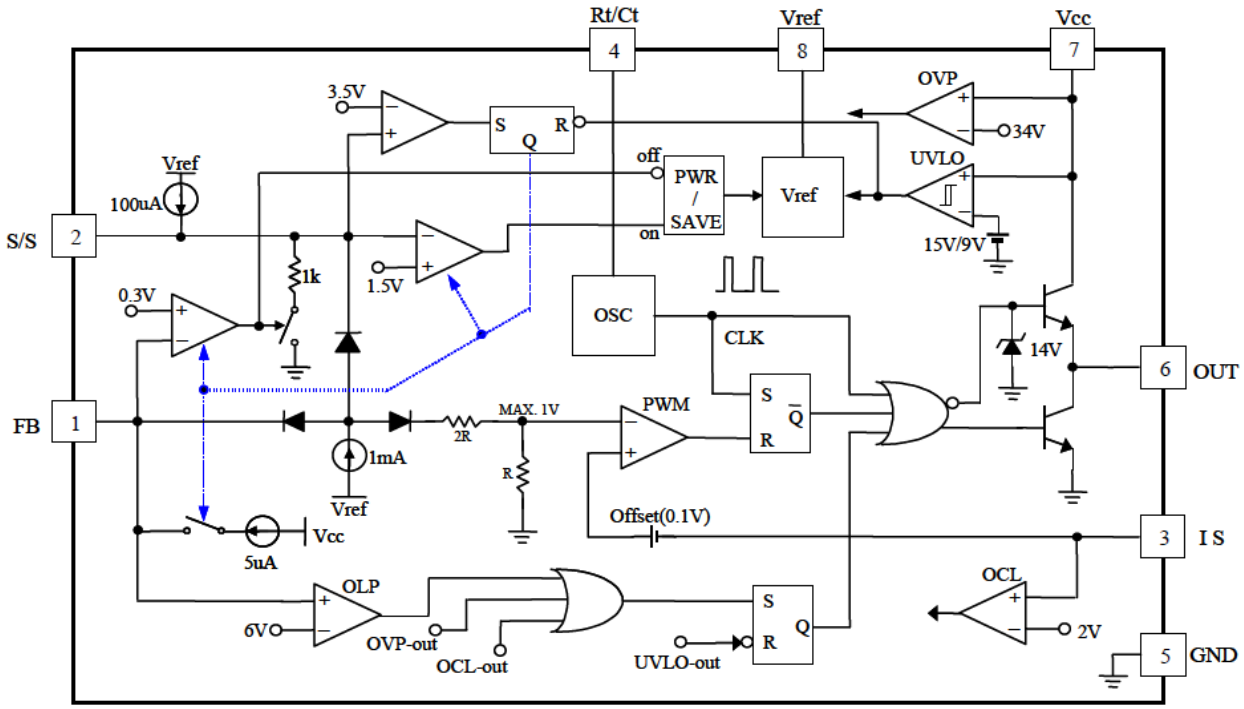

Figure 2. Block Diagram

Pin Configuration / Marking Information

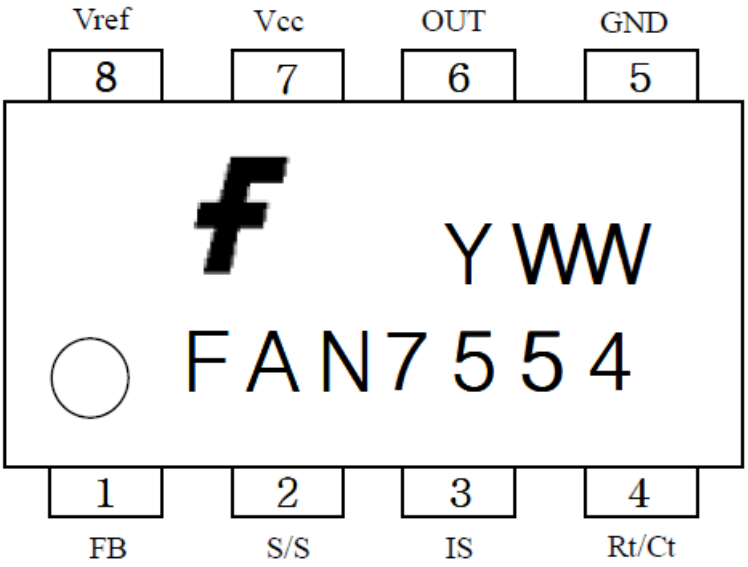

Figure 3. Pin Assignment (Top Through View)

Pin Descriptions

Pin #	Pin Name	Description
1	FB	Inverting(-) Input of pwm Comparator, On/Off Control & OLP Sensing Terminal
2	S/S	Soft-Start
3	IS	Non-inverting(+) Input of PWM Comparator, OCL Sensing Terminal
4	Rt/Ct	Oscillator Time Constant (Rt/Ct)
5	GND	Ground
6	OUT	Output of Gate Driver
7	V_{CC}	Power Supply
8	V_{REF}	Output of 5 V Reference

© 2003 Fairchild Semiconductor Corporation

Absolute Maximum Ratings

Stresses exceeding the absolute maximum ratings may damage the device. The device may not function or be operable above the recommended operating conditions and stressing the parts to these levels is not recommended. In addition, extended exposure to stresses above the recommended operating conditions may affect device reliability. The absolute maximum ratings are stress ratings only.

Symbol	Parameter	Min.	Max.	Unit
V_{CC}	Supply Voltage		30	V
I_O	Output Current		±1	A
V_{FB}	Input Voltage to FB Pin		-0.3 to V_{SD}	V
V_{IS}	Input Voltage to IS Pin		-0.3 to V_{OC}	V
P_D	Power Dissipation at $T_A \leq 25°C$		0.85	W
T_{OPR}	Operating Temperature	-25	85	°C
T_{STG}	Storage Temperature	-55	150	°C
$R_{\Theta JA}$	Thermal Resistance, Junction-to-Air[1]		147.8	°C/W

Note:

1. Junction -to -air thermal resistance test environments:
   - JESD51-2: Integrated circuits thermal test method environmental conditions-natural convection (still air).
   - JESD51-3: Low effective thermal conductivity test board for leaded surface mount packages.

Temperature Characteristics

Symbol	Parameter	Min.	Max.	Unit
$\Delta V_{REF}3$	V_{REF} Temperature Stability		±0.5	%
$\Delta f_{OSC}2$	f_{OSC} Temperature Stability		±5	%

© 2003 Fairchild Semiconductor Corporation

Electrical Characteristics

Unless otherwise specified, T_A = 25°C, V_{CC}=16 V, Rt=10 kΩ, Ct=3.3 nF.

Symbol	Parameter	Conditions	Min.	Typ.	Max.	Unit
Reference Section						
V_{REF}	Reference Output Voltage	T_J =25°C, I_{REF} = 1 mA	4.90	5.00	5.10	V
$\Delta V_{REF}1$	Line Regulation	V_{CC} = 12 V ~ 25 V		6	20	mV
$\Delta V_{REF}2$	Load Regulation	I_{REF} = 1 mA ~ 20 mA		6	25	mV
I_{SC}	Short-Circuit Output Current	T_J = 25°C		0.10	0.18	A
Oscillator Section						
f_{OSC}	Oscillation Frequency	T_J = 25°C	45	50	55	kHz
Δf_{OSC1}	Frequency Change with V_{CC}	V_{CC} = 12 V ~ 25 V		0.05	1.00	%
V_{RH}	Ramp High Voltage			2.8		V
V_{RL}	Ramp Low Voltage			1.2		V
I_{disch}	Discharge Current	$V_{RT/CT}$ = 3.3 V	6.1		9.4	mA
PWM Section						
$V_{TH(IS)}$	Sense Threshold Voltage	V_{FB} = 5 V	0.8	1.0	1.2	V
$V_{TH(FB)}$	Feedback Threshold Voltage	V_{IS} = 0 V	0.2	0.3	0.4	V
I_{FB}	Feedback Source Current	V_{FB} = 0 V, $V_{S/S}$ = 5 V		1.0		mA
$D_{(MAX)}$	Max. Duty Cycle		92	95	98	%
$D_{(MIN)}$	Min. Duty Cycle				0	%
Protection Section						
I_{SD}	Shutdown Delay Current	4 V ≤ V_{FB} ≤ V_{SD}	3.5	5.0	6.5	µA
V_{SD}	Shutdown Feedback Voltage	V_{FB} > 5 V	5.4	6.0	6.6	V
V_{OC}	Over-Current Protection	V_{IS} > 1.5 V, t_{ON} > 500 nS	1.6	2.0	2.4	V
V_{OVP}	Over-Voltage Protection		30	34	38	V
ON/OFF Control Section						
I_{SINK}	Off Mode Sink Current	V_{FB} < $V_{TH(FB)}$, $V_{S/S}$ = 5 V		4		mA
V_{OFF}	Off Threshold Voltage	V_{FB} < $V_{TH(FB)}$	1.2	1.5	1.8	V
Soft-Start Section						
$I_{S/S}$	Soft-Start Current	V_{FB} = 5 V, $V_{S/S}$ = 0 V		1.1		mA
$V_{LIM(S/S)}$	Soft-Start Limit Voltage	V_{CC} = 16 V		5.2		V

Continued on the following page…

© 2003 Fairchild Semiconductor Corporation

Electrical Characteristics (Continued)

Unless otherwise specified, T_A = 25°C, V_{CC}=16 V, Rt = 10 kΩ, Ct = 3.3 nF.

Symbol	Parameter	Conditions	Min.	Typ.	Max.	Unit
Output Section						
V_{OL1}	Low Output Voltage1	V_{CC} = 18 V, I_O = 50 mA		0.15	0.40	V
V_{OH1}	High Output Voltage1	V_{CC} = 18 V, I_O = -50 mA	13	15	17	V
V_{OL2}	Low Output Voltage2	V_{CC} = 18 V, I_O = 200 mA		1.5	2.5	V
V_{OH2}	High Output Voltage2	V_{CC} = 18 V, I_O = -200 mA	12	14	16	V
t_R	Rise Time[2]	T_J = 25°C, C_L = 1 nF		80		ns
t_F	Fall Time [2]	T_J = 25°C, C_L = 1 nF		40		ns
UVLO Section						
$V_{TH(ST)}$	Start Threshold Voltage		13.2	15.0	16.2	V
$V_{OPR(M)}$	Min. Operating Voltage		8.2	9.0	10.2	V
Total Standby Current Section						
I_{ST}	Startup Current			0.1	0.2	mA
I_{OP}	Operating Supply Current			7	10	mA
I_{OFF}	Off-State Current	V_{FB}<$V_{TH(FB)}$,$V_{S/S}$<V_{OFF}		0.2	0.4	mA

Note:

2. These parameters, although guaranteed, are not 100% tested in production.

© 2003 Fairchild Semiconductor Corporation

Typical Performance Characteristics

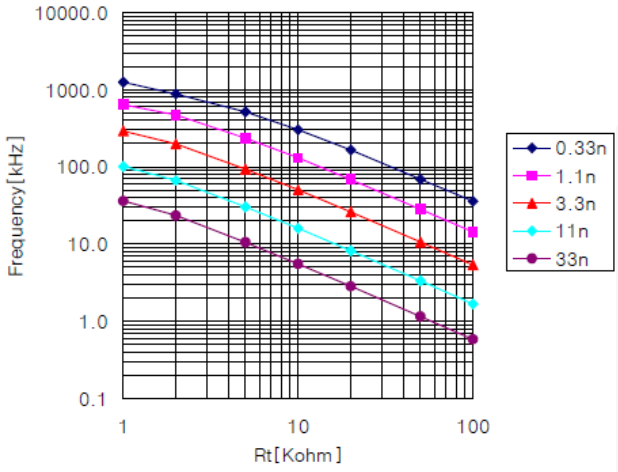

Figure 4. Rt vs. Frequency

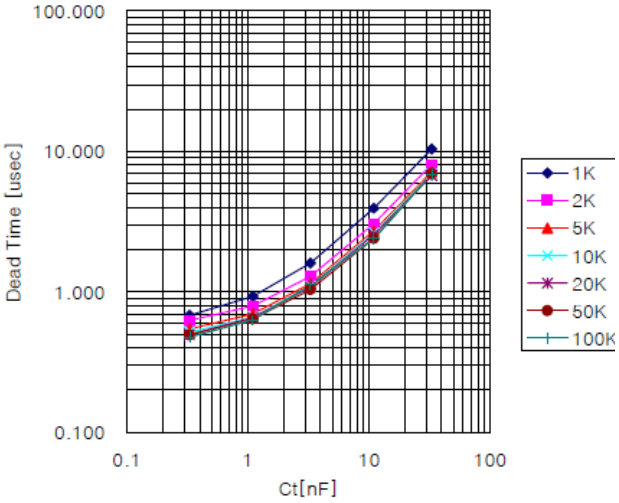

Figure 5. Ct vs. Dead Time

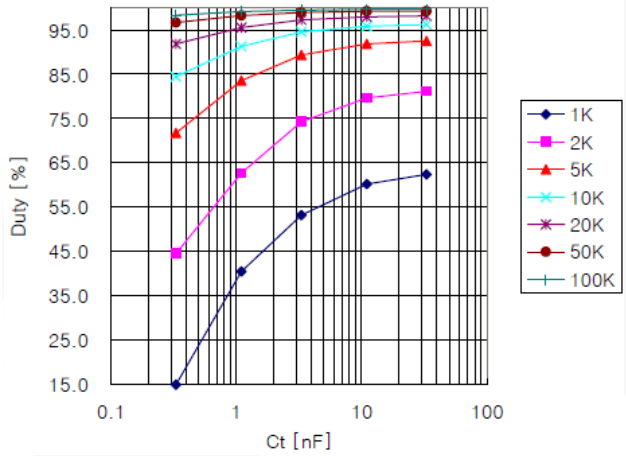

Figure 6. Ct vs. Duty

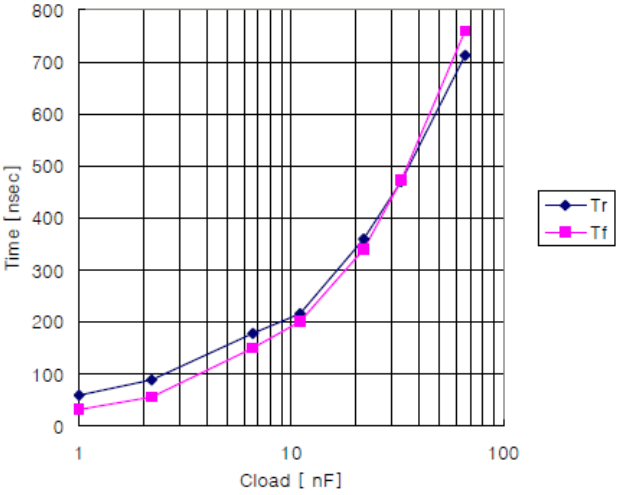

Figure 7. Cload vs. t_R & t_F

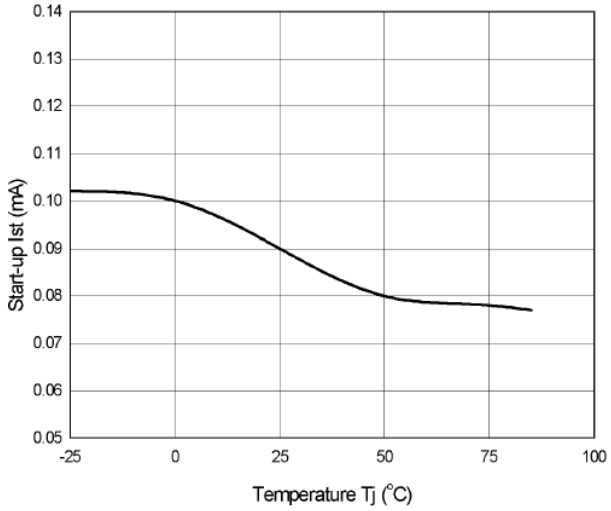

Figure 8. Temperature vs. Startup Current

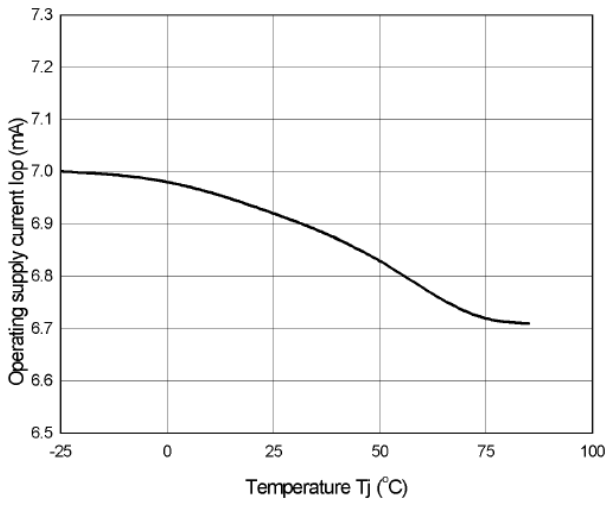

Figure 9. Temperature vs. Operating Supply Current

© 2003 Fairchild Semiconductor Corporation

Typical Performance Characteristics

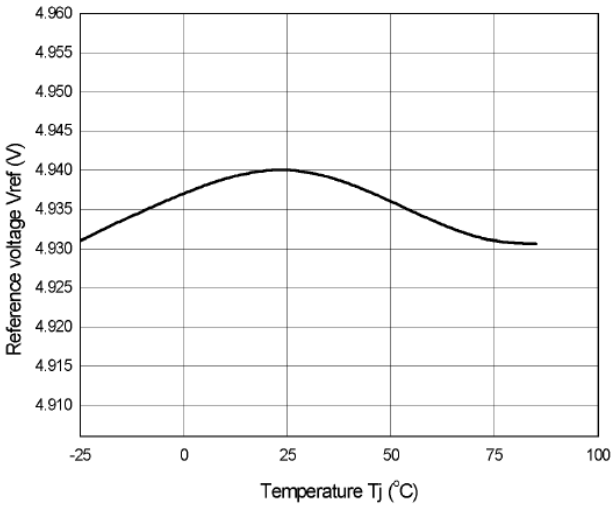

Figure 10. Temperature vs. Reference Voltage

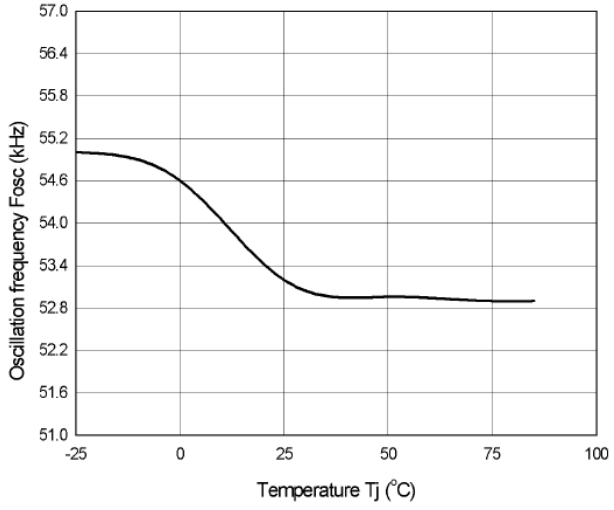

Figure 11. Temperature vs. Oscillation Frequency

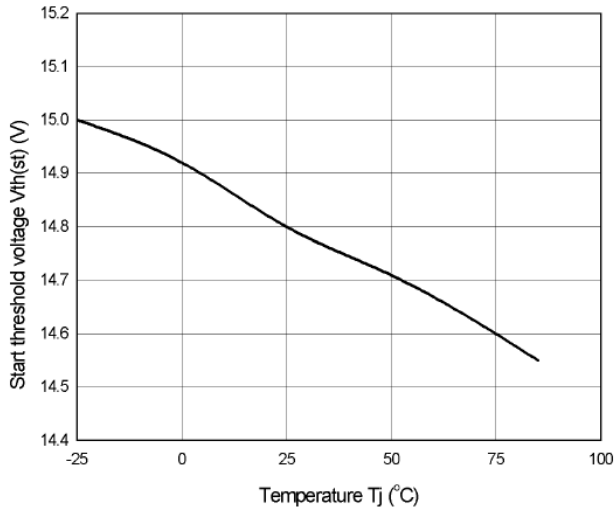

Figure 12. Temperature vs. Start Threshold Voltage

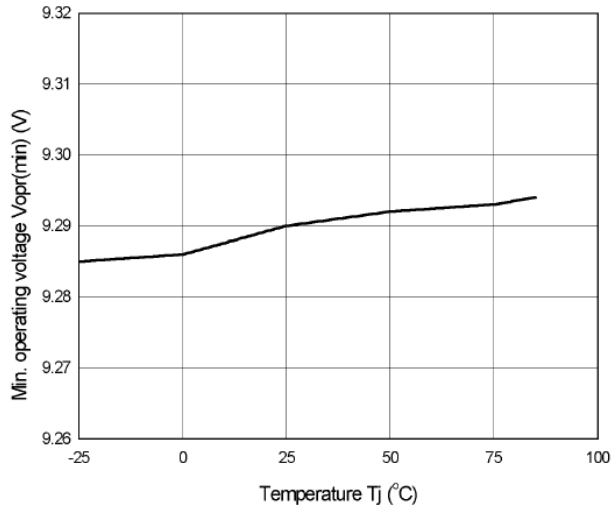

Figure 13. Temperature vs. Min. Operating Voltage

Operation Description

The FAN7554 has all the basic features of the current mode SMPS control IC. Its basic configuration includes the UVLO with 6 V hysteresis, a band gap reference, the oscillator that can oscillate up to 500 kHz according to R_t/C_t (connected externally), a PWM logic circuit, a gate driver, and the feedback circuit that has the current source and soft start function. The FAN7554 has various functions such as an overload protection, an over current protection, and an over-voltage protection. The overload protection forces the FAN7554 to stop its operation if the load current is higher than the preset value. The protection circuit can also be prevented from operating during transient states by ensuring that a certain amount of the time passes before the protection circuit operates. The shutdown circuit is configured for an auto-restart, so the FAN7554 automatically restarts when V_{CC} drops to 9 V (stop voltage).

Startup

The startup circuit is made up of an Under-Voltage Lockout (UVLO), the protection for low voltage conditions, and the 5 V reference (V_{REF}), which supplies bias voltage to the control circuit after startup. The start voltage of the UVLO is 15 V, and the stop voltage after turn on is 9 V. It has a 6 V hysteresis. The minimum operating current for startup threshold is typically 100 µA, and this can reduce the power dissipation on the startup resistor. The V_{REF} is composed of the band gap reference circuit with its superior temperature characteristics and supplies power to all the FAN7554 circuits and R_t/C_t, with the exceptions of the ULVO circuit and ON/OFF control circuit.

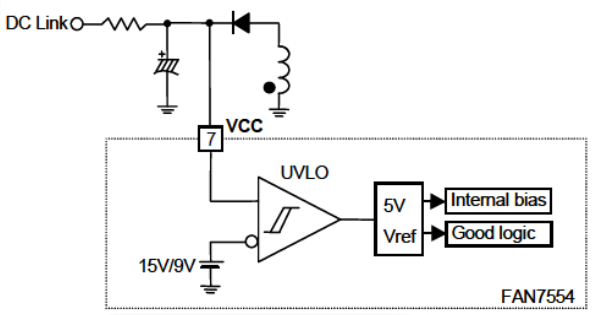

Figure 14. Low Current Startup & Bandgap Reference Circuit

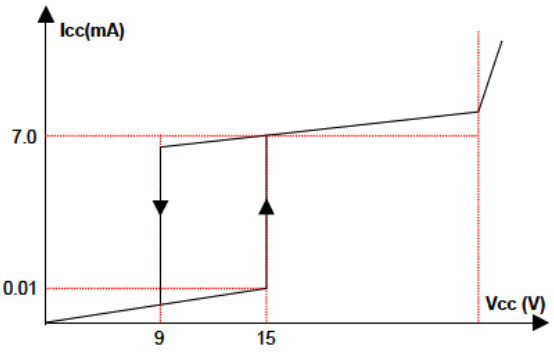

Figure 15. Startup & Circuit Characteristics

Soft Start

The SMPS output load usually contains a capacitive load component. During initial startup, the output voltage increases at a fixed time constant because of this component. If the feedback loop, which controls the output voltage, was to start without the soft-start circuit, the feedback loop would appear to be open during initial startup, so, at startup, the feedback voltage applied to the PWM comparator's inverting input (-) reaches its maximum value (1 V).

During this time, the peak value of the drain current would stay at the maximum value, and the maximum power would be delivered to the secondary load side from the start. When the maximum power is delivered to the secondary side for this initial fixed time, the entire circuit is seriously stressed. The use of a soft-start can avoid such stresses. At startup, the soft-start capacitor C_S is charged by 1 mA and 100 µA current sources.

The voltage of the inverting terminal of the PWM comparator increases to 1/3 of the C_S voltage at a fixed time constant. Subsequently, the drain peak current is limited by the gradual increase in the C_S voltage and this causes the output voltage to increase smoothly. When the C_S voltage becomes greater than 3 V, the diode D_S turns off consequently, the feedback capacitor C_{FB} is charged by 1 mA and 5 µA current sources. This charge voltage determines the comparator's inverting voltage. Then, C_S voltage charges to 5 V by 100 µA current source. The soft start capacitor C_S is discharged when the UVLO good logic starts, so the soft start is repeated at re-start.

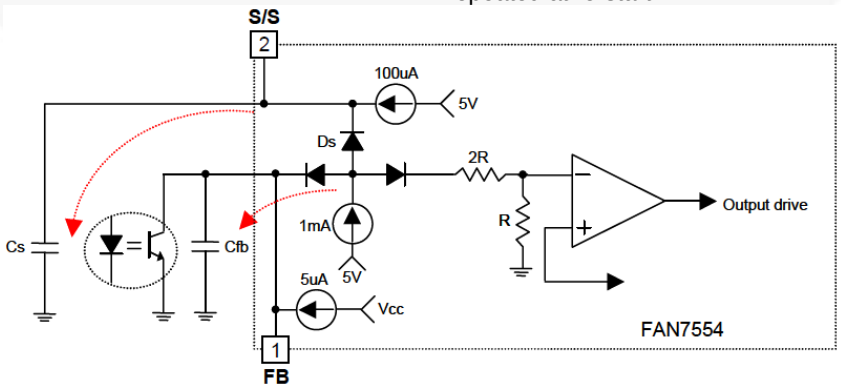

Figure 16. Soft Start Circuit & Circuit Flow

Oscillator

As shown in Figure 17, the oscillator frequency is programmed by values selected for timing components R_t and C_t. Capacitor C_t is charged to almost 2.8 V through resistor R_t from the 5 V reference and discharged to 1.2 V by an internal current source. The oscillator generates the clock signal while the timing capacitor C_t is discharged. The gate drive output becomes low during the clock time. R_t and C_t selection determine the oscillator frequency and maximum duty cycle. Charge and discharge times can be calculated through the equations below.

Charging Time: $t_c = 0.55 \times R_t \times C_t$

Discharging Time: $t_d = R_t \times C_t \times \ln[(0.0063 \times R_t - 2.8) / (0.0063 \times R_t - 3.8)]$

Where the oscillator frequency: $f_{OSC} = (t_c + t_d)^{-1}$ (±10%).

When $R_t > 5\ k\Omega$, fosc = $1 / (0.55 \times R_t \times C_t) = 1.8 / (R_t \times C_t)$.

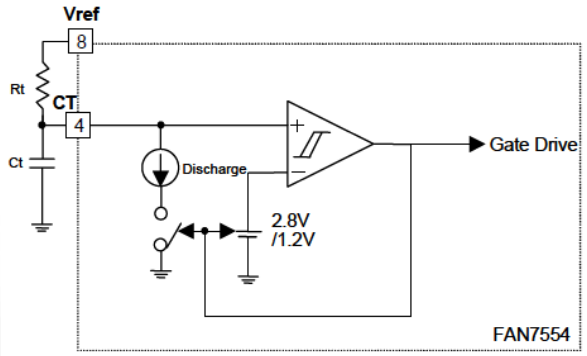

Figure 17. Oscillator Circuit

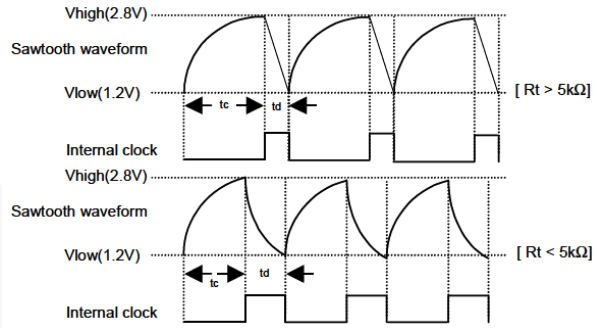

Figure 18. Sawtooth & Clock Waveform

Feedback

As shown in Figure 16, the internal oscillator clock turns on the MOSFET. The feedback comparator operates to turn it off again, when the MOSFET current reaches a set value proportional to V_{FB}. The feedback capacitor C_{FB} is charged by the internal current sources, 1 mA and 5 µA, and is discharged by the secondary side photo-coupler to control the output voltage.

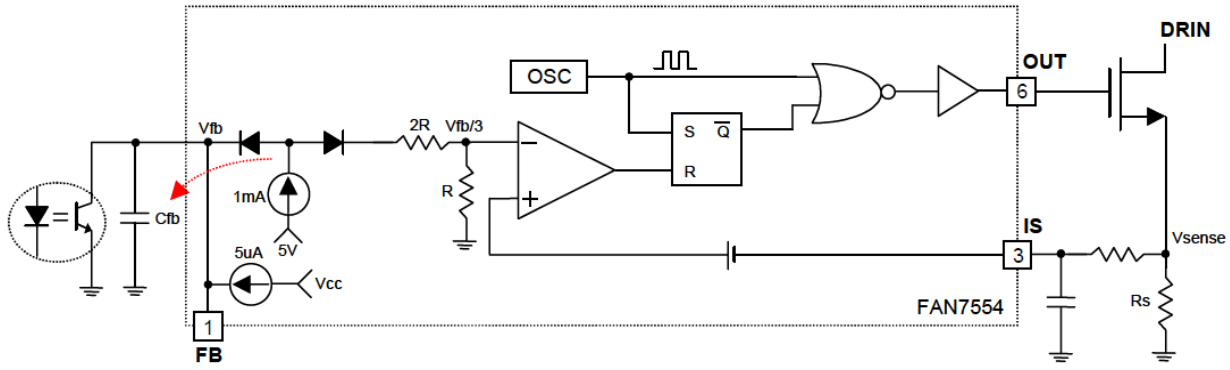

Figure 19. Feedback & PWM Circuit

Delayed Shutdown

During the normal operation, the feedback voltage is between 0~3 V. If the output terminal overloads or an error happens to the feedback loop, the delayed shutdown circuit operates. When the feedback voltage is less than 3 V, the feedback capacitor is charged by current sources, 1 mA and 5 μA; when the feedback voltage becomes greater than 3 V, the capacitor is charged by the 5 μA current source because diode D1 turns off. When the feedback voltage is less than 3 V, the charge slope becomes an exponential function and, when it is greater than 3 V, the charge slope becomes linear. When the feedback voltage reaches almost 6 V, the FAN7554 shuts down. The shut down circuit is configured for auto-restart, so it automatically restarts when V_{CC} reaches the under voltage 9 V.

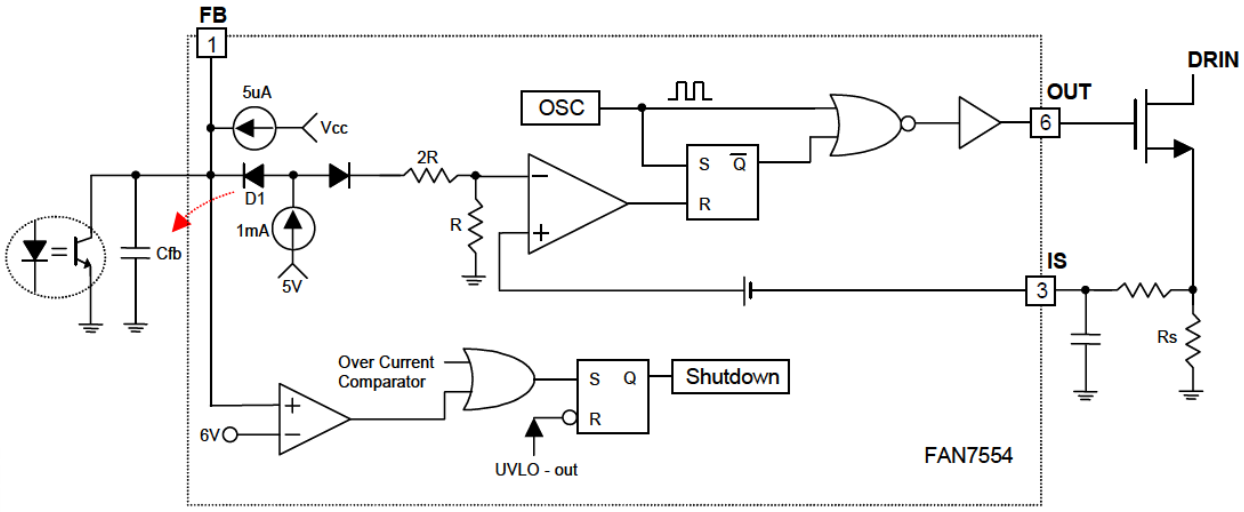

Figure 20. Delayed Shutdown & Feedback Circuit

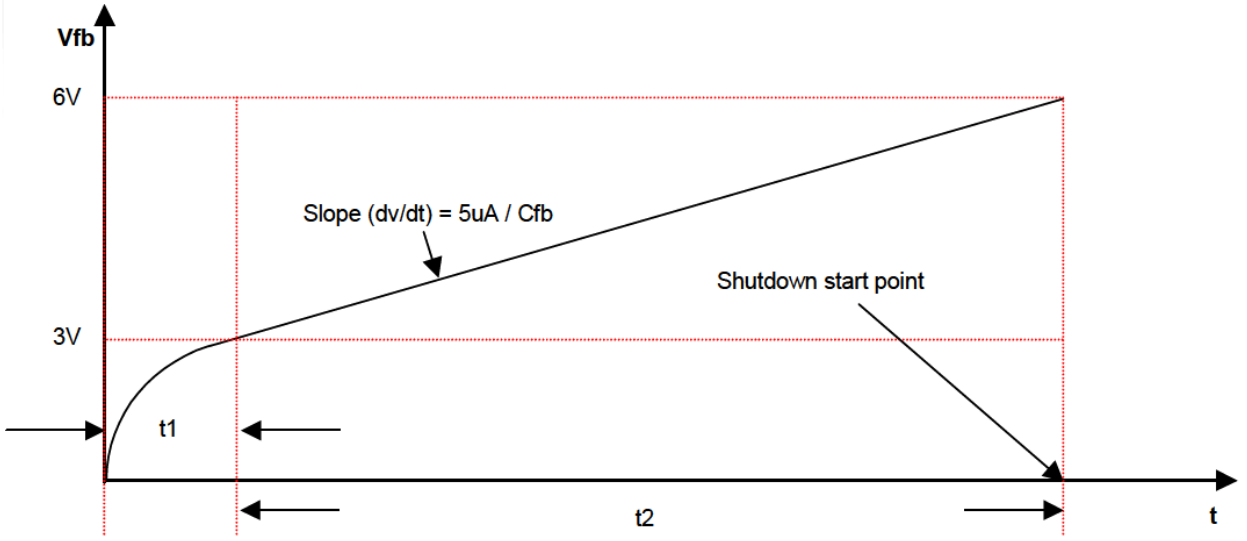

Figure 21. Delayed Shutdown & Feedback Waveform

Gate Driver

The gate drive circuit has the totem-pole output configuration. The output has 1 A peak current and 200 mA average current drive ability.

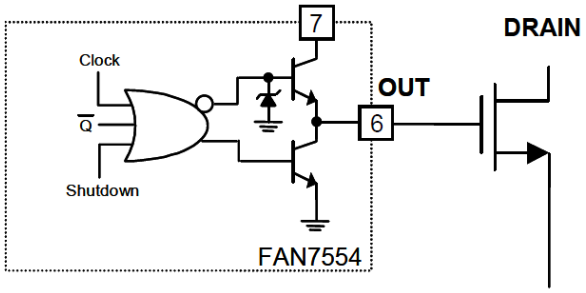

Figure 22. Gate Drive Circuit

ON/OFF Control

The FAN7554 is able to use the feedback pin for ON/OFF control by placing NPN transistor between the cathode of the KA431 and ground as shown in Figure 23. When the transistor turns on, the current flows through the photo diode and saturates the photo transistor. As a result, the feedback voltage is dropped to zero. When the feedback voltage is below 0.3 V, the soft start voltage starts to discharge by connecting the internal resistor 1 kΩ in parallel with the external capacitor Cs. When the soft-start voltage becomes less than 1.5 V, all the blocks in the FAN7554 are turned off, with the exceptions of the UVLO block and ON/OFF control block. The operation current is about 200 µA. So the stand-by power is reduced and SMPS efficiency is improved. When the feedback voltage exceeds 0.3 V, the FAN7554 normally operates by turning on V_{REF} block.

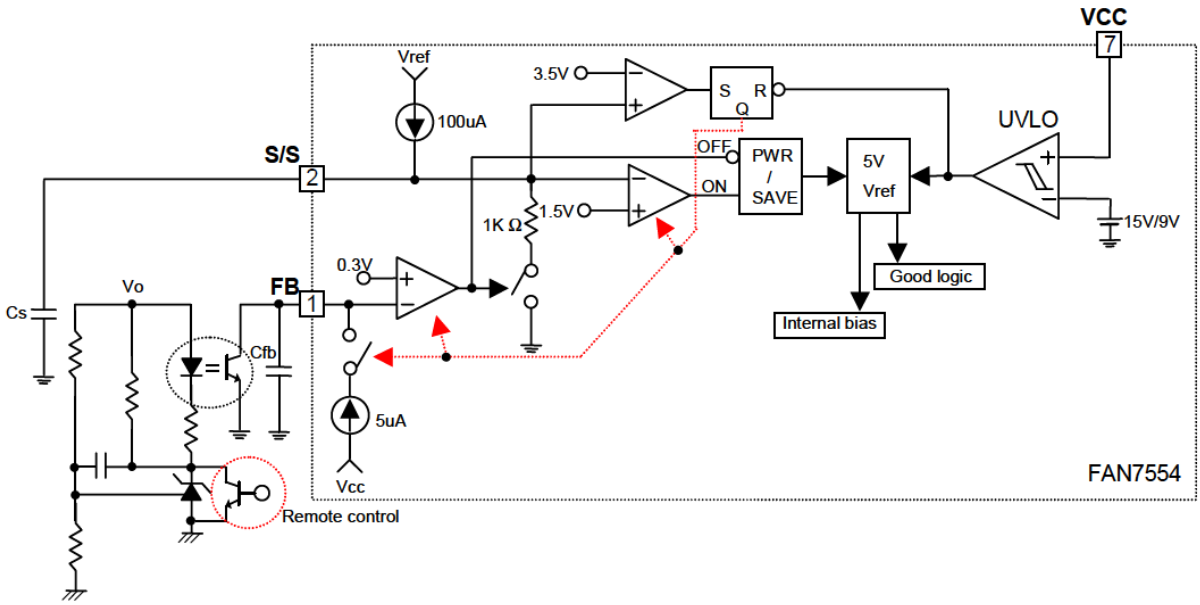

Figure 23. ON/OFF Control Circuit

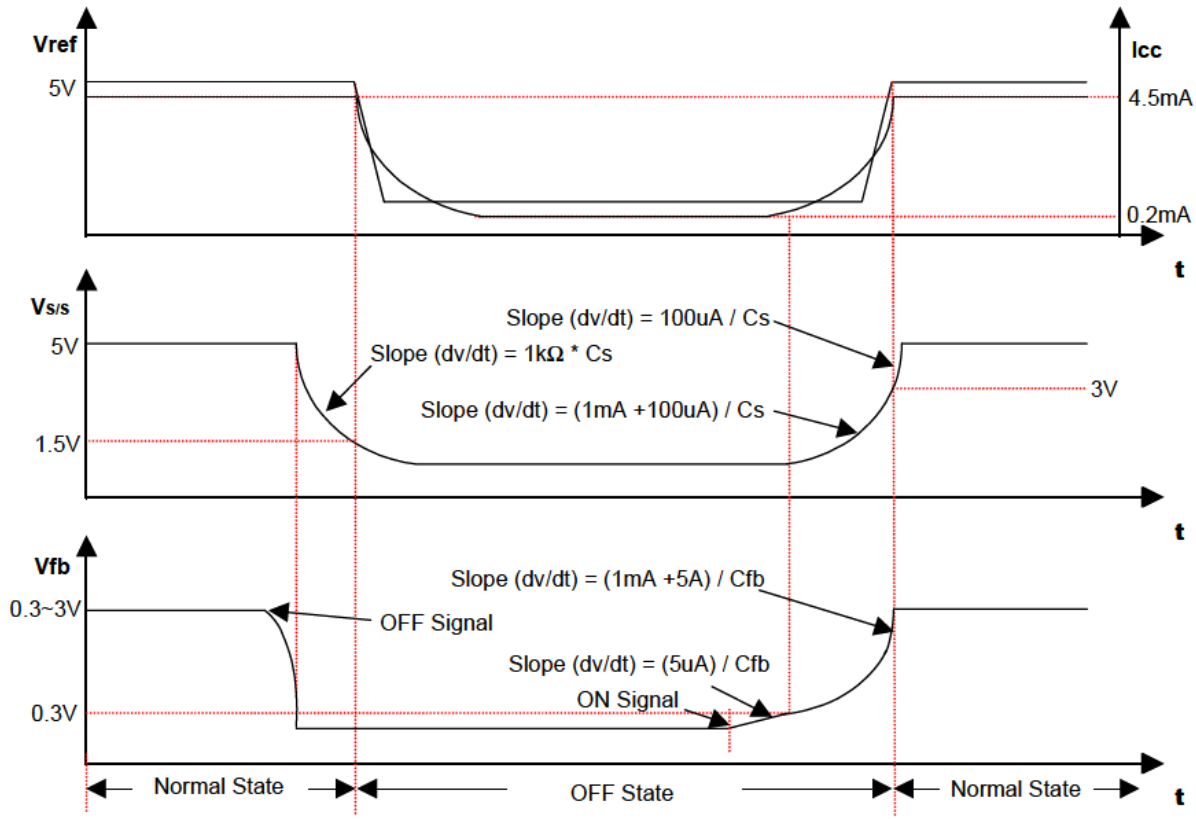

Figure 24. ON-OFF Control Circuit Waveform

Protection Circuits

The FAN7554 has many built-in protection circuits that do not need additional components, providing reliability without cost increase. These protection circuits have the auto-restart configuration. In this configuration, the protection circuits reset when V_{CC} is below UVLO stop threshold (9 V) and restarts when V_{CC} is above UVLO start threshold voltage (15 V)

Over Voltage Protection

Abnormalities may occur in the SMPS secondary side feedback circuit. First, when the feedback pin is short to the ground, the feedback voltage is zero and the FAN7554 is unable to start switching. Second, when the feedback circuit is open, the secondary voltage generally becomes much greater than the rated voltage as the primary side continues to switch at the maximum current level. This may cause the blowing off the fuse or, in serious cases, fires. It is possible that the devices directly connected to the secondary output without a regulator could be destroyed. Even in these cases, the over voltage protection circuit operates. Since V_{CC} is proportional to the output, in an over voltage situation, it also will increase. In the FAN7554, the protection circuit operates when V_{CC} exceeds 34 V. Therefore, in normal operation, V_{CC} must be set below 34 V.

Overload Protection

An overload is the state in which the load is operating normally but in excess of the preset load. The overload protection circuit can force the FAN7554 to stop its operation. The protection can also operate in transient states such as initial SMPS operation. Because the transient state returns to the normal state after a fixed time, the protection circuit need not to operate during this time. That is, the FAN7554 needs the time to detect and decide whether it is an overload condition or not. The protection circuit can be prevented from operating during transient states by ensuring that a certain amount of time passes before the protection circuit operates. The above operations are executed as follows: Since the FAN7554 adopts a current mode, it is impossible for current to flow above a maximum level. For a fixed input voltage, this limits power. Therefore, if the power at the output exceeds this maximum, V_O, shown in Figure 25, becomes less than the set voltage, and the KA431pulls in only the given minimum current. As a result, the photo-coupler's secondary side current becomes zero. The same goes for the photo-coupler's primary side current. Consequently, when the full current 1 mA flows through the internal resistor (2R + R = 3R), V_{FB} becomes approximately 3 V and from that time, the 5 µA current source begins to charge C_{FB} the photo-coupler's secondary current is almost zero. The FAN7554 shuts down when V_{FB} reaches 6 V.

© 2003 Fairchild Semiconductor Corporation

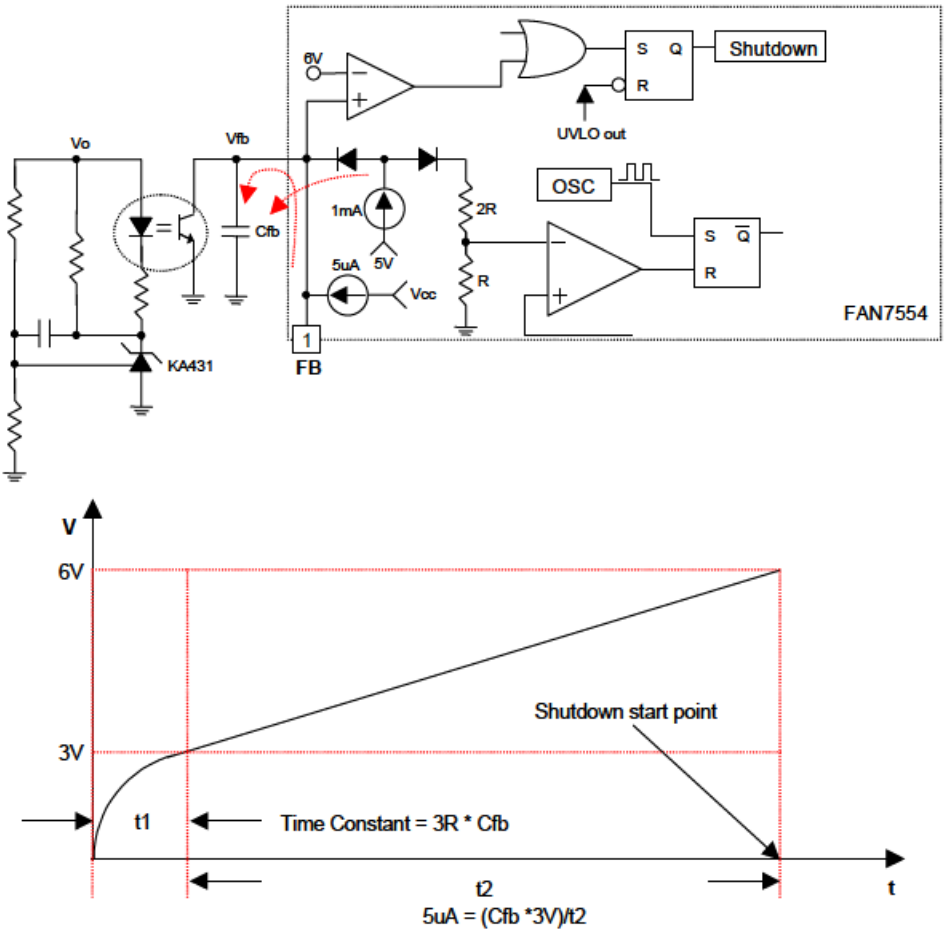

Figure 25. Delayed Shutdown

FAN7554 Flyback Converter Demo Circuit (f_{SW}: 100 kHz)

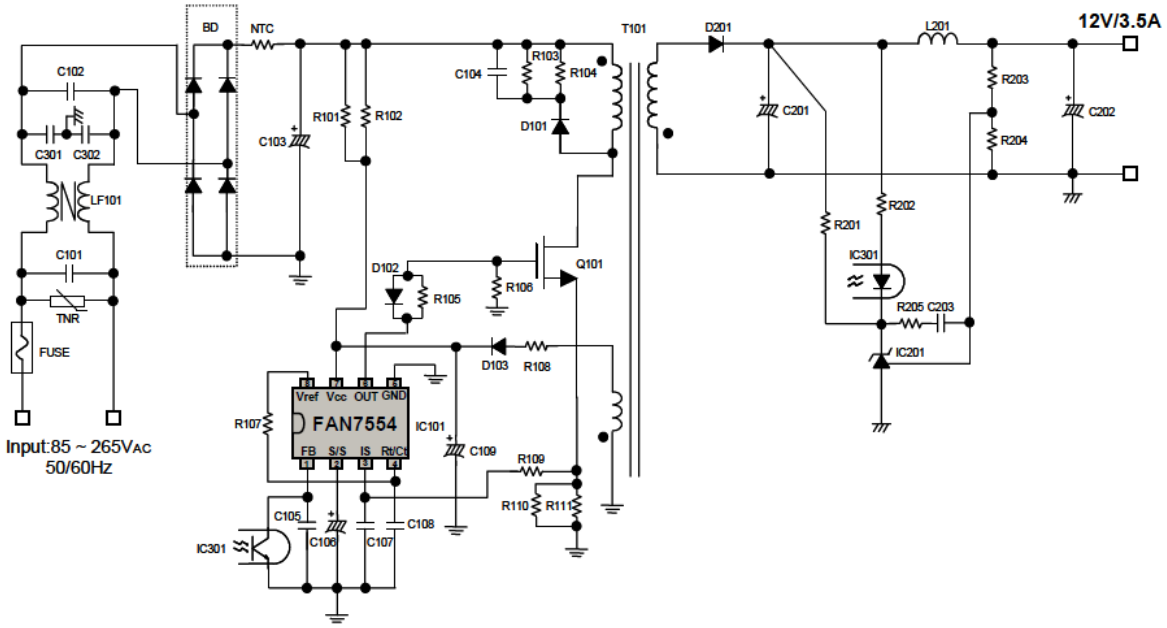

Table 1. Part List For FAN7554 Flyback Converter Demo Board

Part	Value	Note	Part	Value	Note
Fuse			**Capacitor**		
FUSE	250 2 A		C101	100 nF/275 V	Box Capacitor
NTC			C102	100 nF/275 V	Box Capacitor
NTC	5D-11		C103	470 nF/400 WV	Electrolytic
Resistor			C104	103/1 kV	Film Capacitor
R101	330 kΩ	1 W	C105	104	Ceramic
R102			C106	1 µF	Electrolytic
R103, R104	100 kΩ		C107	101	Ceramic
R105	22 kΩ		C108	122	Ceramic
R106	4.7 kΩ		C109	22 µF/50V	Electrolytic
R107	12 kΩ		C201	330 µF	Electrolytic
R108	10 kΩ		C202	330 µF	Electrolytic
R109	1 kΩ		C203	104	Ceramic
R110	0.5 kΩ	2 W	C301		
R201	1 kΩ		C302		
R202	1 kΩ				
R203	4.7 kΩ		**Inductor**		
R204	1.2 kΩ		LF101	30 mH	
R205			L201	6.4 µH	
MOSFET			**Diode**		
Q101		Fairchild	D201	MBRF10100CT	
IC				UF4007	Fairchild
IC101	FQP6N70	Fairchild	D101	1N4148	
IC201	FAN7554	Fairchild	D103	UF4004	Fairchild
IC301	Opto-coupler	Fairchild	BD	G3SBA60	

© 2003 Fairchild Semiconductor Corporation

Transformer Specification

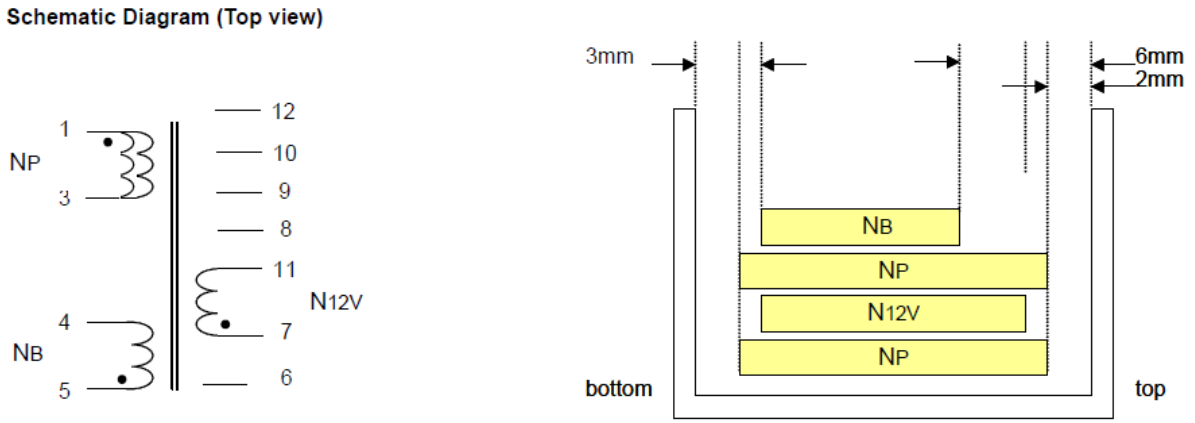

Figure 26. Transformer Specification

Table 2. Winding Specification

No.	Pin (S→F)	Wire	Turns	Winding Method
N_P	1 → 3	0.35φ x 1	44	
N_{12V}	7 → 11	0.35φ x 4	12	
V_P	1 → 3	0.35φ x 1	44	
N_B	5 → 4	0.35φ x 1	14	

Table 3. Electrical Characteristics

Closure	Pin	Specification	Remarks
Inductance	1-3	400 µH ±10%	100 kHz, 1 V
Leakage	1-3	100 µH Max.	2nd All Short

FAN7554 Forward Converter Demo Circuit (f_{SW}: 100 kHz)

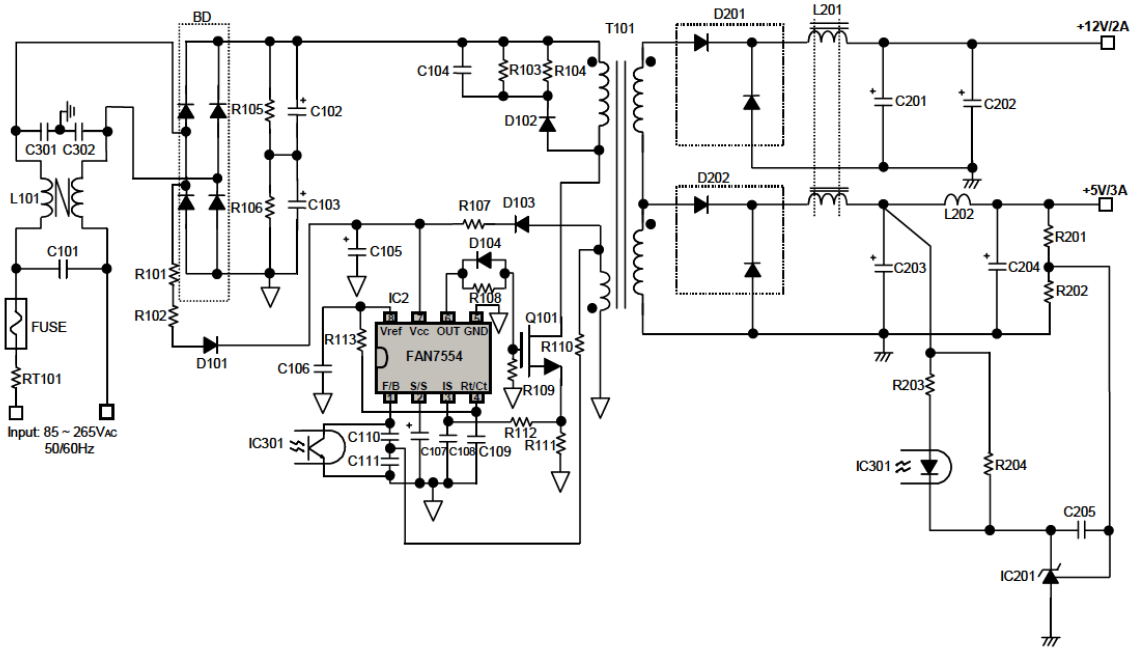

Table 4. Part List For FAN7554 Forward Converter Demo Board

Part	Value	Note	Part	Value	Note
Fuse			**Capacitor**		
FUSE	250 2 A		C101	470 nF/275 V	Box Capacitor
NTC			C102, C103	470 nF/400 WV	Electrolytic
RT101	DSC 10D-11		C104	223/630 V	Film
Resistor			C105	33 µF/35 V	Film Capacitor
R101	330 kΩ	1 W	C106	104	Ceramic
R102			C107	1 µF/35 V	Electrolytic
R103, R104	56 kΩ	1 W	C108	101	Ceramic
R105, R106	220 kΩ	1 W	C109	122	Ceramic
R107	10 kΩ		C110	272	Film
R108	20 kΩ		C111	333	Film
R109	4.7 kΩ		C201,C202	1000 µF/35 V	Electrolytic
R110	1.2 kΩ		C203	330 µF/16 V	Electrolytic
R111	0.5 Ω//0.5 Ω//0.5 Ω	2 W	C204	2200 µF/16 V	Electrolytic
R112	1 kΩ		C205	104	Ceramic
R113	12 kΩ		C301, C302	332/1 kV	Ceramic
R201, R202	10 kΩ		**Inductor**		
R203	1 kΩ		LF101	30 mH	
R204	330 Ω		L201		
MOSFET			**Diode**		
Q101	SSH8N80	Fairchild	D101	IN4004	
IC			D102	FR157	
IC101	FAN7554	Fairchild	D103	UF4007	
IC201	KA431	Fairchild	D201	MBRF10100CT	
IC301	Opto-coupler	Fairchild	D202	MBR3045PT	
			BD	PBS406GU	

© 2003 Fairchild Semiconductor Corporation

Transformer Specification

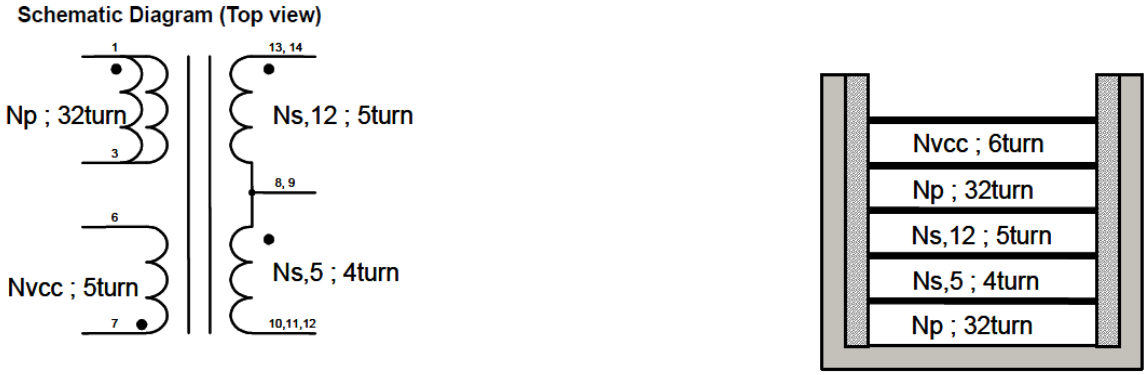

Figure 27. Transformer Specification

Table 5. Winding Specification

No.	Pin (S→F)	Wire	Turns
N_P	1 → 3	0.65φ x 1	32
N_S, 5	8 → 11	0.65φ x 4	4
N_S, 12	4 → 9	0.65φ x 4	5
N_P	1 → 3	0.65φ x 1	32
N_{VCC}	7 → 6	0.65φ x 1	5

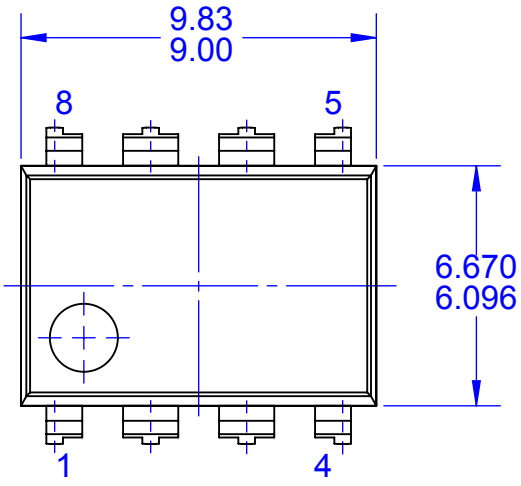

TOP VIEW

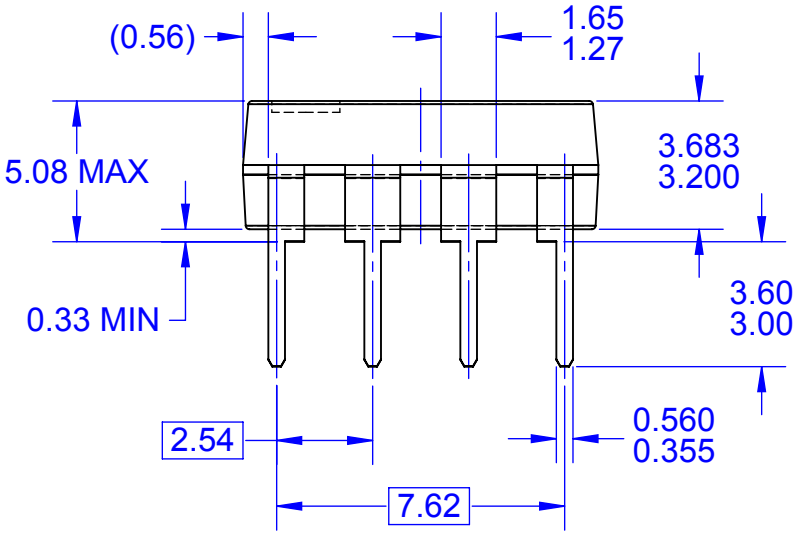

FRONT VIEW

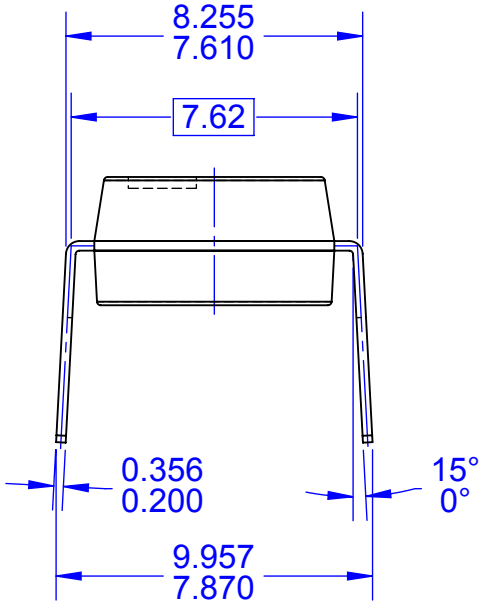

SIDE VIEW

NOTES:

A. CONFORMS TO JEDEC MS-001, VARIATION BA
B. ALL DIMENSIONS ARE IN MILLIMETERS
C. DIMENSIONS ARE EXCLUSIVE OF BURRS, MOLD FLASH, AND TIE BAR EXTRUSIONS
D. DIMENSIONS AND TOLERANCES PER ASME Y14.5M-2009
E. DRAWING FILENAME: MKT-N08Frev3

FAIRCHILD ™

ON Semiconductor and ON are trademarks of Semiconductor Components Industries, LLC dba ON Semiconductor or its subsidiaries in the United States and/or other countries. ON Semiconductor owns the rights to a number of patents, trademarks, copyrights, trade secrets, and other intellectual property. A listing of ON Semiconductor's product/patent coverage may be accessed at www.onsemi.com/site/pdf/Patent−Marking.pdf. ON Semiconductor reserves the right to make changes without further notice to any products herein. ON Semiconductor makes no warranty, representation or guarantee regarding the suitability of its products for any particular purpose, nor does ON Semiconductor assume any liability arising out of the application or use of any product or circuit, and specifically disclaims any and all liability, including without limitation special, consequential or incidental damages. Buyer is responsible for its products and applications using ON Semiconductor products, including compliance with all laws, regulations and safety requirements or standards, regardless of any support or applications information provided by ON Semiconductor. "Typical" parameters which may be provided in ON Semiconductor data sheets and/or specifications can and do vary in different applications and actual performance may vary over time. All operating parameters, including "Typicals" must be validated for each customer application by customer's technical experts. ON Semiconductor does not convey any license under its patent rights nor the rights of others. ON Semiconductor products are not designed, intended, or authorized for use as a critical component in life support systems or any FDA Class 3 medical devices or medical devices with a same or similar classification in a foreign jurisdiction or any devices intended for implantation in the human body. Should Buyer purchase or use ON Semiconductor products for any such unintended or unauthorized application, Buyer shall indemnify and hold ON Semiconductor and its officers, employees, subsidiaries, affiliates, and distributors harmless against all claims, costs, damages, and expenses, and reasonable attorney fees arising out of, directly or indirectly, any claim of personal injury or death associated with such unintended or unauthorized use, even if such claim alleges that ON Semiconductor was negligent regarding the design or manufacture of the part. ON Semiconductor is an Equal Opportunity/Affirmative Action Employer. This literature is subject to all applicable copyright laws and is not for resale in any manner.

PUBLICATION ORDERING INFORMATION

LITERATURE FULFILLMENT:
Literature Distribution Center for ON Semiconductor
19521 E. 32nd Pkwy, Aurora, Colorado 80011 USA
Phone: 303−675−2175 or 800−344−3860 Toll Free USA/Canada
Fax: 303−675−2176 or 800−344−3867 Toll Free USA/Canada
Email: orderlit@onsemi.com

N. American Technical Support: 800−282−9855 Toll Free USA/Canada
Europe, Middle East and Africa Technical Support:
Phone: 421 33 790 2910
Japan Customer Focus Center
Phone: 81−3−5817−1050

ON Semiconductor Website: **www.onsemi.com**

Order Literature: http://www.onsemi.com/orderlit

For additional information, please contact your local Sales Representative

ENTEGRECİ

Bu belge www.entegreci.com üzerinden sunulmaktadır.

Elektronik komponent tedarikinde Entegreci

Entegreci, Eskişehir merkezli, Türkiye geneline satış yapan bir elektronik komponent mağazasıdır. Entegreler (IC), mikrodenetleyiciler, transistörler, diyotlar, pasif elemanlar, konnektörler, modüller ve geliştirme kartları tek adetten seri üretim adetlerine kadar satılır. Ürün sayfalarında güncel stok durumunu, fiyatı ve datasheet bağlantısını bulabilirsiniz.

Parça koduyla arama

Üretici parça numarasını yazın; stok ve fiyatı hemen görün.

www.entegreci.com

Ürün kategorileri

Entegreden kapasitöre tüm elektronik komponent kategorileri.

Kategorilere göz atın

Üreticiler

Aradığınız üreticinin ürünlerini tek sayfada inceleyin.

Üreticileri görün

Toplu alım ve teklif

Listede olmayan ya da yüksek adetli parçalar için teklif isteyin.

Teklif isteyin

www.entegreci.com | **destek@entegreci.com** | **0850 305 90 34**

Entegreci is an online electronic components store based in Türkiye. Search by manufacturer part number to see stock, prices and datasheets for integrated circuits, microcontrollers, transistors, passive components and connectors, or request a quote for parts that are not listed.

Bu sayfa Entegreci tarafından eklenmiştir. Belgenin önceki sayfaları asıl yayıncısına aittir ve içeriği değiştirilmemiştir; en güncel sürüm için belgenin yayıncısına başvurun.