

Is Now Part of



ON Semiconductor®

To learn more about ON Semiconductor, please visit our website at
www.onsemi.com

Please note: As part of the Fairchild Semiconductor integration, some of the Fairchild orderable part numbers will need to change in order to meet ON Semiconductor's system requirements. Since the ON Semiconductor product management systems do not have the ability to manage part nomenclature that utilizes an underscore (_), the underscore (_) in the Fairchild part numbers will be changed to a dash (-). This document may contain device numbers with an underscore (_). Please check the ON Semiconductor website to verify the updated device numbers. The most current and up-to-date ordering information can be found at www.onsemi.com. Please email any questions regarding the system integration to Fairchild_questions@onsemi.com.

ON Semiconductor and the ON Semiconductor logo are trademarks of Semiconductor Components Industries, LLC dba ON Semiconductor or its subsidiaries in the United States and/or other countries. ON Semiconductor owns the rights to a number of patents, trademarks, copyrights, trade secrets, and other intellectual property. A listing of ON Semiconductor's product/patent coverage may be accessed at www.onsemi.com/site/pdf/Patent-Marking.pdf. ON Semiconductor reserves the right to make changes without further notice to any products herein. ON Semiconductor makes no warranty, representation or guarantee regarding the suitability of its products for any particular purpose, nor does ON Semiconductor assume any liability arising out of the application or use of any product or circuit, and specifically disclaims any and all liability, including without limitation special, consequential or incidental damages. Buyer is responsible for its products and applications using ON Semiconductor products, including compliance with all laws, regulations and safety requirements or standards, regardless of any support or applications information provided by ON Semiconductor. "Typical" parameters which may be provided in ON Semiconductor data sheets and/or specifications can and do vary in different applications and actual performance may vary over time. All operating parameters, including "Typicals" must be validated for each customer application by customer's technical experts. ON Semiconductor does not convey any license under its patent rights nor the rights of others. ON Semiconductor products are not designed, intended, or authorized for use as a critical component in life support systems or any FDA Class 3 medical devices or medical devices with a same or similar classification in a foreign jurisdiction or any devices intended for implantation in the human body. Should Buyer purchase or use ON Semiconductor products for any such unintended or unauthorized application, Buyer shall indemnify and hold ON Semiconductor and its officers, employees, subsidiaries, affiliates, and distributors harmless against all claims, costs, damages, and expenses, and reasonable attorney fees arising out of, directly or indirectly, any claim of personal injury or death associated with such unintended or unauthorized use, even if such claim alleges that ON Semiconductor was negligent regarding the design or manufacture of the part. ON Semiconductor is an Equal Opportunity/Affirmative Action Employer. This literature is subject to all applicable copyright laws and is not for resale in any manner.

FAIRCHILD SEMICONDUCTOR®

January 2013

FAN302HLMY_F117
PWM Controller for Low Standby Power Battery-Charger Applications — mWSaver™ Technology

Features

- mWSaver™ Technology Provides Industry's Best-in-Class Standby Power
  - Ultra Low Power Consumption at No Load (<10 mW at 230 V_{AC})
  - Proprietary 500V High-Voltage JFET Startup Reduces Startup Resistor Loss
  - Low Operation Current in Burst Mode: 350 µA Maximum
- Constant-Current (CC) Control without Secondary-Feedback Circuitry
- Fixed PWM Frequency at 85kHz with Frequency Hopping to Reduce EMI
- High-Voltage Startup
- Low Operating Current: 3.5 mA
- Peak-Current-Mode Control with Slope Compensation
- Cycle-by-Cycle Current Limiting
- V_{DD} Over-Voltage Protection (Auto-Restart)
- V_S Over-Voltage Protection (Latch Mode)
- V_{DD} Under-Voltage Lockout (UVLO)
- Gate Output Maximum Voltage Clamped at 15 V
- Fixed Over-Temperature Protection (Latch Mode)
- Available in an 8-Lead SOIC Package

Applications

- Battery Chargers for Cellular Phones, Cordless Phones, PDAs, Digital Cameras, and Power Tools
- Replaces Linear Regulators and RCC SMPS

Description

The FAN302HLMY_F117 advanced PWM controller significantly simplifies isolated power supply design that requires CC regulation of the output. The output current is precisely estimated with information in the primary side of the transformer and controlled with an internal compensation circuit. This removes the output current sensing loss and eliminates all external Control Circuitry (CC). The Green-Mode function, with an extremely low operating current (200 µA) in Burst Mode, maximizes the light-load efficiency, enabling conformance to worldwide Standby Mode efficiency guidelines.

Integrated protections include two-level pulse-by-pulse current limit, Over-Voltage Protection (OVP), brownout protection, and Over-Temperature Protection (OTP).

Compared with a conventional approach using an external control circuit in the secondary side for CC regulation, the FAN302HLMY_F117 can reduce total cost, component count, size, and weight; while simultaneously increasing efficiency, productivity, and system reliability.

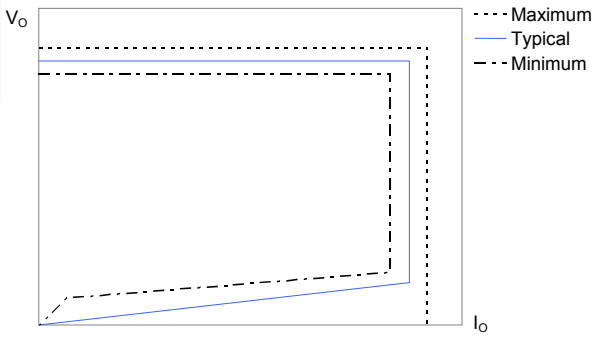

Figure 1. Typical Output V-I Characteristic

Ordering Information

Part Number	Operating Temperature Range	Package	Packing Method
FAN302HLMY_F117	-40°C to +105°C	8-Lead, Small Outline Package (SOIC), JEDEC MS-012, .150-Inch Narrow Body	Tape & Reel

© 2012 Fairchild Semiconductor Corporation

Application Diagram

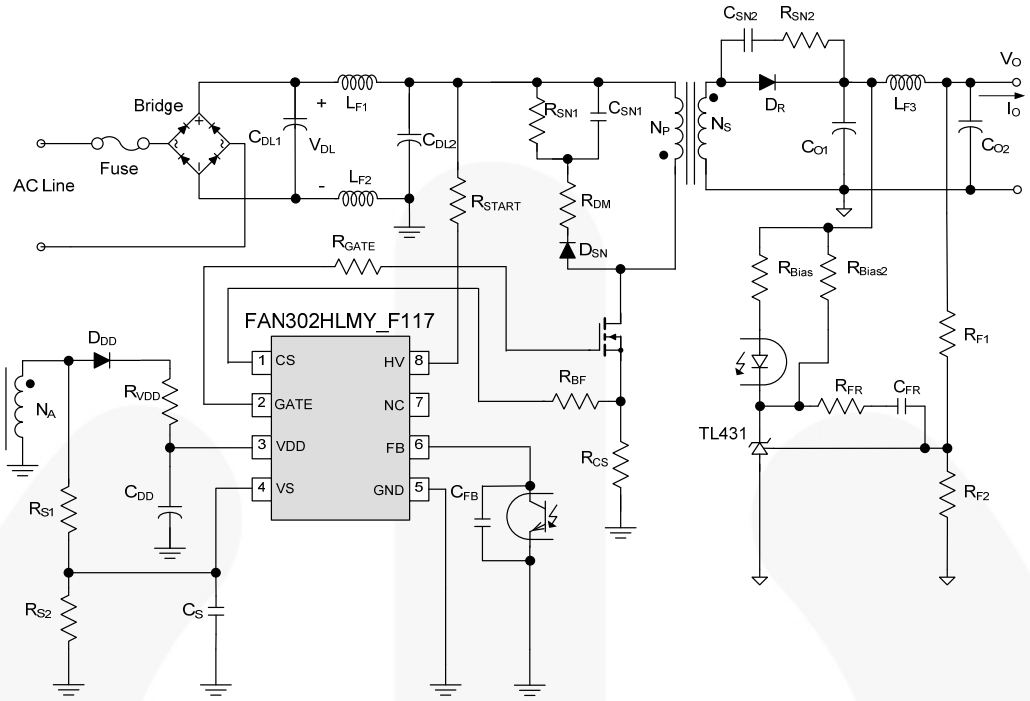

Figure 2. Typical Application

Internal Block Diagram

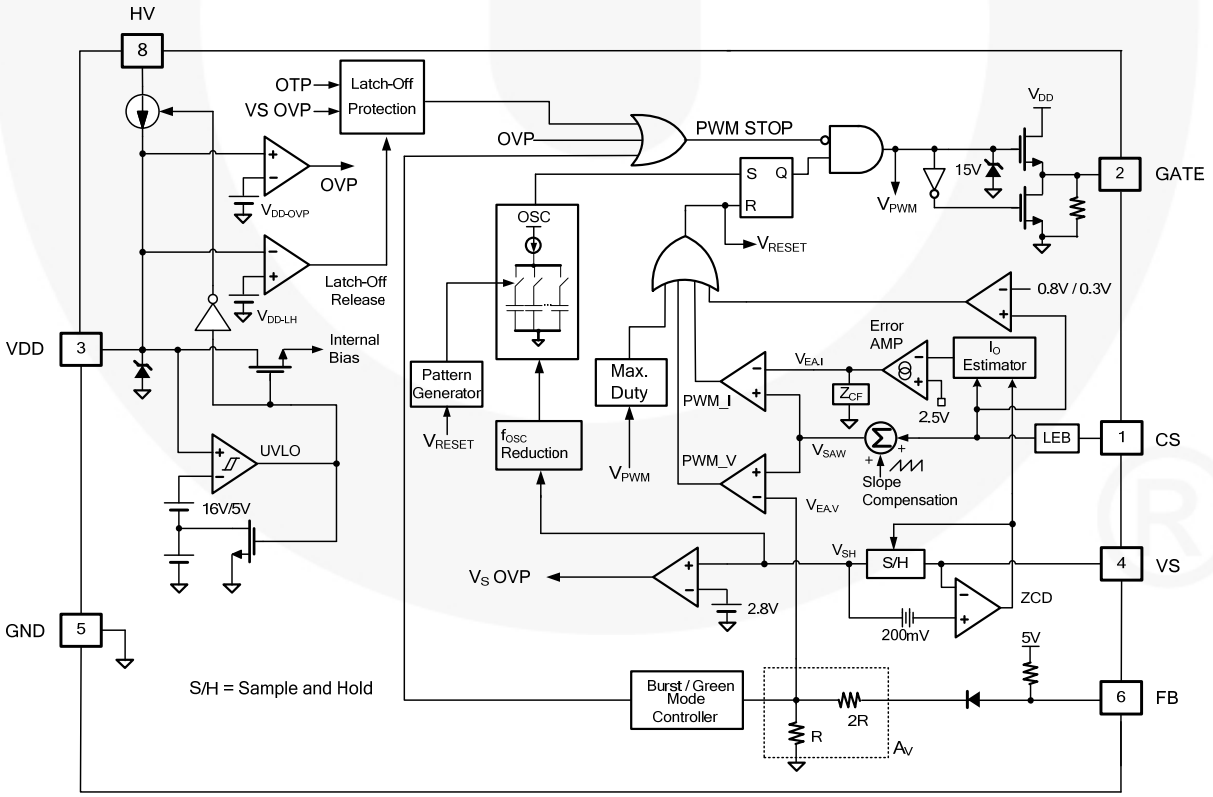

Figure 3. Functional Block Diagram

Marking Information

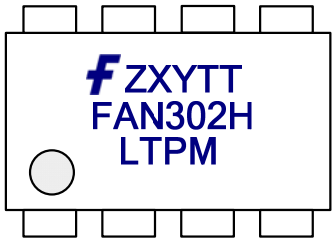

F- Fairchild Logo
Z: Assembly Plant Code
X: Year Code
Y: Week Code
TT: Die Run Code
T: M=SOIC
P: Y= Green Package
M: Manufacture Flow Code

Figure 4.Top Mark

Pin Configuration

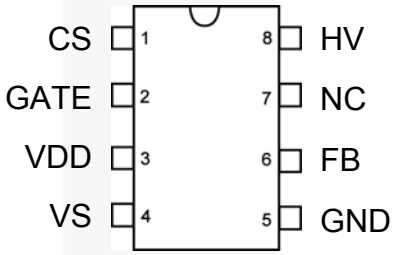

Figure 5. Pin Assignments

Pin Definitions

Pin #	Name	Description
1	CS	**Current Sense**. This pin connects a current-sense resistor to sense the MOSFET current for Peak-Current-Mode control for output regulation. The current-sense information is also used to estimate the output current for CC regulation.
2	GATE	**PWM Signal Output**. This pin has an internal totem-pole output driver to drive the power MOSFET. It is internally clamped at 15 V.
3	VDD	**Power Supply**. IC operating current and MOSFET driving current are supplied through this pin. This pin is typically connected to an external V_{DD} capacitor.
4	VS	**Voltage Sense**. This pin detects the output voltage information and diode current discharge time based on the voltage of the auxiliary winding.
5	GND	**Ground**
6	FB	**Feedback**. Typically, an opto-coupler is connected to this pin to provide feedback information to the internal PWM comparator. This feedback is used to control the duty cycle in CV regulation.
7	NC	No Connect
8	HV	**High Voltage**. This pin connects to the DC bus for high-voltage startup.

© 2012 Fairchild Semiconductor Corporation

Absolute Maximum Ratings

Stresses exceeding the Absolute Maximum Ratings may damage the device. The device may not function or be operable above the recommended operating conditions and stressing the parts to these levels is not recommended. In addition, extended exposure to stresses above the recommended operating conditions may affect device reliability. The absolute maximum ratings are stress ratings only.

Symbol	Parameter		Min.	Max.	Unit
V_{HV}	HV Pin Input Voltage			500	V
V_{VDD}	DC Supply Voltage[1,2]			30	V
V_{VS}	VS Pin Input Voltage		-0.3	7.0	V
V_{CS}	CS Pin Input Voltage		-0.3	7.0	V
V_{FB}	FB Pin Input Voltage		-0.3	7.0	V
P_D	Power Dissipation (T_A=25°C)			660	mW
θ_{JA}	Thermal Resistance (Junction-to-Air)			150	°C/W
θ_{JC}	Thermal Resistance (Junction-to-Case)			39	°C/W
T_J	Operating Junction Temperature		-40	+150	°C
T_{STG}	Storage Temperature Range		-55	+150	°C
T_L	Lead Temperature, (Wave Soldering or IR, 10 Seconds)			+260	°C
ESD	Electrostatic Discharge Capability	Human Body Model, JEDEC:JESD22_A114 (Except HV Pin)[3]		5000	V
		Charged Device Model, JEDEC:JESD22_C101 (Except HV Pin)[3]		1500	

Notes:
1. All voltage values, except differential voltages, are given with respect to GND pin.
2. Stresses beyond those listed under Absolute Maximum Ratings may cause permanent damage to the device.
3. ESD ratings including the HV pin: HBM=400 V, CDM=750 V.

© 2012 Fairchild Semiconductor Corporation

Electrical Characteristics

V_{DD}=15 V and T_A=25°C unless noted.

Symbol	Parameter		Condition	Min.	Typ.	Max.	Unit
HV Section							
V_{HV-MIN}	Minimum Startup Voltage on HV Pin					50	V
I_{HV}	Supply Current Drawn from HV Pin		V_{HV}=100 V, V_{DD}=0 V, Controller Off	0.8	1.5	5.0	mA
I_{HV-LC}	Leakage Current Drawn from HV Pin		V_{HV}=500 V, V_{DD}=15 V (Controller On with Auxiliary Supply)		0.8	3.0	µA
V_{DD} Section							
V_{OP}	Continuous Operation Voltage		Limited by V_{DD} Over-Voltage Protection (OVP)			25	V
V_{DD-ON}	Turn-On Threshold Voltage		V_{DD} Rising	15	16	17	V
V_{DD-OFF}	Turn-Off Threshold Voltage		V_{DD} Falling	4.7	5.0	5.3	V
V_{DD-LH}	Threshold Voltage for Latch-Off Release		V_{DD} Falling		2.5		V
I_{DD-ST}	Startup Current		V_{DD}=V_{DD-ON} – 0.16 V		400	450	µA
I_{DD-OP}	Operating Supply Current		V_{DD}=18 V, f=f_{OSC}, C_{GATE}=1 nF		3.5	4.0	mA
$I_{DD-BURST}$	Burst-Mode Operating Supply Current		V_{DD}=8 V, C_{GATE}=1 nF		200	350	µA
V_{DD-OVP}	V_{DD} Over-Voltage Protection Level			25.0	26.5	28.0	V
$t_{D-VDDOVP}$	V_{DD} Over-Voltage Protection Debounce Time		f=85 kHz		100	180	µs
Oscillator Section							
f_{OSC}	Frequency	Center Frequency	V_{CS}=5 V, V_S=2.5 V, V_{FB}=5 V	82	85	88	kHz
		Hopping Range			±3		
$f_{OSC-CM-MIN}$	Minimum Frequency for Continuous Conduction Mode (CCM) Prevention Circuit[4]			13	18	23	kHz
$f_{OSC-CCM}$	Minimum Frequency in Constant Current (CC) Regulation		V_{CS}=5 V, V_S=0 V	23	26	29	kHz
Feedback Input Section							
A_V	Internal Voltage Scale-Down Ratio of FB Pin[5]			1/3.5	1/3.0	1/2.5	V/V
Z_{FB}	FB Pin Input Impedance			38	42	44	kΩ
$V_{FB-OPEN}$	FB Pin Pull-Up Voltage		FB Pin Open		5.3		V
V_{FB-L}	FB Threshold to Disable Gate Drive in Burst Mode		V_{FB} Falling,V_{CS}=5 V, V_S=0 V	1.2	1.4	1.6	V
V_{FB-H}	FB Threshold to Enable Gate Drive in Burst Mode		V_{FB} Rising,V_{CS}=5 V, V_S=0 V	1.3	1.5	1.7	V
Over-Temperature Protection Section							
T_{OTP}	Threshold for Over-Temperature Protection (OVP)			+130	+140	+150	°C

Continued on the following page…

© 2012 Fairchild Semiconductor Corporation

Electrical Characteristics (Continued)

V_{DD}=15 V and T_A=25°C unless noted.

Symbol	Parameter	Condition	Min.	Typ.	Max.	Unit
Voltage-Sense Section						
I_{TC}	Bias Current	V_{CS}=5 V	8.75	10.00	11.25	µA
$V_{VS-CM-MIN}$	V_S Sampling Voltage to Switch to the Second Pulse-by-Pulse Current Limit in Power Limit Mode(6)			0.55		V
$V_{VS-CM-MAX}$	V_S Sampling Voltage to Switch Back to the Normal Pulse-by-Pulse Current Limit(6)			0.75		V
V_{SN-CC}	V_S Sampling Voltage to Start Frequency Decreasing in CC Mode	V_{CS}=5 V, f_{S1}=f_{OSC}-2 kHz	2.05	2.15	2.25	V
V_{SG-CC}	Vs Sampling Voltage to End Frequency Decreasing in CC Mode	V_{CS}=5 V, f_{S2}=$f_{OSC-CCM}$ +2 kHz	0.45	0.70	0.95	V
S_{G-CC}	Frequency Decreasing Slope of CC Regulation	S_{G-CC}= (f_{S1}-f_{S2}) / (V_{SN-CC}-V_{SG-CC})	30	38	46	kHz/V
$V_{VS-OFFSET}$	ZCD Comparator Internal Offset Voltage(6)			200		mV
V_{VS-OVP}	Output Over-Voltage Protection with V_S Sampling Voltage		2.70	2.80	2.85	V
t_{VS-OVP}	Output Over-Voltage Protection Debounce Time	f_{OSC}=85 kHz		8		cycles
Current-Sense Section						
V_{VR}	Internal Reference Voltage for CC Regulation		2.475	2.500	2.525	V
V_{CCR}	Variation Test Voltage on CS Pin for CC Output (Non-Inverting Input of Error Amplifier for CC Regulation)	V_{CS}=0.47 V	2.405	2.430	2.455	V
V_{STH}	Normal Current Limit Threshold Voltage			0.8		V
V_{STH-VA}	Second Current Limit Threshold Voltage, Power Limit Mode (V_S<$V_{VS-CM-MAX}$)	V_{VS}=0.3 V		0.30		V
t_{PD}	GATE Output Turn-Off Delay			100	150	ns
t_{MIN}	Minimum On Time	V_{CS}=5 V, V_{VS}=2.5 V, V_{FB}=5 V (Test Mode)	430	530	630	ns
t_{LEB}	Leading-Edge Blanking Time(6)		100	150	200	ns
V_{SLOPE}	Slope Compensation(6)	Maximum Duty Cycle		0.3		V
GATE Section						
D_{MAX}	Maximum Duty Cycle		64	67	70	%
V_{GATE-L}	Output Voltage Low	V_{DD}=25 V, I_O=10 mA	0		1.5	V
V_{GATE-H}	Output Voltage High	V_{DD}=8 V, I_O=1 mA	5		8	V
V_{GATE-H}	Output Voltage High	V_{DD}=5.5 V, I_O=1 mA	4.0		5.5	V
t_r	Rising Time	V_{DD}=15 V, C_{GATE}=1 nF	100	140	180	ns
t_f	Falling Time	V_{DD}=15 V, C_{GATE}=1 nF	30	50	70	ns
$V_{GATE-CLAMP}$	Gate Output Clamping Voltage	V_{DD}=25 V	13	15	17	V

Notes:

4. $f_{OSC-CM-MIN}$ occurs when the power unit enters CCM operation.
5. A_V is a scale-down ratio of the internal voltage divider of the FB pin.
6. Guaranteed by design; not production tested.

© 2012 Fairchild Semiconductor Corporation

Typical Performance Characteristics

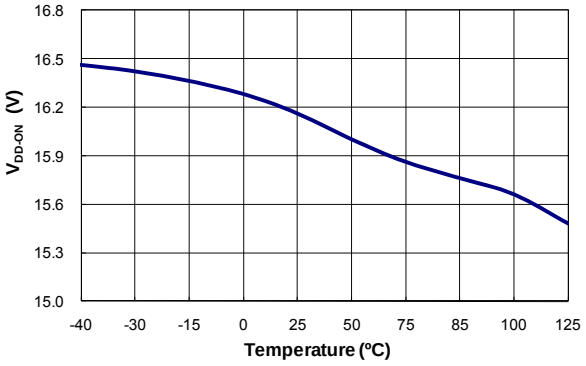

Figure 6. V_{DD} Turn-On Threshold Voltage (V_{DD-ON}) vs. Temperature

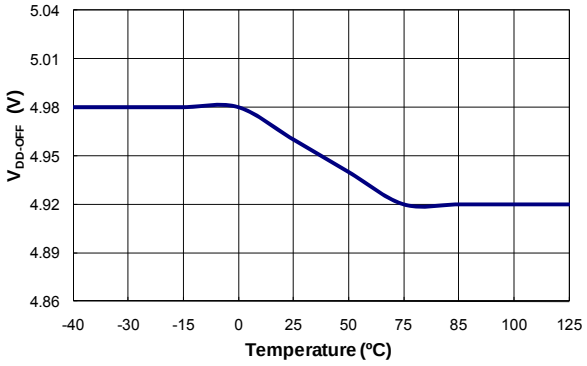

Figure 7. V_{DD} Turn-Off Threshold Voltage (V_{DD-OFF}) vs. Temperature

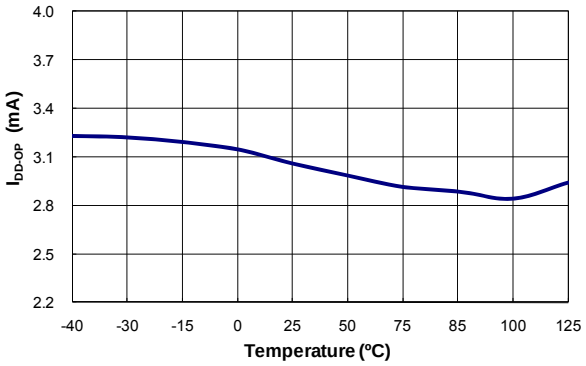

Figure 8. Operating Current (I_{DD-OP}) vs. Temperature

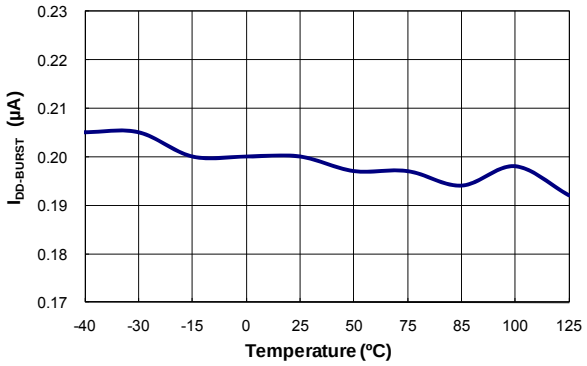

Figure 9. Burst Mode Operating Current ($I_{DD-BURST}$) vs. Temperature

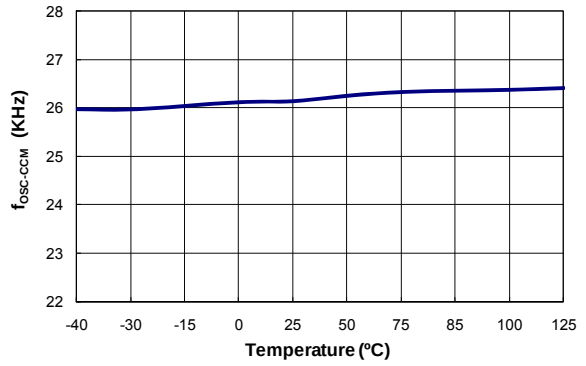

Figure 10. CC Regulation Minimum Frequency ($f_{OSC-CCM}$) vs. Temperature

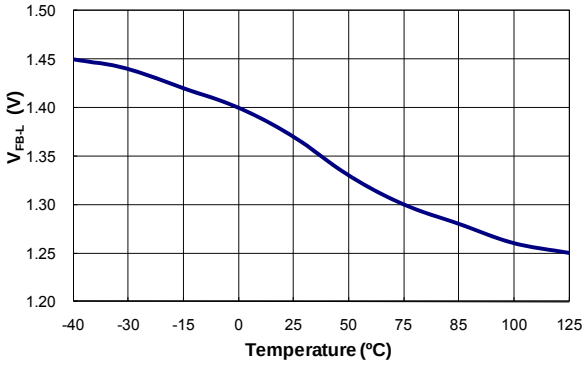

Figure 11. Enter Zero-Duty Cycle of FB Voltage (V_{FB-L}) vs. Temperature

Typical Performance Characteristics

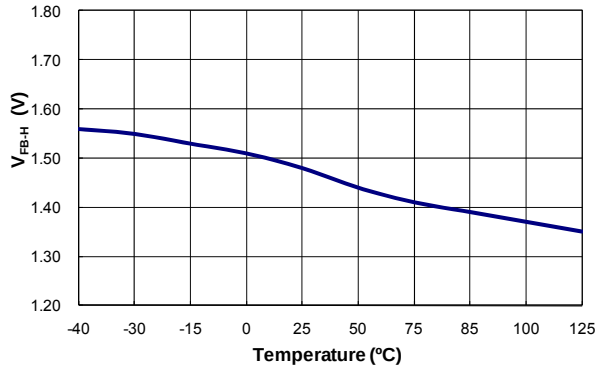

Figure 12. Leave Zero Duty Cycle of FB Voltage (V_{FB-H}) vs. Temperature

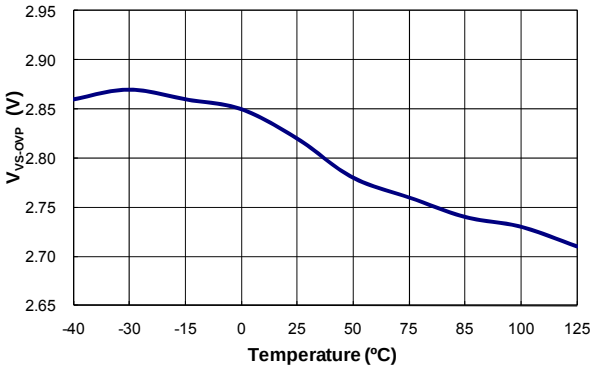

Figure 13. V_S Over-Voltage Protection (V_{VS-OVP}) vs. Temperature

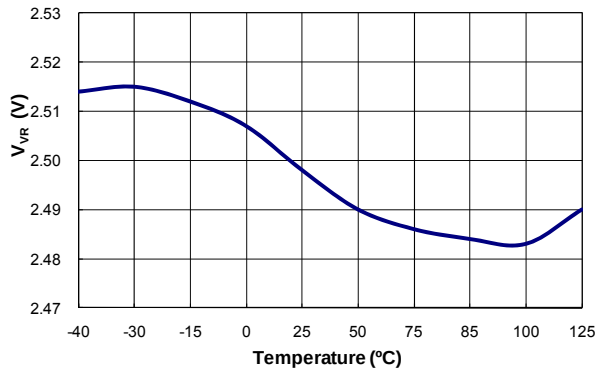

Figure 14. Reference Voltage of CS (V_{VR}) vs. Temperature

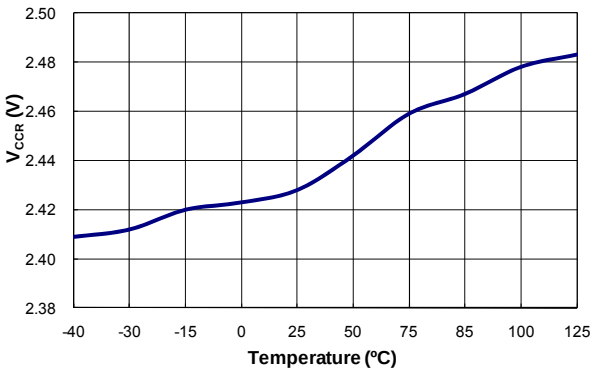

Figure 15.Variation Voltage on CS Pin for Constant-Current Regulation (V_{CCR}) vs. Temperature

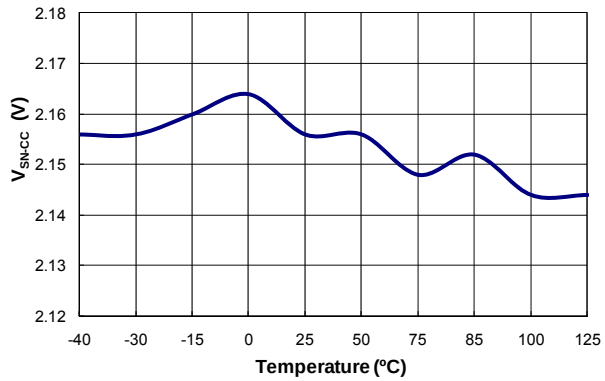

Figure 16. Starting Voltage of Frequency Decreasing of CC Regulation (V_{SN-CC}) vs. Temperature

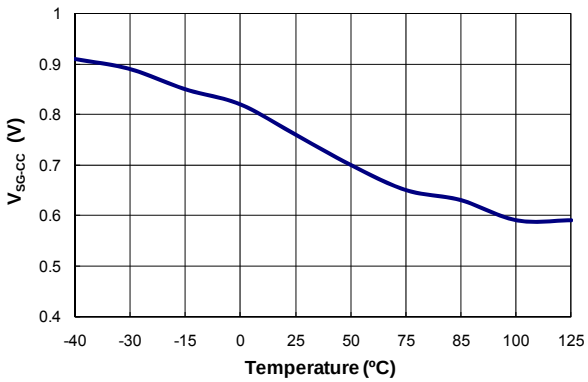

Figure 17. Ending Voltage of Frequency Decreasing of CC Regulation (V_{SG-CC}) vs. Temperature

Typical Performance Characteristics

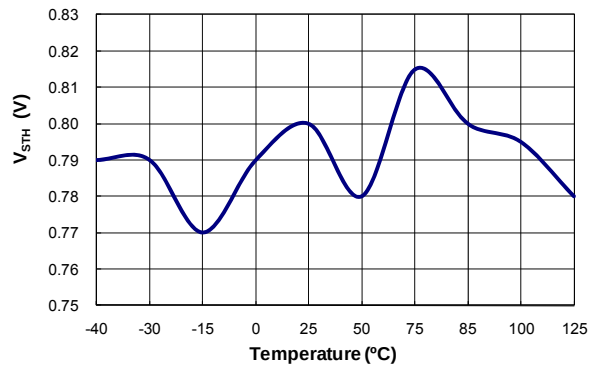

Figure 18. Threshold Voltage for Current Limit (V_{STH}) vs. Temperature

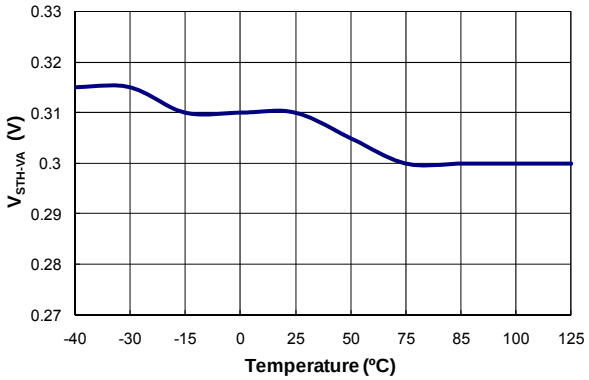

Figure 19. Threshold Voltage for Current Limit at Power Mode (V_{STH-VA}) vs. Temperature

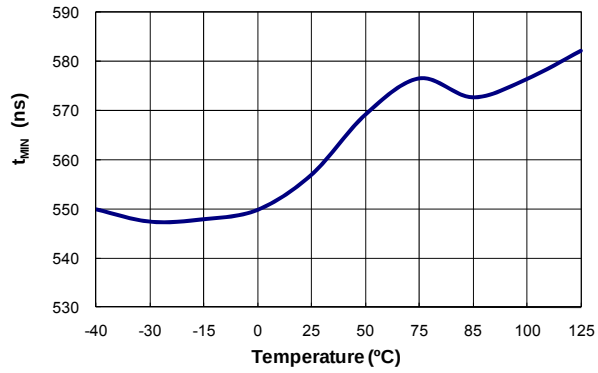

Figure 20. Minimum On Time (t_{MIN}) vs. Temperature

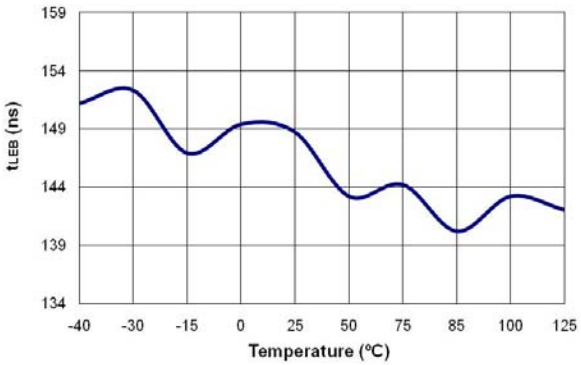

Figure 21.Leading-Edge Blanking Time (t_{LEB}) vs. Temperature

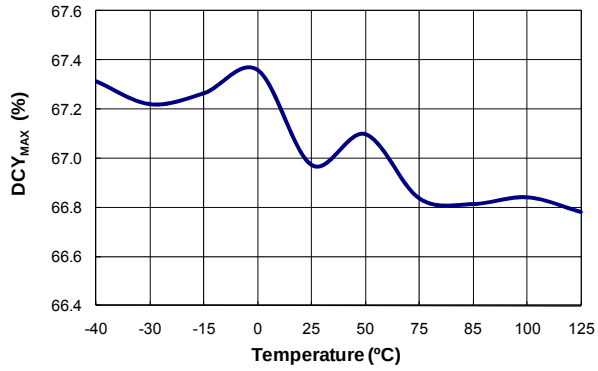

Figure 22. Maximum Duty Cycle (DCY_{MAX}) vs. Temperature

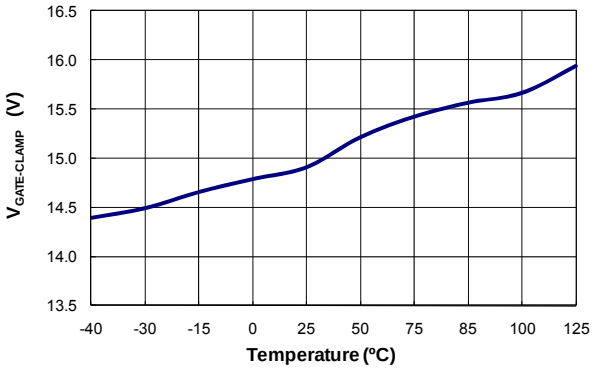

Figure 23. Gate Output Clamp Voltage ($V_{GATE-CLAMP}$) vs. Temperature

Operational Description

Basic Control Principle

Figure 24 shows the internal PWM control circuit. The constant voltage (CV) regulation is implemented in the same way as the conventional isolated power supply, where the output voltage is sensed using a voltage divider and compared with the internal 2.5 V reference of a shunt regulator (KA431) to generate a compensation signal. The compensation signal is transferred to the primary side using an opto-coupler and scaled down through attenuator Av, generating the $V_{EA.V}$ signal. Then the error signal $V_{EA.V}$ is applied to the PWM comparator (PWM.V) to determine the duty cycle.

Meanwhile, the CC regulation is implemented internally without directly sensing the output current. The output current estimator reconstructs output current information (V_{CCR}) using the transformer primary-side current and diode current discharge time. Then V_{CCR} is compared with a reference voltage (2.5 V) by an internal error amplifier, generating the $V_{EA.I}$ signal to determine the duty cycle.

The two error signals, $V_{EA.I}$ and $V_{EA.V}$, are compared with an internal sawtooth waveform (V_{SAW}) by PWM comparators PWM.I and PWM.V to determine the duty cycle. As shown in Figure 25, the outputs of two comparators (PWM.I and PWM.V) are combined with an OR gate and used as a reset signal of flip-flop to determine the MOSFET turn-off instant. The lower signal, $V_{EA.V}$ or $V_{EA.I}$, determines the duty cycle, as shown in Figure 25. During CV regulation, $V_{EA.V}$ determines the duty cycle while $V_{EA.I}$ is saturated to HIGH. During CC regulation, $V_{EA.I}$ determines the duty cycle while $V_{EA.V}$ is saturated to HIGH.

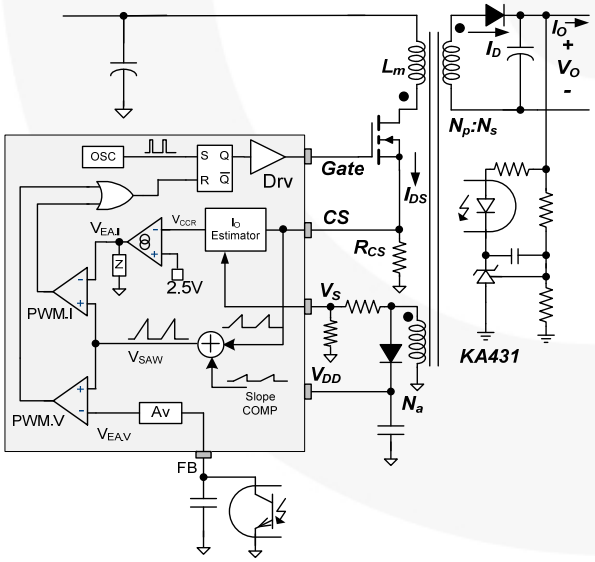

Figure 24. Internal PWM Control Circuit

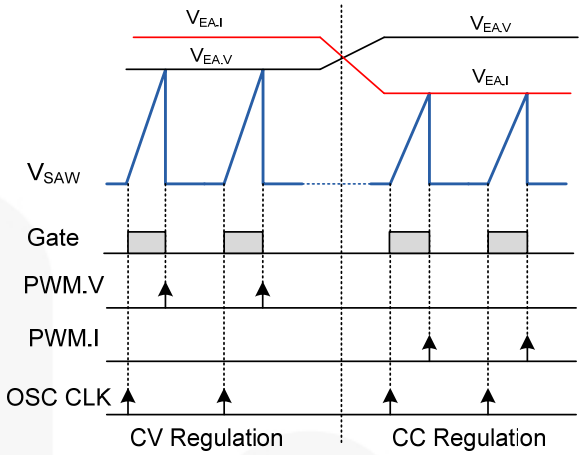

Figure 25. PWM Operation for CC and CV

Output Current Estimation

Figure 26 shows the key waveform of a flyback converter operating in Discontinuous Conduction Mode (DCM), where the secondary-side diode current reaches zero before the next switching cycle begins. Since the output current estimator is designed for DCM operation, the power stage should be designed such that DCM is guaranteed for the entire operating range. The output current is obtained by averaging the triangular output diode current area over a switching cycle:

$$I_O = < I_D >_{AVG} = I_{PK} \frac{N_P}{N_S} \bullet \frac{t_{DIS}}{2t_S} \quad (1)$$

where I_{PK} is the peak value of the primary-side current; N_P and N_S are the number of turns of transformer primary-side and secondary-side, respectively; t_{DIS} is the diode current discharge time; and t_S is the switching period.

With a given current sensing resistor, the output current can be programmed as:

$$I_O = \frac{1.25}{K \bullet R_{SENSE}} \frac{N_P}{N_S} \quad (2)$$

where K is the design parameter of IC, which is 10.5.

The peak value of primary-side current is obtained by an internal peak detection circuit, while diode current discharge time is obtained by detecting the diode current zero-crossing instant. Since the diode current cannot be sensed directly with primary-side control, Zero Crossing Detection (ZCD) is accomplished indirectly by monitoring the auxiliary winding voltage. When the diode current reaches zero, the transformer winding voltage begins to drop by the resonance between the MOSFET output capacitance and the transformer magnetizing inductance. To detect the starting instant of the resonance, the V_S is sampled at 85% of diode current discharge time of the previous switching cycle, then compared with the instantaneous V_S voltage. When instantaneous V_S drops below the sampled voltage by more than 200 mV, ZCD of diode current is obtained, as shown in Figure 27.

© 2012 Fairchild Semiconductor Corporation

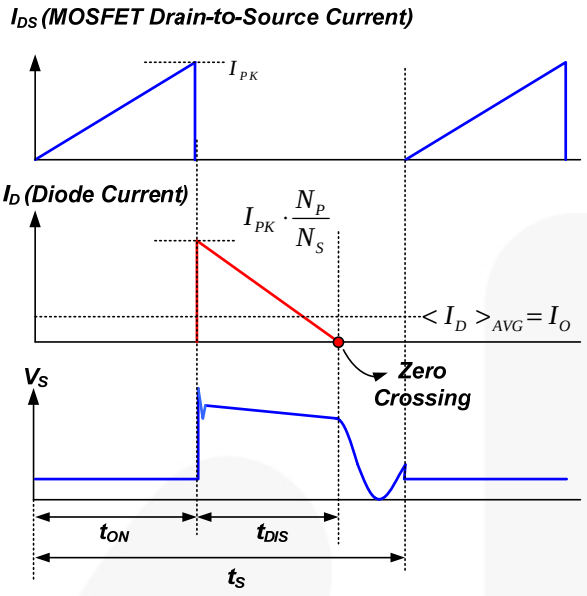

Figure 26. Key Waveforms of DCM Flyback Converter

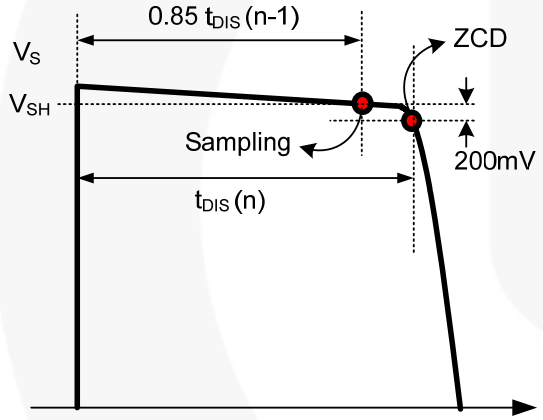

Figure 27. Detailed Waveform for ZCD

Frequency Reduction in CC Mode

An important design consideration is that the transformer guarantee DCM operation across the whole range since the output current is properly estimated only in DCM operation. As can be seen in Figure 28, the discharge time (t_{DIS}) of the diode current increases as the output voltage decreases in CC Mode. The converter tends to go into CCM as output voltage drops in CC Mode when operating at the fixed switching frequency. To prevent this CCM operation while maintaining good output current estimation in DCM, FAN302HLMY_F117 decreases switching frequency as output voltage drops, as shown in Figure 28 and Figure 29. FAN302HLMY_F117 indirectly monitors the output voltage by the sample-and-hold voltage (V_{SH}) of V_S, which is taken at 85% of diode current discharge time of the previous switching cycle, as shown in Figure 27. Figure 30 shows how the frequency reduces as the sample-and-hold voltage of VS decreases.

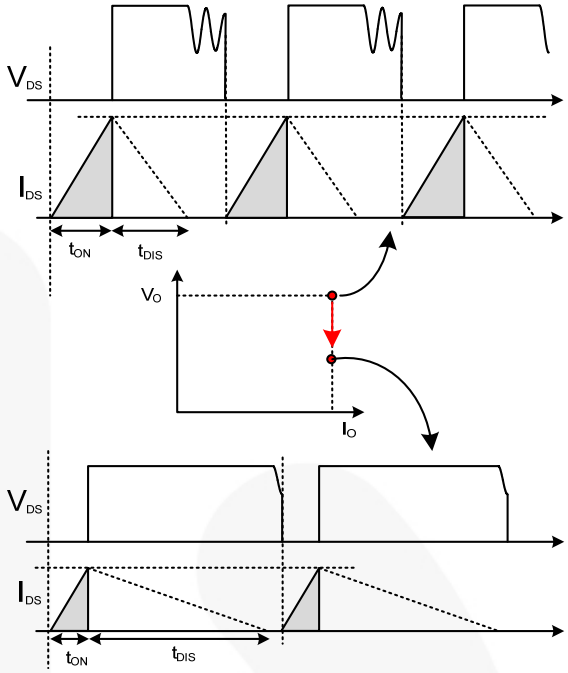

Figure 28. t_{DIS} Variation in CC Mode

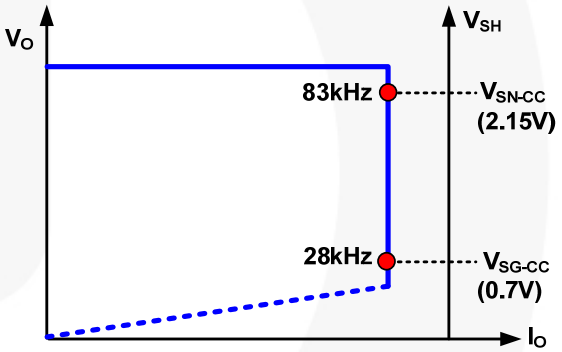

Figure 29. Frequency Reduction with V_{SH}

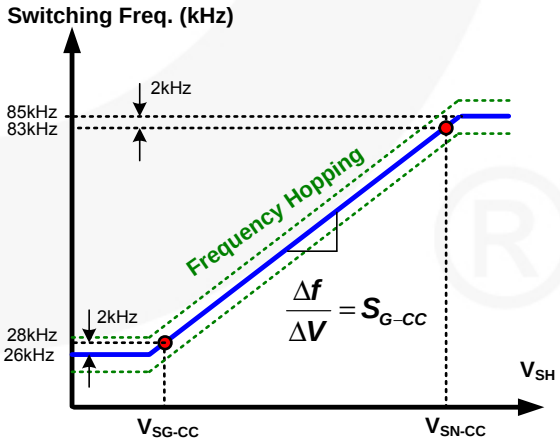

Figure 30. Frequency Reduction Curve in CC Regulation

CCM Prevention Function

Even if the power supply is designed to operate in DCM, it can go into CCM when there is not enough design margin to cover all the circuit parameter variations and operating conditions. FAN302HLMY_F117 has a CCM-prevention function that delays the next cycle turn-on of MOSFET until ZCD on the VS pin is obtained, as shown in Figure 31. To guarantee stable DCM operation, FAN302HLMY_F117 prohibits the turn-on of the next switching cycle for 10% of its switching period after ZCD is obtained. In Figure 31, the first switching cycle has ZCD before 90% of its original switching period and, therefore, the turn-on instant of the next cycle is determined without being affected by the ZCD instant. The second switching cycle does not have ZCD by the end of the original switching period; thus, the turn-on of the third switching cycle occurs after ZCD is obtained, with a delay of 10% of its original switching period. The minimum switching frequency that CCM prevention function allows is 18 kHz ($f_{OSC\text{-}CM\text{-}MIN}$). If the ZCD is not given until the end of maximum switching period of 55.6 µs (1/18 kHz), the converter can go into CCM operation, losing output regulation.

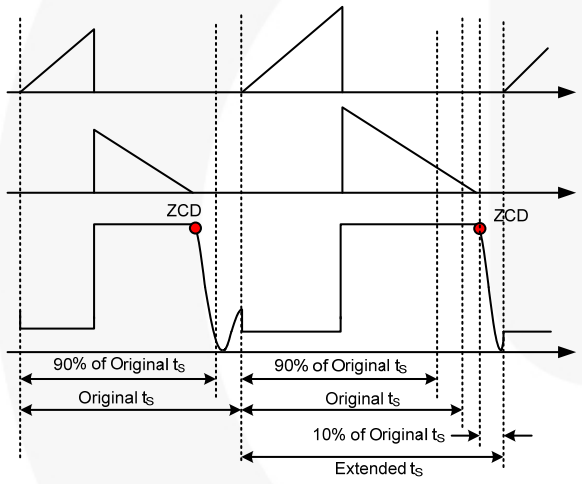

Figure 31. CCM Prevention Function

Power Limit Mode

When the sampled voltage of VS (V_{SH}) drops below $V_{S\text{-}CM\text{-}MIN}$ (0.55 V), FAN302HLMY_F117 enters constant Power Limit Mode, where the primary-side current-limit voltage (V_{CS}) changes from V_{STH} (0.8 V) to $V_{STH\text{-}VA}$ (0.3 V) to avoid V_S sampling and ZCD, as shown in Figure 32. Once V_S sampling voltage is higher than $V_{S\text{-}CM\text{-}MAX}$ (0.75 V), the V_{CS} returns to V_{STH}. This mode prevents the power supply from going into CCM and losing output regulation when the output voltage is too low. This effectively protects the power supply when there is a fault condition in the load, such as output short or overload. This mode also implements soft-start by limiting the transformer current until V_S sampling voltage reaches $V_{S\text{-}CM\text{-}MAX}$ (0.75 V).

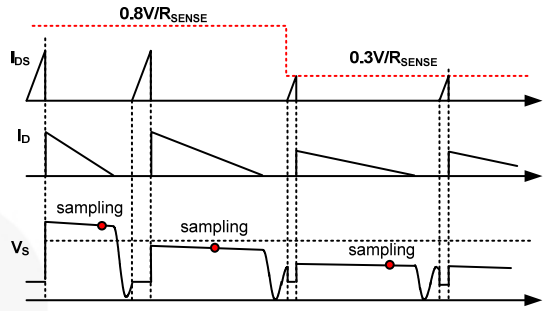

Figure 32. Power Limit Mode Operation

High-Voltage Startup

Figure 33 shows the high-voltage (HV) startup circuit. Internally, JFET is used to implement the high-voltage current source, whose characteristics are shown in Figure 34. Technically, the HV pin can be directly connected to the DC link (V_{DL}). To improve reliability and surge immunity; it is typical to use about a 100 kΩ resistor between the HV pin and the DC link. The actual HV current with given DC link voltage and startup resistor is determined by the intersection of V-I characteristics line and load line, as shown in Figure 34.

During startup, the internal startup circuit is enabled and the DC link supplies the current, I_{HV}, to charge the hold-up capacitor, C_{VDD}, through R_{START}. When the V_{DD} voltage reaches $V_{DD\text{-}ON}$, the internal HV startup circuit is disabled and the IC starts PWM switching. Once the HV startup circuit is disabled, the energy stored in C_{VDD} should supply the IC operating current until the transformer auxiliary winding voltage reaches the nominal value. Therefore, C_{VDD} should be designed to prevent V_{DD} from dropping to $V_{DD\text{-}OFF}$ before the auxiliary winding builds up enough voltage to supply V_{DD}. Capacitance tolerance is an important factor to consider for C_{DD} selection. Connecting a 22 µF capacitor between the V_{DD} and GND pins is recommended to ensure system stability across the wide operation temperature range.

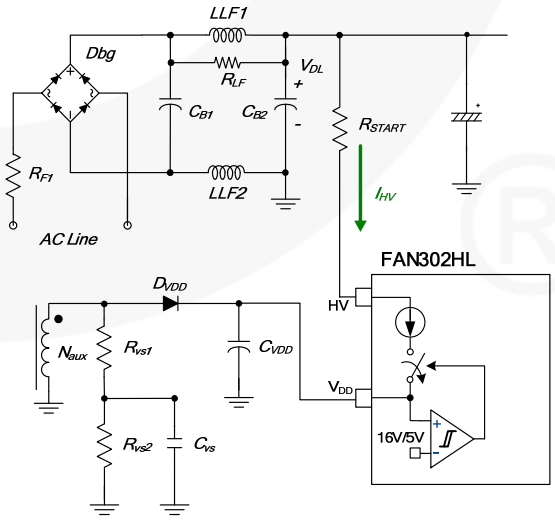

Figure 33. HV Startup Circuit

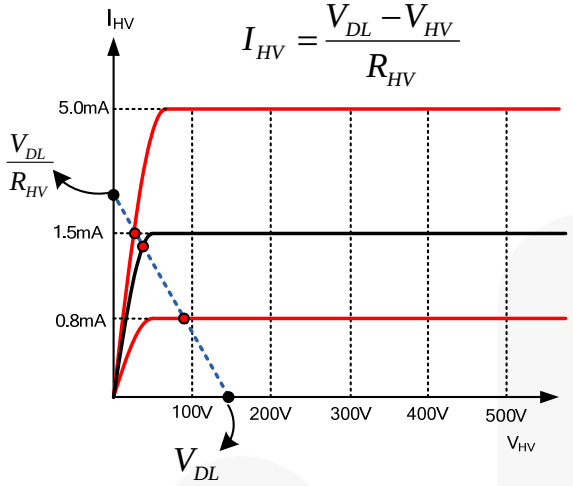

Figure 34.V-I Characteristics of HV Pin

Frequency Hopping

EMI reduction is accomplished by frequency hopping, which spreads the energy over a wider frequency range than the bandwidth of the EMI test equipment. The frequency-hopping circuit changes the switching frequency progressively between 82 kHz and 88 kHz with a period of t_p, as shown in Figure 35.

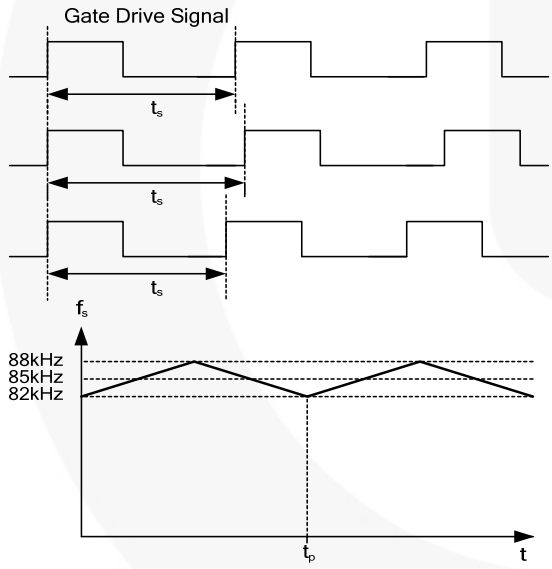

Figure 35. Frequency Hopping

Burst-Mode Operation

The power supply enters Burst Mode at no-load or extremely light-load conditions. As shown in Figure 36, when V_{FB} drops below V_{FBL}; the PWM output shuts off and the output voltage drops at a rate dependent on load current. This causes the feedback voltage to rise. Once V_{FB} exceeds V_{FBH}, the internal circuit starts to provide switching pulse. The feedback voltage then falls and the process repeats. Burst Mode operation alternately enables and disables switching of the MOSFET, reducing the switching losses in Standby Mode. Once FAN302HLMY_F117 enters Burst Mode, the operating current is reduced from 3.5 mA to 200 µA to minimize power consumption.

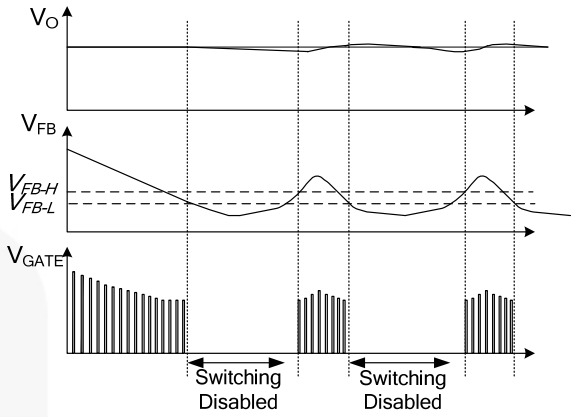

Figure 36. Burst-Mode Operation

Slope Compensation

The sensed voltage across the current-sense resistor is used for Current-Mode control and pulse-by-pulse current limiting. A synchronized ramp signal with positive slope is added to the current sense information at each switching cycle, improving noise immunity of Current-Mode control.

Protections

The self-protection functions include V_{DD} Over-Voltage Protection (OVP), internal Over-Temperature Protection (OTP), V_S Over-Voltage Protection (OVP), and brownout protection. V_{DD} OVP and brownout protection are implemented as Auto-Restart Mode, while the V_S OVP and internal OTP are implemented as Latch Mode.

When an Auto-Restart Mode protection is triggered, switching is terminated and the MOSFET remains off, causing V_{DD} to drop. When V_{DD} drops to the V_{DD} turn-off voltage of 5 V; the protection is reset, the internal startup circuit is enabled, and the supply current drawn from the HV pin charges the hold-up capacitor. When V_{DD} reaches the turn-on voltage of 16 V, normal operation resumes. In this manner, auto-restart alternately enables and disables MOSFET switching until the abnormal condition is eliminated, as shown in Figure 37.

When a Latch Mode protection is triggered, PWM switching is terminated and the MOSFET remains off, causing V_{DD} to drop. When V_{DD} drops to the V_{DD} turn-off voltage of 5 V, the internal startup circuit is enabled without resetting the protection and the supply current drawn from HV pin charges the hold-up capacitor. Since the protection is not reset, the IC does not resume PWM switching even when V_{DD} reaches the turn-on voltage of 16 V, disabling HV startup circuit. Then V_{DD} drops down to 5 V. In this manner, the Latch Mode protection alternately charges and discharges V_{DD} until there is no more energy in the DC link capacitor. The protection is reset when V_{DD} drops to 2.5 V, which is allowed only after the power supply is unplugged from the AC line, as shown in Figure 38.

© 2012 Fairchild Semiconductor Corporation

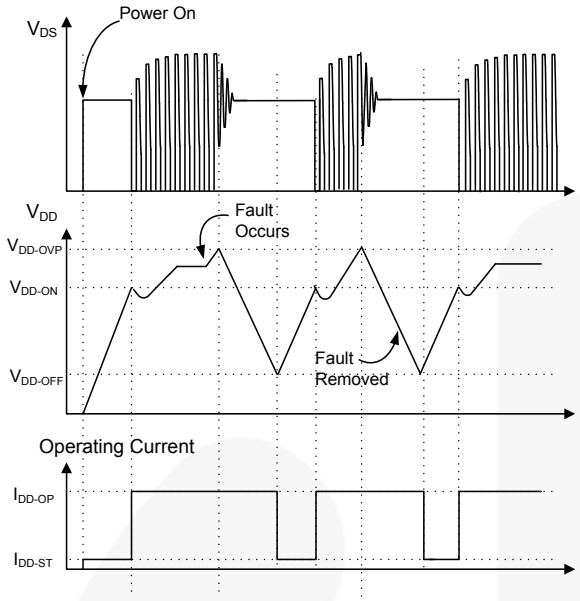

Figure 37. Auto-Restart Mode Operation

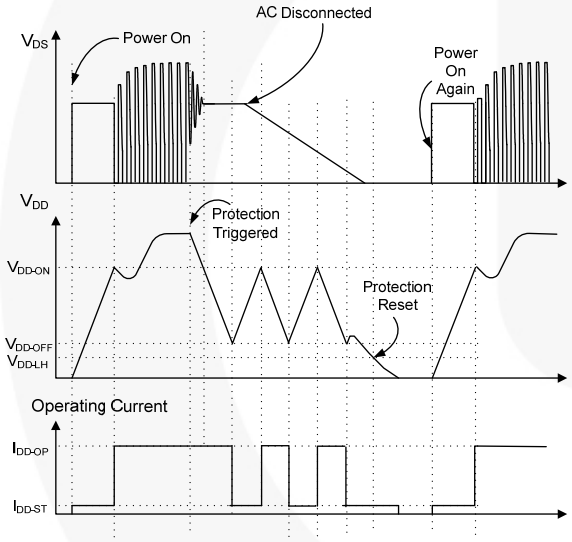

Figure 38. Latch-Mode Operation

Over-Temperature Protection (OTP)

The temperature-sensing circuit shuts down PWM output if the junction temperature exceeds 140°C (t_{OTP}).

V_{DD} Over-Voltage Protection

V_{DD} over-voltage protection prevents IC damage from over-voltage exceeding the IC voltage rating. When the V_{DD} voltage exceeds 26.5 V due to an abnormal condition, the protection is triggered. This protection is typically caused by open circuit in the secondary-side feedback network.

Input Voltage Sensing

The FAN302HL indirectly senses input voltage using the VS pin current while the MOSFET is turned on. Since the VS pin voltage is clamped at 0.7 V when the MOSFET is turned on, the current flowing out of the VS pin is approximately proportional to the input voltage as:

$$I_{VS.ON} = \frac{(\frac{N_A}{N_P} V_{DL} + 0.7)}{R_{VS1}} + \frac{0.7}{R_{VS2}} \cong \frac{N_A}{N_P} \frac{V_{DL}}{R_{VS1}} \quad (3)$$

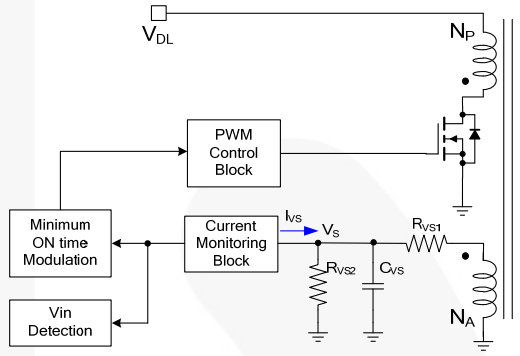

Figure 39. Vs Pin Current Sensing

FAN302HL modulates the minimum on time of the MOSFET such that it reduces as input voltage increases, as shown Figure 40. This allows smaller minimum on time for high line condition, ensuring Burst Mode operation occurs at almost same power level regardless of line voltage variation. The minimum on time is related to the bundle frequency of Burst Mode.

When selecting R_{VS1} and R_{VS2}, 150 µA is the VS current level to consider seriously. If the VS current is lower than 150 µA, t_{on_min} won't be larger.

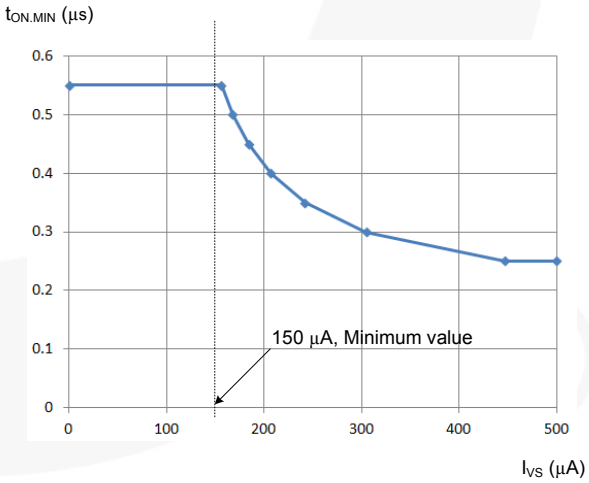

Figure 40. Minimum On Time vs. VS Pin Current

V_S Over-Voltage Protection (OVP)

V_S over-voltage protection prevents damage due to output over-voltage conditions. Figure 41 shows the VS OVP protection method. The OVP is triggered when the V_S sampling voltage is above 2.8 V (V_{VS_OVP}) for longer than eight switching cycles. Then PWM pulses are disabled and FAN302HL enters Latch Mode. The protection is reset and normal operation resumes when V_{DD} drops below $V_{DD\text{-}LH}$. V_S over-voltage conditions are usually caused by an open circuit in the secondary-side feedback network or abnormal behavior by the VS pin divider resistor.

When the secondary-side feedback circuit is opened, no current flows through the opto-coupler diode, which pulls up the feedback voltage, commanding maximum power be delivered to the load. Since more power than the load demand is delivered, the output voltage rises until the OVP is triggered.

The worst-case OVP trip point at no load is calculated as:

$$V_O^{OVP} = \sqrt{\left[V_{VS_OVP}\frac{N_S}{N_A}\frac{R_{VS1}+R_{VS2}}{R_{VS2}}\right]^2 + \frac{2E_{SURPLUS}}{C_O}} \qquad (4)$$

where $E_{SURPLUS}$ is the surplus energy delivered to the load during the debounce time.

The $E_{SURPLUS}$ can be defined as:

$$E_{SURPLUS} = \frac{L_m}{2}\left(\frac{V_{STH}}{R_{CS}} + \frac{V_{DL}}{L_m}(t_{DLY.OFF})\right)^2 \times 8 \qquad (5)$$

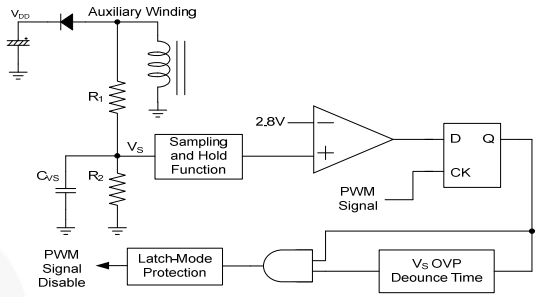

Figure 41. V_S OVP Protection

Leading-Edge Blanking (LEB)

Each time the power MOSFET is switched on, a turn-on spike occurs at the sense resistor. To avoid premature termination of the switching pulse, a 150 ns leading-edge blanking time is built in. Conventional RC filtering can therefore be omitted. During this blanking period, the current-limit comparator is disabled and it cannot switch off the gate driver.

Noise Immunity

Noise from the current sense or the control signal can cause significant pulse-width jitter. While slope compensation helps alleviate these problems, further precautions should still be taken. Good placement and layout practices should be followed. Avoid long PCB traces and component leads. Locate bypass filter components near the PWM IC.

Typical Application Circuit (Flyback Charger)

Application	Fairchild Device	Input Voltage Range	Output
Cell Phone Charger	FAN302HLMY_F117	90~265 V_{AC}	5 V/1.2 A (6 W)

Features

- High Efficiency (>71% Avg.), Meets Energy Star V2.0 Standard (Avg. 68.17%)
- Ultra-Low Standby Power Consumption, <10 mW at 230 V_{AC} (Pin=6.3 mW for 115 V_{AC} and Pin=7.3 mW for 230 V_{AC})
- Output Regulation: CV= ±5%, CC= ±15%

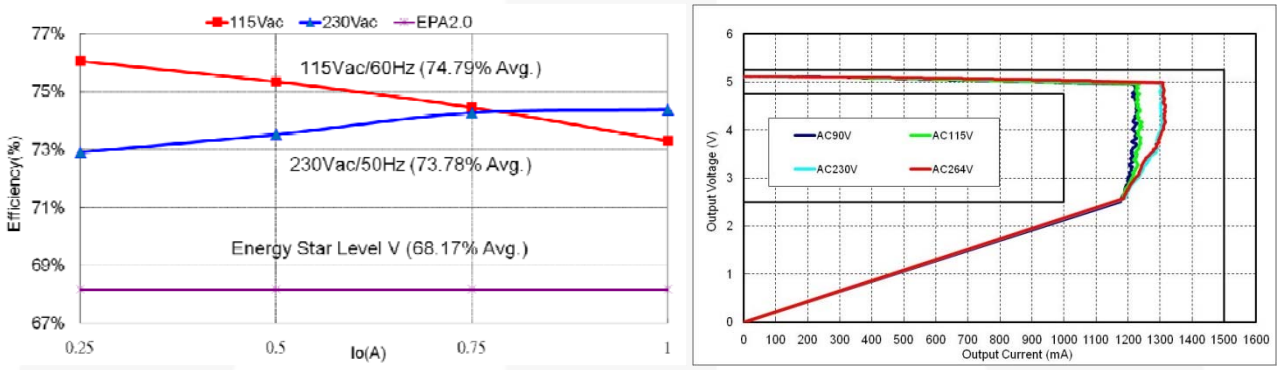

Figure 42. Measured Efficiency and Output Regulation

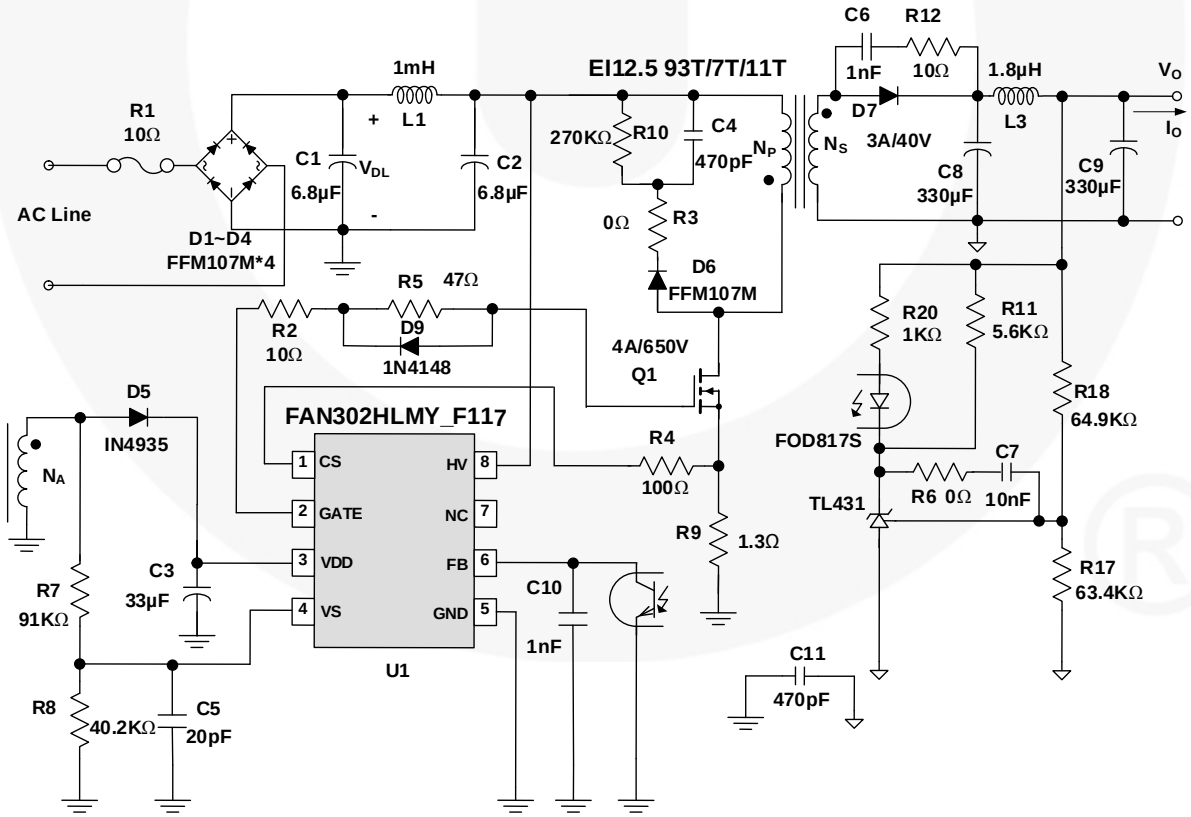

Figure 43.Schematic of Typical Application Circuit

Typical Application Circuit (Continued)

Transformer Specification

- Core: EI12.5
- Bobbin: EI12.5

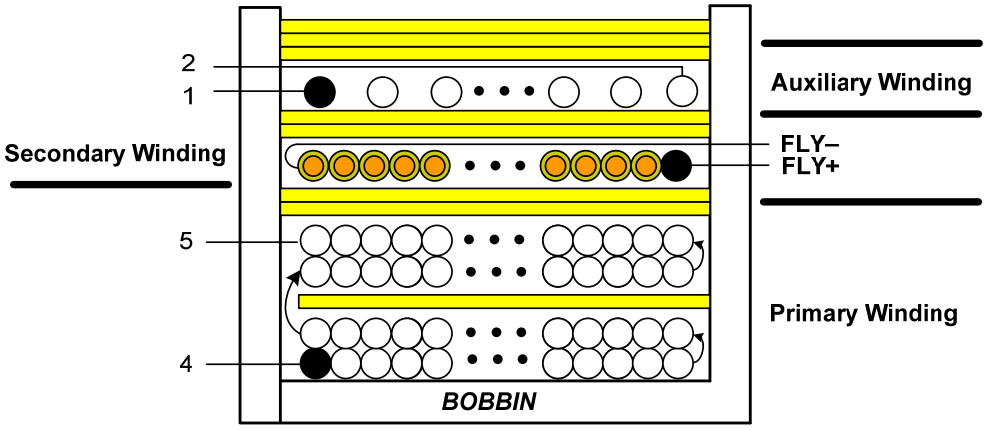

Figure 44.Transformer

Notes:

7. W1 consists of four layers with different number of turns. The number of turns of each layer is specified in Table 1. Add one insulation tape between the second and third layers.
8. W2 consists of two layers with triple-insulated wire. The leads of positive and negative fly lines are 3.5 cm and 2.5 cm, respectively.
9. W3 is space winding in one layer.

Table 1. Transformer Winding Specifications

NO.	Terminal		Wire	Turns	Insulation
	Start Pin	End Pin			Turns
W1	4	5	2UEW 0.1*1	26	0
				25	1
				24	0
				18	2
W2	Fly+	Fly-	TEX-E 0.45*1	7	2
W3	1	2	2UEW 0.18*1	11	2
			Core Rounding Tape		3
			Core		0
W4	2		2UEW 0.18*1	5	2

Note:

10. W4 is the outermost and space winding.

	Pin	Specifications	Remark
Primary-Side Inductance	4－5	700 μH ±7%	100 kHz, 1 V
Primary-Side Leakage Inductance	4－5	130 μH ±7%	Short One of the Secondary-Side Windings

Physical Dimensions

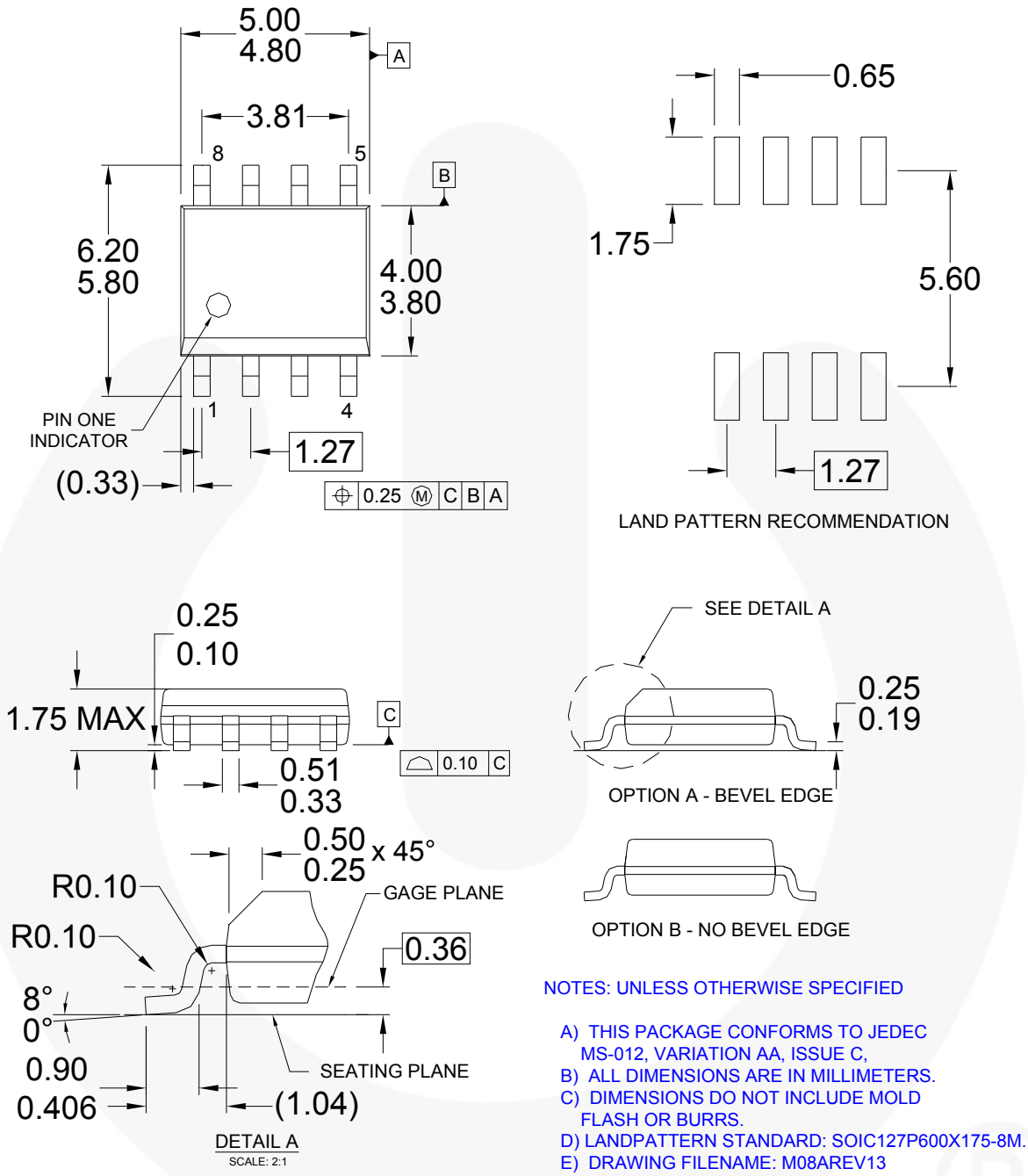

Figure 45. 8-Lead, Small Outline Package (SOIC), JEDEC MS-012, .150-Inch, Narrow Body

Package drawings are provided as a service to customers considering Fairchild components. Drawings may change in any manner without notice. Please note the revision and/or date on the drawing and contact a Fairchild Semiconductor representative to verify or obtain the most recent revision. Package specifications do not expand the terms of Fairchild's worldwide terms and conditions, specifically the warranty therein, which covers Fairchild products.

Always visit Fairchild Semiconductor's online packaging area for the most recent package drawings:
http://www.fairchildsemi.com/packaging/.

© 2012 Fairchild Semiconductor Corporation

FAIRCHILD SEMICONDUCTOR®

TRADEMARKS

The following includes registered and unregistered trademarks and service marks, owned by Fairchild Semiconductor and/or its global subsidiaries, and is not intended to be an exhaustive list of all such trademarks.

2Cool™
AccuPower™
AX-CAP®*
BitSiC™
Build it Now™
CorePLUS™
CorePOWER™
CROSSVOLT™
CTL™
Current Transfer Logic™
DEUXPEED®
Dual Cool™
EcoSPARK®
EfficientMax™
ESBC™
Fairchild®
Fairchild Semiconductor®
FACT Quiet Series™
FACT®
FAST®
FastvCore™
FETBench™
FPS™
F-PFS™
FRFET®
Global Power Resource℠
GreenBridge™
Green FPS™
Green FPS™ e-Series™
Gmax™
GTO™
IntelliMAX™
ISOPLANAR™
Making Small Speakers Sound Louder and Better™
MegaBuck™
MICROCOUPLER™
MicroFET™
MicroPak™
MicroPak2™
MillerDrive™
MotionMax™
mWSaver™
OptoHiT™
OPTOLOGIC®
OPTOPLANAR®
PowerTrench®
PowerXS™
Programmable Active Droop™
QFET®
QS™
Quiet Series™
RapidConfigure™
Saving our world, 1mW/W/kW at a time™
SignalWise™
SmartMax™
SMART START™
Solutions for Your Success™
SPM®
STEALTH™
SuperFET®
SuperSOT™-3
SuperSOT™-6
SuperSOT™-8
SupreMOS®
SyncFET™
Sync-Lock™
SYSTEM GENERAL®*
TinyBoost™
TinyBuck™
TinyCalc™
TinyLogic®
TINYOPTO™
TinyPower™
TinyPWM™
TinyWire™
TranSiC™
TriFault Detect™
TRUECURRENT®*
μSerDes™
UHC®
Ultra FRFET™
UniFET™
VCX™
VisualMax™
VoltagePlus™
XS™

* Trademarks of System General Corporation, used under license by Fairchild Semiconductor.

DISCLAIMER

FAIRCHILD SEMICONDUCTOR RESERVES THE RIGHT TO MAKE CHANGES WITHOUT FURTHER NOTICE TO ANY PRODUCTS HEREIN TO IMPROVE RELIABILITY, FUNCTION, OR DESIGN. FAIRCHILD DOES NOT ASSUME ANY LIABILITY ARISING OUT OF THE APPLICATION OR USE OF ANY PRODUCT OR CIRCUIT DESCRIBED HEREIN; NEITHER DOES IT CONVEY ANY LICENSE UNDER ITS PATENT RIGHTS, NOR THE RIGHTS OF OTHERS. THESE SPECIFICATIONS DO NOT EXPAND THE TERMS OF FAIRCHILD'S WORLDWIDE TERMS AND CONDITIONS, SPECIFICALLY THE WARRANTY THEREIN, WHICH COVERS THESE PRODUCTS.

LIFE SUPPORT POLICY

FAIRCHILD'S PRODUCTS ARE NOT AUTHORIZED FOR USE AS CRITICAL COMPONENTS IN LIFE SUPPORT DEVICES OR SYSTEMS WITHOUT THE EXPRESS WRITTEN APPROVAL OF FAIRCHILD SEMICONDUCTOR CORPORATION.

As used herein:

1. Life support devices or systems are devices or systems which, (a) are intended for surgical implant into the body or (b) support or sustain life, and (c) whose failure to perform when properly used in accordance with instructions for use provided in the labeling, can be reasonably expected to result in a significant injury of the user.
2. A critical component in any component of a life support, device, or system whose failure to perform can be reasonably expected to cause the failure of the life support device or system, or to affect its safety or effectiveness.

ANTI-COUNTERFEITING POLICY

Fairchild Semiconductor Corporation's Anti-Counterfeiting Policy. Fairchild's Anti-Counterfeiting Policy is also stated on our external website, www.fairchildsemi.com, under Sales Support.

Counterfeiting of semiconductor parts is a growing problem in the industry. All manufacturers of semiconductor products are experiencing counterfeiting of their parts. Customers who inadvertently purchase counterfeit parts experience many problems such as loss of brand reputation, substandard performance, failed applications, and increased cost of production and manufacturing delays. Fairchild is taking strong measures to protect ourselves and our customers from the proliferation of counterfeit parts. Fairchild strongly encourages customers to purchase Fairchild parts either directly from Fairchild or from Authorized Fairchild Distributors who are listed by country on our web page cited above. Products customers buy either from Fairchild directly or from Authorized Fairchild Distributors are genuine parts, have full traceability, meet Fairchild's quality standards for handling and storage and provide access to Fairchild's full range of up-to-date technical and product information. Fairchild and our Authorized Distributors will stand behind all warranties and will appropriately address any warranty issues that may arise. Fairchild will not provide any warranty coverage or other assistance for parts bought from Unauthorized Sources. Fairchild is committed to combat this global problem and encourage our customers to do their part in stopping this practice by buying direct or from authorized distributors.

PRODUCT STATUS DEFINITIONS

Definition of Terms

Datasheet Identification	Product Status	Definition
Advance Information	Formative / In Design	Datasheet contains the design specifications for product development. Specifications may change in any manner without notice.
Preliminary	First Production	Datasheet contains preliminary data; supplementary data will be published at a later date. Fairchild Semiconductor reserves the right to make changes at any time without notice to improve design.
No Identification Needed	Full Production	Datasheet contains final specifications. Fairchild Semiconductor reserves the right to make changes at any time without notice to improve the design.
Obsolete	Not In Production	Datasheet contains specifications on a product that is discontinued by Fairchild Semiconductor. The datasheet is for reference information only.

Rev. I64

© 2012 Fairchild Semiconductor Corporation

ON Semiconductor and ON are trademarks of Semiconductor Components Industries, LLC dba ON Semiconductor or its subsidiaries in the United States and/or other countries. ON Semiconductor owns the rights to a number of patents, trademarks, copyrights, trade secrets, and other intellectual property. A listing of ON Semiconductor's product/patent coverage may be accessed at www.onsemi.com/site/pdf/Patent−Marking.pdf. ON Semiconductor reserves the right to make changes without further notice to any products herein. ON Semiconductor makes no warranty, representation or guarantee regarding the suitability of its products for any particular purpose, nor does ON Semiconductor assume any liability arising out of the application or use of any product or circuit, and specifically disclaims any and all liability, including without limitation special, consequential or incidental damages. Buyer is responsible for its products and applications using ON Semiconductor products, including compliance with all laws, regulations and safety requirements or standards, regardless of any support or applications information provided by ON Semiconductor. "Typical" parameters which may be provided in ON Semiconductor data sheets and/or specifications can and do vary in different applications and actual performance may vary over time. All operating parameters, including "Typicals" must be validated for each customer application by customer's technical experts. ON Semiconductor does not convey any license under its patent rights nor the rights of others. ON Semiconductor products are not designed, intended, or authorized for use as a critical component in life support systems or any FDA Class 3 medical devices or medical devices with a same or similar classification in a foreign jurisdiction or any devices intended for implantation in the human body. Should Buyer purchase or use ON Semiconductor products for any such unintended or unauthorized application, Buyer shall indemnify and hold ON Semiconductor and its officers, employees, subsidiaries, affiliates, and distributors harmless against all claims, costs, damages, and expenses, and reasonable attorney fees arising out of, directly or indirectly, any claim of personal injury or death associated with such unintended or unauthorized use, even if such claim alleges that ON Semiconductor was negligent regarding the design or manufacture of the part. ON Semiconductor is an Equal Opportunity/Affirmative Action Employer. This literature is subject to all applicable copyright laws and is not for resale in any manner.

PUBLICATION ORDERING INFORMATION

LITERATURE FULFILLMENT:
Literature Distribution Center for ON Semiconductor
19521 E. 32nd Pkwy, Aurora, Colorado 80011 USA
Phone: 303−675−2175 or 800−344−3860 Toll Free USA/Canada
Fax: 303−675−2176 or 800−344−3867 Toll Free USA/Canada
Email: orderlit@onsemi.com

N. American Technical Support: 800−282−9855 Toll Free USA/Canada
Europe, Middle East and Africa Technical Support:
Phone: 421 33 790 2910
Japan Customer Focus Center
Phone: 81−3−5817−1050

ON Semiconductor Website: **www.onsemi.com**

Order Literature: http://www.onsemi.com/orderlit

For additional information, please contact your local Sales Representative

ENTEGRECİ

Bu belge www.entegreci.com üzerinden sunulmaktadır.

Elektronik komponent tedarikinde Entegreci

Entegreci, Eskişehir merkezli, Türkiye geneline satış yapan bir elektronik komponent mağazasıdır. Entegreler (IC), mikrodenetleyiciler, transistörler, diyotlar, pasif elemanlar, konnektörler, modüller ve geliştirme kartları tek adetten seri üretim adetlerine kadar satılır. Ürün sayfalarında güncel stok durumunu, fiyatı ve datasheet bağlantısını bulabilirsiniz.

Parça koduyla arama

Üretici parça numarasını yazın; stok ve fiyatı hemen görün.

www.entegreci.com

Ürün kategorileri

Entegreden kapasitöre tüm elektronik komponent kategorileri.

Kategorilere göz atın

Üreticiler

Aradığınız üreticinin ürünlerini tek sayfada inceleyin.

Üreticileri görün

Toplu alım ve teklif

Listede olmayan ya da yüksek adetli parçalar için teklif isteyin.

Teklif isteyin

www.entegreci.com | **destek@entegreci.com** | **0850 305 90 34**

Entegreci is an online electronic components store based in Türkiye. Search by manufacturer part number to see stock, prices and datasheets for integrated circuits, microcontrollers, transistors, passive components and connectors, or request a quote for parts that are not listed.

Bu sayfa Entegreci tarafından eklenmiştir. Belgenin önceki sayfaları asıl yayıncısına aittir ve içeriği değiştirilmemiştir; en güncel sürüm için belgenin yayıncısına başvurun.