42-V 300-mA Low-dropout Linear Regulator with Accurate Current Sense and Protection

Features

- Qualified for Automotive Applications
  - AEC-Q100 Grade 1, T_A: −40°C to +125°C
  - Junction Temperature, T_J: −40°C to +150°C
- Input Voltage: 4.5 V to 42 V, with 45-V Transient
- Output Voltage: Adjustable from 1.5 V to 20 V
- ±2% Output Accuracy over Line Regulation, Load Regulation, and Operating Temperature Range
- 300-mA Maximum Output Current for Each Channel
- Low Dropout Voltage: 500-mV Maximum at 100-mA Load Current
- 5-µA Shutdown Current when EN is Low
- Accurate Current Sense and Diagnosis:
  - Open Load, Overcurrent and Short-circuit Detection
  - High Accuracy: ±3% @ I_{OUT} > 100mA
  - Multiplexing Current Sense to Save ADC Resource
- Input and Output Protections:
  - Reverse Battery Polarity Protection
  - Output Short-Circuit to Ground and Over Current Protection
  - Reverse Current and Short-to-Battery Protection
  - Output Inductive Load Clamp
  - Over Temperature Protection
- Stable with Wide Output Capacitor Range
  - Capacitance from 2.2 µF to 100 µF
  - ESR from 0.001 Ω to 5 Ω
- Package Options: ETSSOP16

Applications

- Automotive Infotainment Active Antenna Power Supply
- Automotive Telematics Active Antenna Power Supply
- Automotive Surround View Camera Power Supply

Description

The TPL8771Q is a 1-channel wide-input-voltage low-dropout linear regulator integrated with output current sense and diagnosis function. This device supports operating voltage range from 4.5 V to 42 V, with a maximum transient voltage of 45 V.

The TPL8771Q has one adjustable output. Connect an external resistor divider, and the output voltage can be set from 1.5 V to 20 V for each channel separately. The output current is 300 mA, which is suitable for the phantom power or low-noise active antenna power in automotive.

The TPL8771Q offers the SENSE pin for current sensing. During normal operation, the output current can be obtained by measuring the voltage at the SENSE pin, for which the sense pin current is proportional to the current flow through the internal power MOS. Besides, by monitoring the sense pin voltage, it is easy to distinguish different faults, such as open load, overload, output short-circuit to ground, over temperature, reverse current or output short-circuit to battery, and reverse input polarity.

The TPL8771Q provides an ETSSOP16 package with a thermal pad and is guaranteed to operate with the ambient temperature range from –40°C to +125°C.

Typical Application Circuit

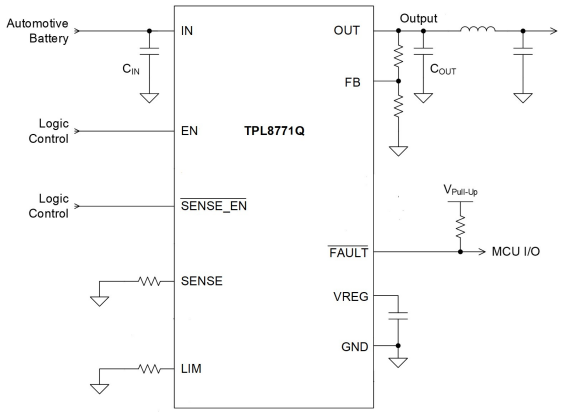

Table of Contents

Features 1
Applications 1
Description 1
Typical Application Circuit 1
Product Family Table 3
Revision History 3
Pin Configuration and Functions 4
Specifications 5
Absolute Maximum Ratings 5
ESD, Electrostatic Discharge Protection 5
Recommended Operating Conditions 5
Thermal Information 6
Electrical Characteristics 7
Typical Performance Characteristics 10
Detailed Description 12
Overview 12
Functional Block Diagram 12
Feature Description 13
Application and Implementation 15
Application Information 15
Typical Application 15
Layout 17
Layout Guideline 17
Layout Example 17
Tape and Reel Information 18
Package Outline Dimensions 19
ETSSOP16 19
Order Information 20
IMPORTANT NOTICE AND DISCLAIMER 21

Product Family Table

Order Number	Output Voltage (V)	Package
TPL8771Q-TSBR-S	1.5 V to 20 V	ETSSOP16

Revision History

Date	Revision	Notes
2025-07-07	Rev.A.0	Initial released
2026-09-28	Rev.A.1	Corrected Pin Configuration and Functions，the actual product remains unchanged

Pin Configuration and Functions

TPL8771Q
ETSSOP16 Package
Top View

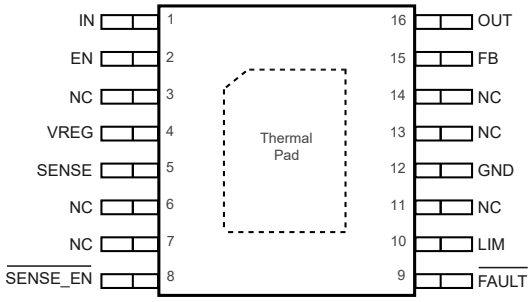

Table 1. Pin Functions: TPL8771Q

Name	Pin No.	I/O	Description
EN	2	I	Regulator output enable pin. Drive EN high to turn on the channel and drive EN low to turn off the channel.
$\overline{\text{FAULT}}$	9	O	Open-drain fault indication pin. Suggest pulling up this pin with an external 10-kΩ resistor.
FB	15	I	Output feedback pin. Connect an external resistor divider from OUT to GND to set the output voltage, or connect FB to GND directly for the current-limited switch operation.
GND	12	-	Ground reference pin. Connect the GND pin to the PCB ground plane directly.
IN	1	I	Input power supply pin. Bypass IN to GND with a 1 μF or greater capacitor.
LIM	10	O	Current limit adjustment pin. Connect a resistor to ground to set the current limitation level of each channel. Or short this pin to ground directly to use the internal current limit.
OUT	16	O	Regulated output voltage pin. Connect a 2.2 μF or greater capacitor to ground to ensure the stability of the regulator.
SENSE	5	O	Output current sense pin. The sense pin current is proportional to the current flow through the internal power MOS. Connect a resistor in parallel with a 1-μF capacitor to ground to set the sense pin output voltage level. Short this pin to ground directly if the current sense is not used.
$\overline{\text{SENSE_EN}}$	8	I	Current sense function enable pin. Drive this pin high to disable the current sense function and drive this pin low to enable the current sense function.
VREG	4	O	Internal voltage regulator output pin. Connect a 1-μF capacitor to ground for the internal regulator stability.
NC	3, 6, 7, 11, 13, 14	-	No connection.

(1) Thermal Pad **MUST** be connected to the PCB ground plane directly.

Specifications

Absolute Maximum Ratings

Parameter		Min	Max	Unit
IN		−40	45	V
EN		−0.3	45	V
OUT		−0.3	45	V
FB, LIM1, $\overline{\text{FAULT}}$, $\overline{\text{SENSE_EN}}$, SENSE_SEL		−0.3	7	V
VREG		−0.3	7	V
SENSE		−0.3	VREG + 0.3	V
T_J	Junction Temperature Range	−40	150	°C
T_{STG}	Storage Temperature Range	−65	150	°C
T_L	Lead Temperature (Soldering 10 sec)		260	°C

(1) Stresses beyond those listed under Absolute Maximum Ratings may cause permanent damage to the device. Exposure to any Absolute Maximum Rating condition for extended periods may affect device reliability and lifetime.
(2) All voltage values are with respect to GND.
(3) Not subject to production test, specified by design.

ESD, Electrostatic Discharge Protection

Symbol	Parameter	Condition	Minimum Level	Unit
HBM	Human Body Model ESD	AEC Q100-002	±2	kV
CDM	Charged Device Model ESD	AEC Q100-011	±1	kV

Recommended Operating Conditions

Parameter		Min	Max	Unit
IN		4.5	42	V
EN		0	42	V
OUT	Regulation mode	1.5	20	V
	Switching mode	1.5	35	V
FB1, LIM, $\overline{\text{FAULT}}$, $\overline{\text{SENSE_EN}}$, SENSE_SEL		0	5.5	V
C_{OUT}	Output Capacitor Requirements	2.2	100	μF
ESR	Output Capacitor ESR Requirements	0.001	5	Ω
T_A	Ambient Temperature Range	−40	125	°C
T_J	Junction Temperature Range	−40	150	°C

Thermal Information

Package Type	θ_{JA}	θ_{JB}	$\theta_{JC,top}$	Unit
ETSSOP16	33	12	30	°C/W

Electrical Characteristics

All test conditions: V_{IN} = 14 V, V_{EN} = 2 V, C_{IN} = C_{OUT} = 10 µF, I_{OUT} = 0.1 mA. T_A = −40°C to +125°C, unless otherwise noted.

Symbol	Parameter	Conditions	Min	Typ	Max	Unit
Supply Input Voltage and Current						
V_{IN}	Input Supply Voltage Range (1)		$V_{IN, MIN}$		42	V
UVLO	V_{IN} Under-Voltage Lockout Threshold	VIN rising, V_{EN} = 2 V, I_{OUT} = 0.1 mA		3.65	4	V
	Hysteresis			500		mV
I_{SD}	Shutdown Current	V_{EN} = 0 V		1.5	5	µA
I_Q	Quiescent Current	I_{OUT} = 0 mA		0.4	1	mA
		I_{OUT} = 1 mA		0.4	1	mA
		I_{OUT} = 300 mA		1.6	4.5	mA
$I_{LKG_IN_REV}$	Leakage Current of Input Voltage Reverse Polarity	–40 V < V_{IN} < 0 V, reverse current to IN		0.04		mA
Enable Control (EN1 and EN2)						
V_{IH_EN}	EN Logic Input High (Enable)		2		42	V
V_{IL_EN}	EN Logic Input Low (Disable)		0		0.7	V
I_{EN}	EN Pin Leakage Current	V_{EN} = 2 V to 42 V	0		4	µA
Current Sense Control ($\overline{SENSE_EN}$, SENSE_SEL)						
V_{IH}	Logic-Input High Level		2		5.5	V
V_{IL}	Logic-Input Low Level		0		0.7	V
$I_{\overline{SENSE_EN}}$	$\overline{SENSE_EN}$ pin leakage current	$V_{\overline{SENSE_EN}}$ = 5 V			10	µA
I_{SENSE_SEL}	SENSE_SEL Pin Leakage Current	V_{SENSE_SEL} = 5 V			10	µA
Output Voltage and Current						
V_{FB}	Feedback Voltage		−2%	1.233	2%	V
I_{FB}	FB Pin Leakage Current	Force V_{FB} = 1.3V	−1		1	µA
V_{OUT}	Output Accuracy (2)	V_{IN} = V_{IN_MIN} to 42 V, I_{OUT} = 10 mA, voltage variation on the FB pin	−2%		2%	
ΔV_{LINE}	Line Regulation on the FB pin (2)	I_{OUT} = 1 mA to 300 mA, voltage variation on the FB pin			10	mV
ΔV_{LOAD}	Load Regulation on the FB pin (2)	V_{IN} = 14 V, I_{OUT} = 1 mA to 300 mA, voltage variation on the FB pin			20	mV
V_{DO}	Dropout Voltage (3)	Force V_{FB} = 1.2 V, I_{OUT} = 100 mA		300	500	mV
		Force V_{FB} = 1.2 V, I_{OUT} = 300 mA		900	1500	mV

Symbol	Parameter	Conditions	Min	Typ	Max	Unit
I_{OUT}	Output Current Range	V_{OUT} in regulation	0		300	mA
R_{DIS}	Output Active Discharge Resistor	EN = GND		50		kΩ
V_{REG}	Internal Regulator Output Voltage	V_{IN} = V_{IN_MIN} to 42 V, I_{REG} = 0 mA	4	4.25	4.5	V
I_{REG_LIM}	Internal Regulator Output Current Limit		15		75	mA
Current Sense and Fault Detection						
I_{CL}	Internal Current Limit	Short LIM to GND	340		550	mA
K_{CL}	OUT to LIM Current Ratio (I_{OUT}/I_{LIM})	V_{IN} = V_{IN_MIN} to 42 V, I_{OUT} = 50 mA to 300 mA		198		
I_{LIM}	Adjustable Current-Limit Accuracy	V_{IN} = V_{IN_MIN} to 42 V, I_{OUT} = 50 mA to 300 mA	−8%		8%	
K_{SENSE}	OUT to SENSE Current Ratio (I_{OUT}/I_{SENSE})	V_{IN} = V_{IN_MIN} to 42 V, I_{OUT} = 5 mA to 300 mA		198		
I_{SENSE}	Current Sense Accuracy	I_{OUT} = 100 mA to 300 mA	−3%		3%	
		I_{OUT} = 50 mA to 100 mA	−5%		5%	
		I_{OUT} = 10 mA to 50 mA	−10%		10%	
		I_{OUT} = 5 mA to 10 mA	−20%		20%	
I_{LKG}	Leakage Current of SENSE and LIM	EN = GND			2	μA
V_{SENSE_STB}	SENSE Pin Voltage of Short-to-Battery Fault	When short-to-battery fault or reverse-current fault occurs	3.05	3.1	3.3	V
V_{SENSE_OT}	SENSE Pin Voltage of Over-Temperature Fault	When over-temperature fault occurs	2.7	2.75	3	V
V_{SENSE_OC}	SENSE Pin Voltage of Over-Current Fault	When over-current fault occurs	2.4	2.5	2.65	V
I_{SENSE_H}	SENSE Pin Current of Fault Conditions	When short-to-battery fault, reverse-current fault, over-temperature fault or over-current fault occurs	3.3			mA
V_{TH_STB}	Short-to-Battery Threshold	V_{OUT} − V_{IN}, checked during startup	−500	−300	110	mV
I_{REV}	Reverse-Current Threshold	Power MOS is on	−100	−40	−1	mA
V_{TH_ILIM}	Current Limit Threshold	When the output current is limited		1.233		V
$V_{OL_\overline{FAULT}}$	Output Low Level of $\overline{FAULT}$	Sink 5 mA to the $\overline{FAULT}$ pin			0.4	V
$I_{LKG_\overline{FAULT}}$	Leakage Current of $\overline{FAULT}$	Force 5 V at the $\overline{FAULT}$ pin			1	μA
$t_{d_SENSE_SEL_R}$	Current Sense Delay Time from the Rising Edge of SENSE_SEL (4)	$\overline{SENSE_EN}$ = GND, SENSE_SEL rising from 0 to 5 V in 1 μs		10		μs

Symbol	Parameter	Conditions	Min	Typ	Max	Unit
$t_{d_SENSE_SEL_F}$	Current Sense Delay Time from the Falling Edge of SENSE_SEL (4)	$\overline{SENSE_EN}$= GND, SENSE_SEL falling from 0 to 5 V in 1 μs		10		μs
$t_{d_\overline{SENSE_EN}_R}$	Current Sense Delay Time from the Rising Edge of $\overline{SENSE_EN}$ (4)	$\overline{SENSE_EN}$ rising from 0 to 5 V in 1us		10		μs
$t_{d_\overline{SENSE_EN}_F}$	Current Sense Delay Time from the Falling Edge of $\overline{SENSE_EN}$ (4)	$\overline{SENSE_EN}$ falling from 0 to 5 V in 1us		10		μs
t_{d_RC}	Reverse-Current Fault or Short-to-Battery Fault Shutdown Deglitch Time (4)	The delay time from reverse current is detected to the power FET is switched off. I_{OUT} = −200 mA, T_A = 25°C		5	20	μs
t_{BLK_RC}	Reverse-Current Fault Detection Blanking Time (4)	Reverse-current fault detection after power up, the rising edge of EN1/2, current limitation event is over, or recovery from over temperature condition		16		ms
PSRR and Output Noise						
PSRR	Power Supply Rejection Ratio (4)	I_{OUT} = 10 mA, f = 100 Hz		90		dB
		I_{OUT} = 10 mA, f = 1 kHz		80		dB
		I_{OUT} = 10 mA, f = 100 kHz		80		dB
		I_{OUT} = 10 mA, f = 1 MHz		33		dB
V_N	Output RMS noise (4)	I_{OUT} = 10 mA, 10 Hz to 100 kHz		350		μV_{RMS}
Temperature Range						
T_{SD}	Thermal Shutdown Threshold (4)			175		°C
	Thermal Shutdown Hysteresis (4)			15		°C

(1) V_{IN_MIN} = 4.5 V or V_{OUT_NOM} + 1.5 V, whichever is greater.
(2) Tolerance of the external resistor divider is not included.
(3) Dropout voltage is the minimum input-to-output voltage differential needed to maintain regulation at a specified output current. Dropout voltage is measured when forcing the FB voltage to 1.2 V. In dropout, the output voltage equals to (V_{IN} – V_{DO}).
(4) Not tested during production, guaranteed by design.

Typical Performance Characteristics

All test conditions: V_{IN} = 14 V, V_{EN} = 2 V, V_{OUT} = 5 V; C_{IN} = C_{OUT} = 10 µF, I_{OUT} = 0.1 mA. T_A = 25°C, unless otherwise noted.

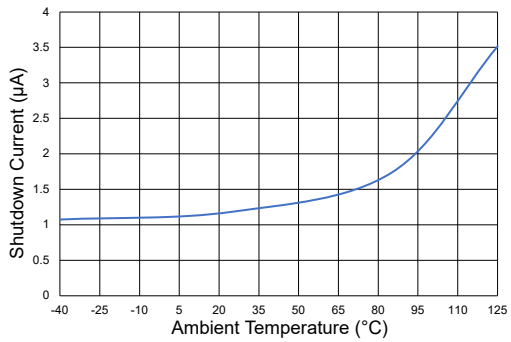

Figure 1. Shutdown Current vs. Ambient Temperature

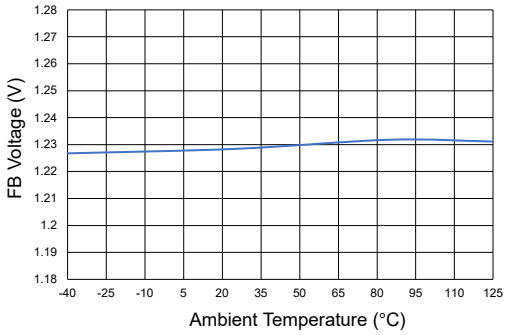

Figure 2. FB Voltage vs. Ambient Temperature

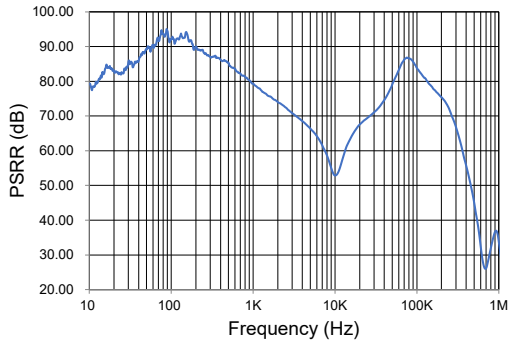

Load current = 10 mA

Figure 3. PSRR

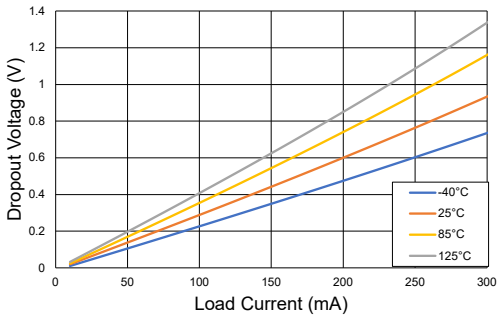

V_{OUT} = 5 V

Figure 4. Dropout Voltage vs. Load Current

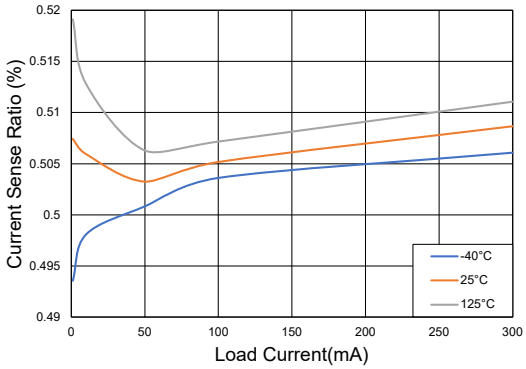

Figure 5. Current-Sense Ratio vs. Load Current

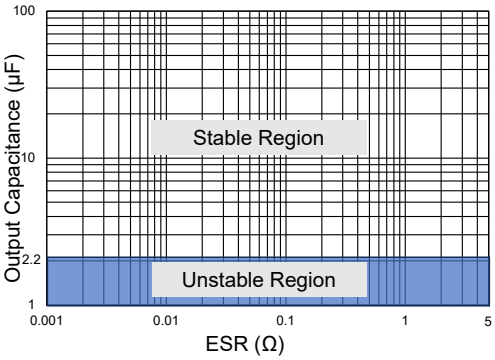

Figure 6. Output Capacitance Stability Range

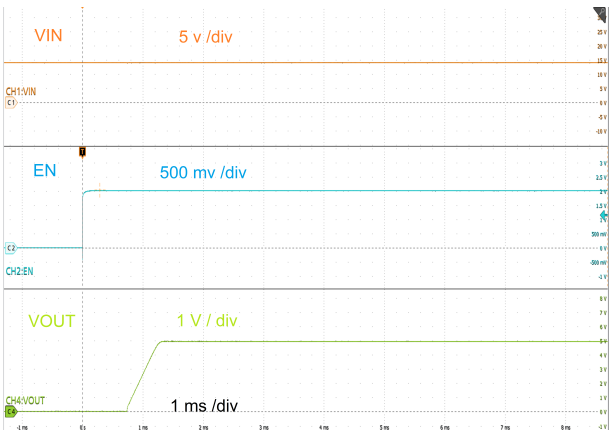

Figure 7. Startup Waveform

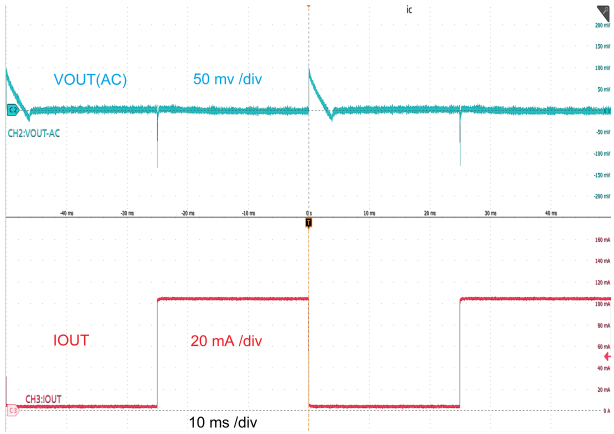

Figure 8. 0-mA to 100-mA Load Transient

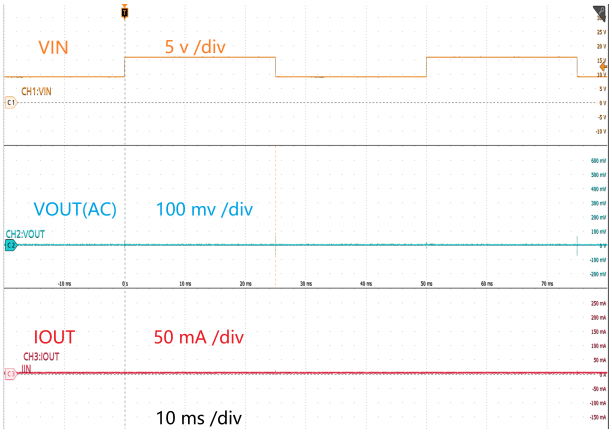

Figure 9. 9-V to 16-V Line Transient

Detailed Description

Overview

The TPL8771Q is a wide-input-voltage low-dropout linear regulator integrated with output current sense and diagnosis function. This device supports operating voltage range from 4 V to 42 V, with a maximum transient voltage of 45 V.

The TPL8771Q has one adjustable output. Connect an external resistor divider, and the output voltage can be set from 1.5 V to 20 V for each channel separately. The output current is 300 mA, which is suitable for the phantom power or low-noise active antenna power in automotive.

The TPL8771Q offers a SENSE pin for current sensing. During normal operation, the output current can be obtained by measuring the voltage at the SENSE pin, for which the sense pin current is proportional to the current flow through the internal power MOS. Besides, by monitoring the sense pin voltage, it is easy to distinguish different faults, such as open load, overload, output short-circuit to ground, over temperature, reverse current or output short-circuit to battery, and reverse input polarity.

Functional Block Diagram

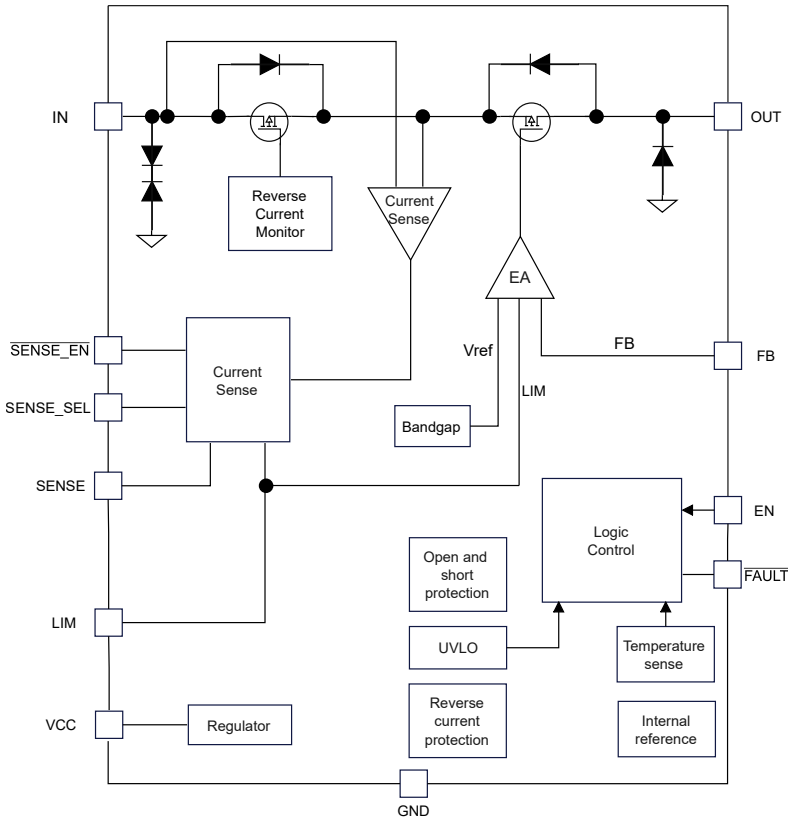

Figure 10. Functional Block Diagram

Feature Description

Enable (EN)

The enable pin is active high. Connect this pin to the GPIO of an external processor or digital logic control circuit to enable and disable the device. Or connect this pin to the IN pin for self-bias applications.

Under-Voltage Lockout (UVLO)

The TPL8771Q uses an under-voltage lockout circuit to keep the output shut off until the internal circuitry operates properly. Refer to the Electrical Characteristics table for UVLO threshold and hysteresis.

Regulated Output Voltage (OUT)

The output voltage of the TPL8771Q can be set from 1.5 V to 20 V for each channel separately. When the input voltage is higher than V_{OUT_NOM} + V_{DO}, the output pin is the regulated output based on the selected voltage version. When the input voltage falls below V_{OUT_NOM} + V_{DO}, the output pin tracks the input voltage minus the dropout voltage based on the load current.

Adjustable Output Voltage

Use an external resistor divider to select an output voltage between 1.5 V and 20 V. Use the following formula to calculate the output voltage. The recommended value for both R1 and R2 is less than 100 kΩ.

$$V_{OUT} = V_{FB} \times \frac{R_1 + R_2}{R_2} \quad (1)$$

Fault Detection

Before the device goes into current-limit mode, the output current-sense voltage is linearly proportional to the actual load current.

- During the short-circuit condition, the output current-sense voltage is between 2.4 V and 2.65 V (2.5 V typical).
- During the thermal-shutdown condition, the output current-sense voltage is between 2.7 V and 3 V (2.75 V typical).
- During the reverse-current and short-to-battery condition, the output current-sense voltage is between 3.05 V and 3.3 V (3.1 V typical).

Failure Mode	V_{SENSE}	$\overline{FAULT}$	LDO Switch Output	Latched
Open load	$I_{OUT} \times R_{SENSE}/198$	High	Enabled	No
Normal		High	Enabled	No
Overcurrent		High	Enabled	No
Short-circuit or current limit	2.4 to 2.65 V	Low	Enabled	No
Thermal shutdown	2.7 to 3 V	Low	Disabled	No
Output short-to-battery	3.05 to 3.3 V	Low	Disabled	Yes
Reverse current	3.05 to 3.3 V	Low	Disabled	Yes

Over-Current Protection

The TPL8771Q series integrates an internal current limit that helps to protect the regulator during fault conditions, e.g., the output is shorted to ground, or the output is forced below V_{OUT_NOM}. The output voltage is not regulated when the device is in current limit, and $V_{OUT} = I_{CL} \times R_{LOAD}$.

Short-to-Battery and Reverse Current Detection

To detect an Out-Short-to-Battery fault, each channel compares the voltage levels between the OUT and IN pins prior to activating the switch. The short-to-battery detection occurs every time the LDO switch is enabled, either on the rising edge of the EN pin or during the recovery phase from thermal shutdown. If the device identifies the short-to-battery fault during this process, it immediately latches off the LDO switch, assert the ERR pin to a low state, and internally pull up the SENSE voltage of the faulty channel to a voltage rail ranging from 3.05 V to 3.3 V. Once the short-to-battery condition is resolved and the EN pin is toggled, the device resumes normal operation.

If a short-to-battery fault leads to a reverse current flow lasting for more than 5 μs, the LDO switch is latched off automatically, and the ERR pin is asserted to a low state to indicate the fault. To clear this latched condition after a short-to-battery (reverse current) fault, the cause of the fault must first be removed, and subsequently, the EN pin must be toggled to enable normal operation of the device.

Over-Temperature Protection

The over-temperature protection starts to work when the junction temperature exceeds the thermal shutdown (T_{SD}) threshold, which turns off the regulator immediately. When the device cools down and the junction temperature falls below the thermal shutdown threshold minus thermal shutdown hysteresis, the regulator turns on again.

The junction temperature range should be limited according to the Recommended Operating Conditions table, continuously operating above the junction temperature range reduces the device lifetime.

Integrated Reverse-Polarity Protection

The device integrates a reverse-connected PMOS to block the reverse current during reverse polarity at the input and output short-to-battery conditions. A special ESD structure at the input is specified to withstand −40 V.

Integrated Inductive Clamp

During output turnoff, the cable inductance continues to source the current from the output of the device. To facilitate the dissipation of inductive energy accumulated in the cable, the device incorporates an inductive clamp. Additionally, an internal diode is interconnected between the OUT and GND pins, boasting a DC-current capability of 300 mA for the purpose of inductive clamp protection.

Application and Implementation

> Note
>
> Information in the following application sections is not part of the 3PEAK's component specification and 3PEAK does not warrant its accuracy or completeness. 3PEAK's customers are responsible for determining suitability of components for their purposes. Customers should validate and test their design implementation to confirm system functionality.

Application Information

The TPL8771Q is a wide-input-voltage low-dropout linear regulator integrated with output current sense and diagnosis function. The following application schematic shows a typical usage of the TPL8771Q.

Typical Application

Figure 11 shows the typical application schematic of the TPL8771Q series.

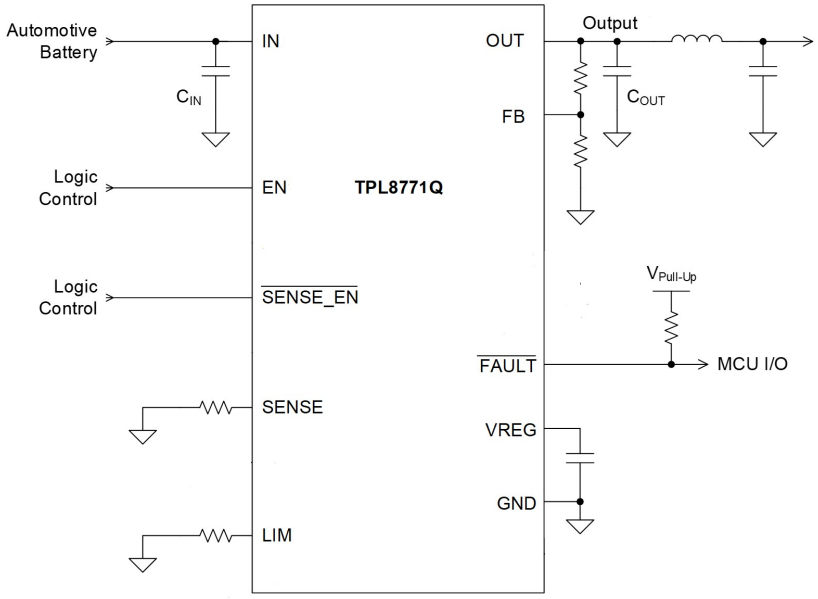

Figure 11. Typical Application Circuit

Current Sense Resistor Selection

The current-sense output is designed to provide a current that is proportional to the output current flowing through the OUT pin of the device. Specifically, the sense current is related to the output current by a factor of 1/198.

The current-sense resistor recommendation is shown in the following table.

Maximum Output Current	Recommended Current Sense Resistor
300 mA	1 kΩ
200 mA	1.5 kΩ
100 mA	3 kΩ

Current-Limit Resistor Selection

The device allows for programmable current limiting through the use of external resistors connected to the LIM pin. The current flowing through the LIM pin is designed to be proportional to the load current at the OUT pin. Internally, the LIM pin is connected to a current-limit comparator that references a voltage of 1.233 V.

The programmable current limit accuracy is 8% maximum across all conditions. The following Equation shows how to calculate the maximum current limit value. And this result does not include resistor tolerance in the calculation.

$$R_{LIM} = \frac{1.08 \times 198 \times 1.233\ V}{I_{LIM(MAX)}} \quad (2)$$

If an internal fixed current limit of the device is needed, short the LIM pin to ground.

Input Capacitor and Output Capacitor

3PEAK recommends adding a 10 μF or greater capacitor with a 0.1 μF bypass capacitor in parallel at the IN pin to keep the input voltage stable. The voltage rating of the capacitors must be greater than the maximum input voltage.

To ensure loop stability, the TPL8771Q series requires an output capacitor of 2.2 μF to 100 μF with an ESR range from 0.001 Ω to 5 Ω. 3PEAK recommends selecting an X7R type 10-μF ceramic capacitor with low ESR over temperature.

Both input capacitors and output capacitors must be placed as close to the device pins as possible.

Power Dissipation and Thermal Considerations

During normal operation, the LDO junction temperature should meet the requirement in the Recommended Operating Conditions table. Use the equations below to calculate the power dissipation and estimate the junction temperature.

The power dissipation can be calculated using Equation 3.

$$P_D = (V_{IN} - V_{OUT}) \times I_{OUT} + V_{IN} \times I_{GND} \quad (3)$$

The junction temperature can be estimated using Equation 4. θ_{JA} is the junction-to-ambient thermal resistance.

$$T_J = T_A + P_D \times \theta_{JA} \quad (4)$$

Layout

Layout Guideline

- Both input capacitors and output capacitors must be placed to the device pins as close as possible, and the vias between capacitors and device power pins must be avoided.
- It is recommended to bypass the input pin to ground with a 0.1-μF bypass capacitor. The loop area formed by the bypass capacitor connection, the IN pin, and the GND pin of the system must be as small as possible.
- It is recommended to use wide and thick copper to minimize I×R drop and heat dissipation.

Layout Example

The following figure shows a layout example of the TPL8771Q-TSBR-S.

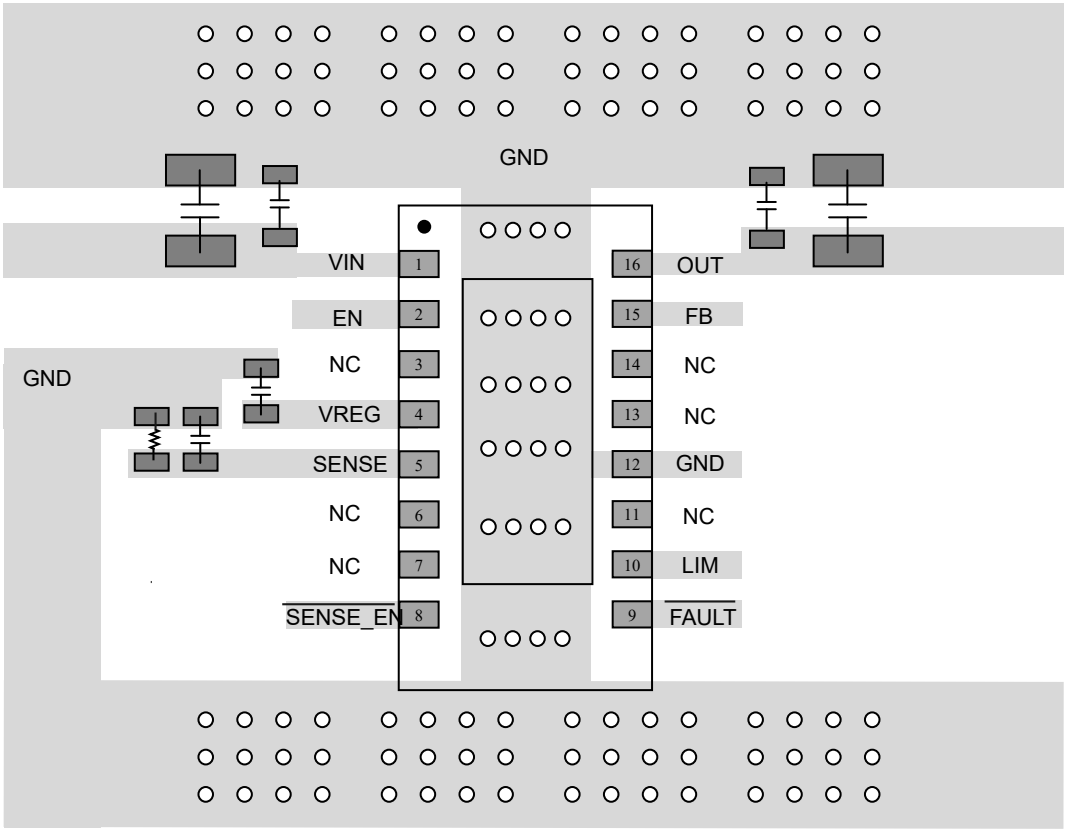

Figure 12. TPL8771Q-TSBR-S Layout Example

Tape and Reel Information

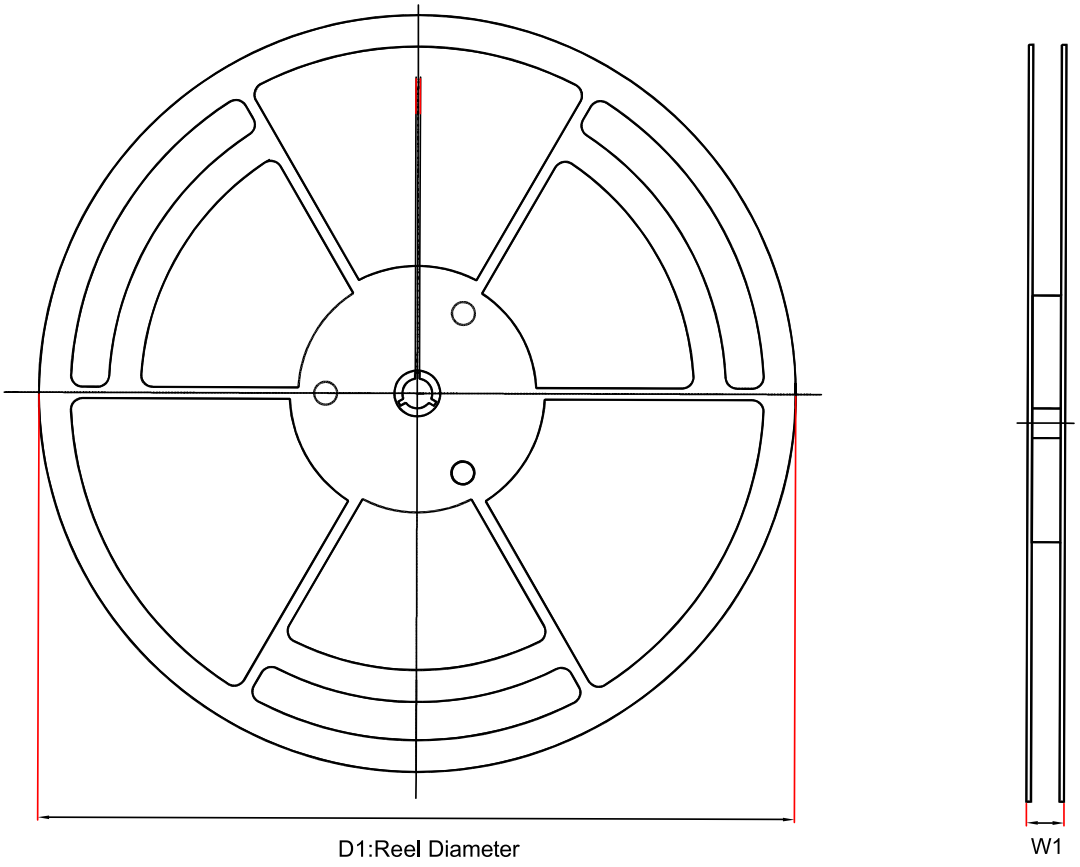

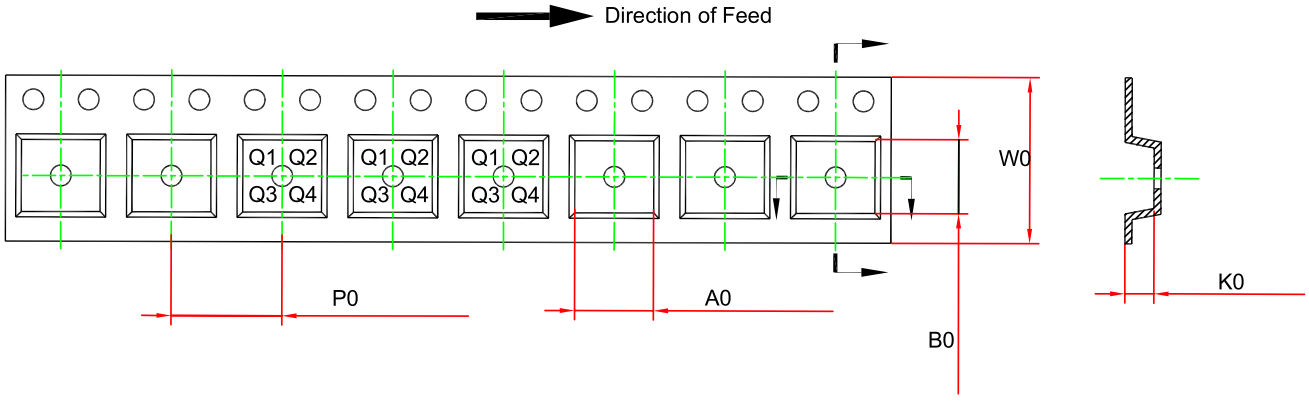

Order Number	Package	D1 (mm)	W1 (mm)	A0 (mm)	B0 (mm)	K0 (mm)	P0 (mm)	W0 (mm)	Pin1 Quadrant
TPL8771Q-TSBR-S	ETSSOP16	330	17.6	6.8	5.4	1.5	8	12	Q1

Package Outline Dimensions

ETSSOP16

Package Outline Dimensions TSB(ETSSOP-16-D)

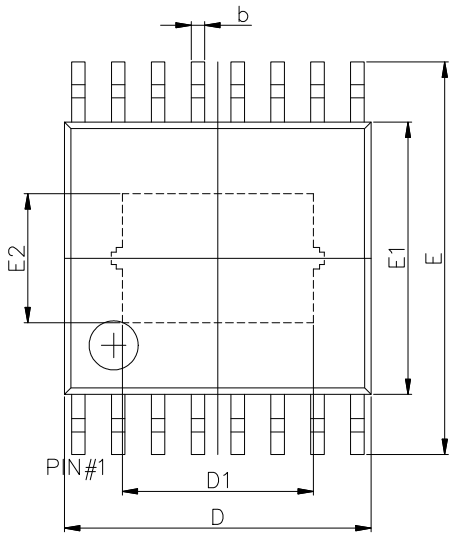

Top View

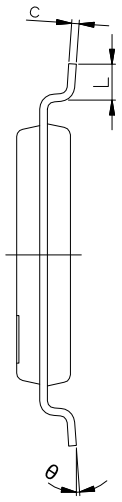

Side View

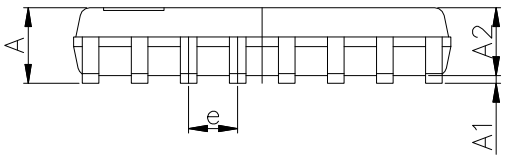

Side View

Symbol	Dimensions In Millimeters		Dimensions In Inches	
	MIN	MAX	MIN	MAX
A	---	1.100	---	0.043
A1	0.050	0.150	0.002	0.006
A2	0.850	0.950	0.033	0.037
b	0.190	0.300	0.007	0.012
c	0.090	0.200	0.004	0.008
D	4.900	5.100	0.193	0.201
D1	3.015	3.215	0.119	0.127
E	6.200	6.600	0.244	0.260
E1	4.300	4.500	0.169	0.177
E2	2.005	2.205	0.079	0.087
e	0.650 BSC		0.026 BSC	
L	0.500	0.700	0.020	0.028
θ	1°	7°	1°	7°

NOTES

1. Do not include mold flash or protrusion.
2. This drawing is subject to change without notice.
3. Reference JEDEC MO-153.
4. The thermal pad is on Bottom side of the product.

Order Information

Order Number	Operating Temperature Range	Package	Marking Information	MSL	Transport Media, Quantity	Eco Plan
TPL8771Q-TSBR-S	−40 to 125°C	ETSSOP16	L8771	MSL3	3,000	Green

Green: 3PEAK defines "Green" to mean RoHS compatible and free of halogen substances.

IMPORTANT NOTICE AND DISCLAIMER

Copyright© 3PEAK 2012-2026. All rights reserved.

Trademarks. Any of the 思瑞浦 or 3PEAK trade names, trademarks, graphic marks, and domain names contained in this document /material are the property of 3PEAK. You may NOT reproduce, modify, publish, transmit or distribute any Trademark without the prior written consent of 3PEAK.

Performance Information. Performance tests or performance range contained in this document/material are either results of design simulation or actual tests conducted under designated testing environment. Any variation in testing environment or simulation environment, including but not limited to testing method, testing process or testing temperature, may affect actual performance of the product.

Disclaimer. 3PEAK provides technical and reliability data (including data sheets), design resources (including reference designs), application or other design recommendations, networking tools, security information and other resources "As Is". 3PEAK makes no warranty as to the absence of defects, and makes no warranties of any kind, express or implied, including without limitation, implied warranties as to merchantability, fitness for a particular purpose or non-infringement of any third-party's intellectual property rights. Unless otherwise specified in writing, products supplied by 3PEAK are not designed to be used in any life-threatening scenarios, including critical medical applications, automotive safety-critical systems, aviation, aerospace, or any situations where failure could result in bodily harm, loss of life, or significant property damage. 3PEAK disclaims all liability for any such unauthorized use.

This page intentionally left blank

ENTEGRECİ

Bu belge www.entegreci.com üzerinden sunulmaktadır.

Elektronik komponent tedarikinde Entegreci

Entegreci, Eskişehir merkezli, Türkiye geneline satış yapan bir elektronik komponent mağazasıdır. Entegreler (IC), mikrodenetleyiciler, transistörler, diyotlar, pasif elemanlar, konnektörler, modüller ve geliştirme kartları tek adetten seri üretim adetlerine kadar satılır. Ürün sayfalarında güncel stok durumunu, fiyatı ve datasheet bağlantısını bulabilirsiniz.

Parça koduyla arama

Üretici parça numarasını yazın; stok ve fiyatı hemen görün.

www.entegreci.com

Ürün kategorileri

Entegreden kapasitöre tüm elektronik komponent kategorileri.

Kategorilere göz atın

Üreticiler

Aradığınız üreticinin ürünlerini tek sayfada inceleyin.

Üreticileri görün

Toplu alım ve teklif

Listede olmayan ya da yüksek adetli parçalar için teklif isteyin.

Teklif isteyin

www.entegreci.com | **destek@entegreci.com** | **0850 305 90 34**

Entegreci is an online electronic components store based in Türkiye. Search by manufacturer part number to see stock, prices and datasheets for integrated circuits, microcontrollers, transistors, passive components and connectors, or request a quote for parts that are not listed.

Bu sayfa Entegreci tarafından eklenmiştir. Belgenin önceki sayfaları asıl yayıncısına aittir ve içeriği değiştirilmemiştir; en güncel sürüm için belgenin yayıncısına başvurun.