800-mA, Low-Dropout Linear Regulator

Features

- Input Voltage: 2.7 V to 16 V
- Output Voltage:
  - Fixed 5 V and 3.3 V
- ±1% Output Accuracy at Room Temperature, ±2% Output Accuracy Over Line Regulation, Load Regulation, and Operating Temperature Range
- 800-mA Maximum Output Current
- Low Dropout Voltage: 800 mV typical at 800 mA Load Current
- Stable with 2.2-µF to 1000-µF Output Capacitor with ESR Range from 0.001 Ω to 5 Ω
- Junction Temperature Range: –40°C to +125°C
- Package Options:
  - SOT223-3

Applications

- AC Drive Power Stage Modules
- Merchant Network and Server PSU
- Industrial AC/DC
- Ultrasound Scanners
- Servo Drive Control Modules

Description

The TPL51117x series is a low dropout voltage regulator with a typical dropout voltage of 800mV at 800 mA load current.

The TPL51117x series is available in two fixed voltages, 3.3 V and 5 V. The TPL51117x series offers current limiting and thermal shutdown.

The TPL51117x series supports a wide range of output capacitors from 2.2 µF to 1000 µF with an ESR range from 0.001 Ω to 5 Ω. Also, the TPL51117x series integrates over-current protection and over-temperature protection.

The TPL51117x series provides the SOT223-3 package with a guaranteed operating junction temperature range (T_J) from –40°C to +125°C.

Typical Application Circuit

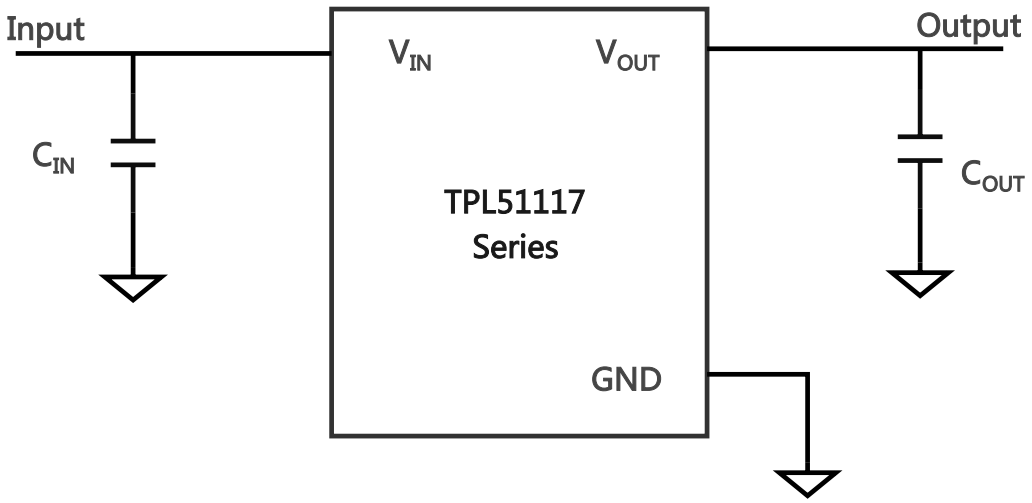

Table of Contents

Features 1
Applications 1
Description 1
Typical Application Circuit 1
Product Family Table 3
Revision History 3
Pin Configuration and Functions 4
Specifications 5
Absolute Maximum Ratings 5
ESD, Electrostatic Discharge Protection 5
Recommended Operating Conditions 5
Thermal Information 5
Electrical Characteristics 6
Typical Performance Characteristics 7
Detailed Description 8
Overview 8
Functional Block Diagram 8
Feature Description 8
Application and Implementation 10
Application Information 10
Typical Application 10
Layout 11
Layout Guideline 11
Layout Example 11
Tape and Reel Information 12
Package Outline Dimensions 13
SOT223-3 13
Order Information 14
IMPORTANT NOTICE AND DISCLAIMER 15

Product Family Table

Order Number	Output Voltage (V)	Package
TPL5111733-ST4R	3.3 V	SOT223-3
TPL5111750-ST4R	5.0 V	SOT223-3

Revision History

Date	Revision	Notes
2025-11-13	Rev.A.0	Initial release
2025-12-29	Rev.A.1	The following updates are all about the new datasheet formats or typos, and the actual product remains unchanged • Corrected the maximum value of the Dropout Voltage

Pin Configuration and Functions

SOT223-3 Package
Top View

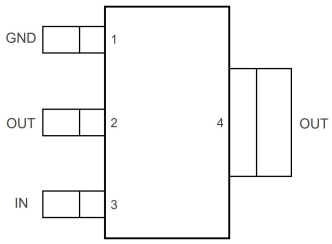

Table 1. Pin Functions: TPL51117x

Pin Number	Pin Name	I/O	Description
1	GND	-	Ground reference pin
3	IN	I	Input voltage pin.
2,4	OUT	O	Regulated output voltage pin.

Specifications

Absolute Maximum Ratings

Parameter		Min	Max	Unit
IN		−0.3	20	V
OUT		−0.3	16	V
T_J	Junction Temperature Range	−40	150	°C
T_{STG}	Storage Temperature Range	−65	150	°C
T_L	Lead Temperature (Soldering 10 sec)		260	°C

(1) Stresses beyond those listed under Absolute Maximum Ratings may cause permanent damage to the device. Exposure to any Absolute Maximum Rating condition for extended periods may affect device reliability and lifetime.
(2) All voltage values are with respect to GND.

ESD, Electrostatic Discharge Protection

Symbol	Parameter	Condition	Minimum Level	Unit
HBM	Human Body Model ESD	ANSI/ESDA/JEDEC JS-001 (1)	±3	kV
CDM	Charged Device Model ESD	ANSI/ESDA/JEDEC JS-002 (2)	±1.5	kV

(1) JEDEC document JEP155 states that 500-V HBM allows safe manufacturing with a standard ESD control process.
(2) JEDEC document JEP157 states that 250-V CDM allows safe manufacturing with a standard ESD control process.

Recommended Operating Conditions

Parameter		Min	Max	Unit
IN		2.7	16	V
OUT		0	5	V
C_{OUT} (1)(2)	Output Capacitor Requirements	2.2	1000	μF
ESR (2)	Output Capacitor ESR Requirements	0.001	5	Ω
T_J	Junction Temperature Range	−40	125	°C

(1) The minimum output capacitance requirement is applicable for a worst-case capacitance tolerance of 30%.
(2) Not subject to production test, specified by design.

Thermal Information

Package Type	θ_{JA}	θ_{JB}	θ_{JC}	Unit
SOT223-3	59.1	10.6	46.6	°C/W

Electrical Characteristics

All test conditions: V_{IN} = $V_{OUT\ (NOM)}$ + 2 V, C_{IN} = C_{OUT} = 10 µF, I_{OUT} = 10 mA. T_J = –40°C to 125°C, unless otherwise noted.

Symbol	Parameter	Conditions	Min	Typ	Max	Unit
Supply Input Voltage and Current						
V_{IN}	Input Supply Voltage Range		2.7		16	V
I_Q	Quiescent Current	I_{OUT} = 0 mA		1	5	mA
Regulated Output Voltage and Current						
V_{OUT}	Output Accuracy	T_J = 25°C	−1%		1%	
		–40°C ≤ T_J ≤ +125°C	−2%		2%	
ΔV_{OUT}	Line Regulation	V_{IN} = $V_{OUT\ (NOM)}$ + 1.4 V to 10 V		1	10	mV
	Load Regulation	I_{OUT} = 0 mA to 800 mA		1	15	mV
V_{DO}	Dropout Voltage (1)	I_{OUT} = 800 mA		800	1000	mV
I_{OUT}	Output Current Range	V_{OUT} in regulation	0		800	mA
I_{CL}	Output Current Limit	V_{OUT} is forced to 0.9*$V_{OUT\ (NOM)}$	800	1000	1600	mA
I_{SC}	Short-circuit Current Limit	V_{OUT} = 0, T_J = 25°C		1000		mA
PSRR	Power Supply Rejection Ratio (2)	I_{OUT} = 10 mA, f = 120 Hz		60		dB
		I_{OUT} = 10 mA, f = 1 kHz		50		dB
		I_{OUT} = 10 mA, f = 10 kHz		50		dB
Temperature Range						
T_{SD}	Thermal Shutdown Threshold (2)			165		°C
	Thermal Shutdown Hysteresis (2)			15		°C

(1) Dropout voltage is the minimum input-to-output voltage differential needed to maintain regulation at a specified output current. Dropout voltage is measured when the output voltage has dropped 100 mV from the nominal value. In dropout, the output voltage will be equal to (V_{IN} – V_{DO}).

(2) Not tested during production.

Typical Performance Characteristics

All test conditions: V_{IN} = $V_{OUT\ (NOM)}$ + 1 V, C_{IN} = C_{OUT} = 10 µF, I_{OUT} = 10 mA. T_A = 25°C, unless otherwise noted.

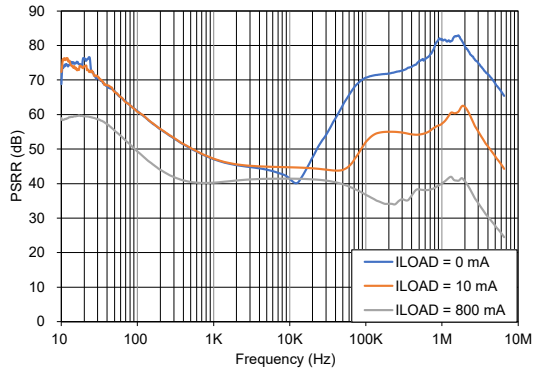

V_{OUT} = 5 V

Figure 1. PSRR

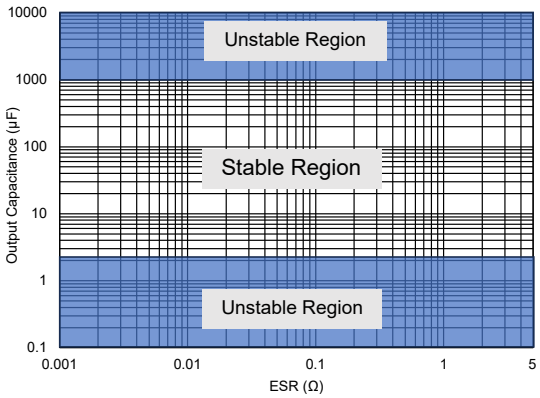

Figure 2. Output Capacitance vs. ESR Stability

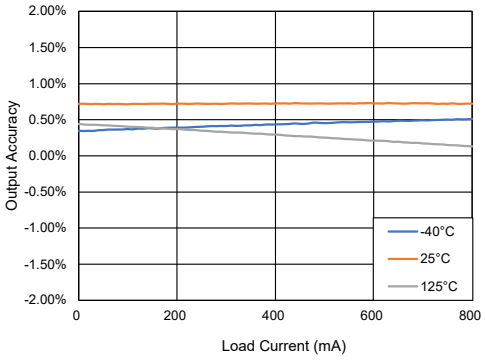

V_{OUT} = 5 V

Figure 3. Load Regulation

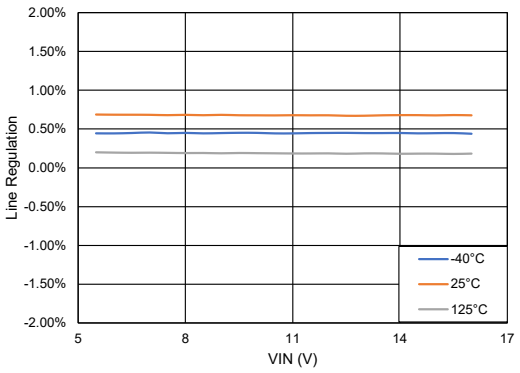

V_{OUT} = 5 V

Figure 4. Line Regulation

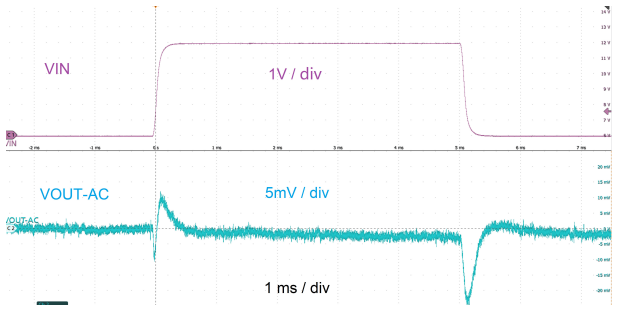

V_{OUT} = 5 V, V_{IN} = 6 V to 12 V

Figure 5. Line Transient

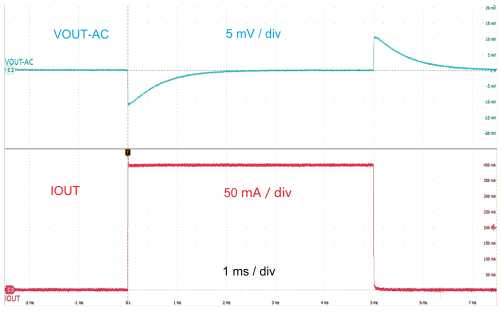

V_{OUT} = 5 V, I_{OUT} = 1 mA to 800 mA

Figure 6. Load Transient

Detailed Description

Overview

The TPL51117x series is a low dropout voltage regulator with a typical dropout voltage of 800 mV at 800 mA load current.

The TPL51117x series is available in two fixed voltages, 3.3 V and 5 V. The TPL51117x series offers current limiting and thermal shutdown features.

The TPL51117x series supports a wide range of output capacitors from 2.2 µF to 1000 µF with an ESR range from 0.001 Ω to 5 Ω. Also, the TPL51117x series integrates over-current protection and over-temperature protection.

The TPL51117x series provides the SOT223-3 package with a guaranteed operating junction temperature range (T_J) from –40°C to +125°C.

Functional Block Diagram

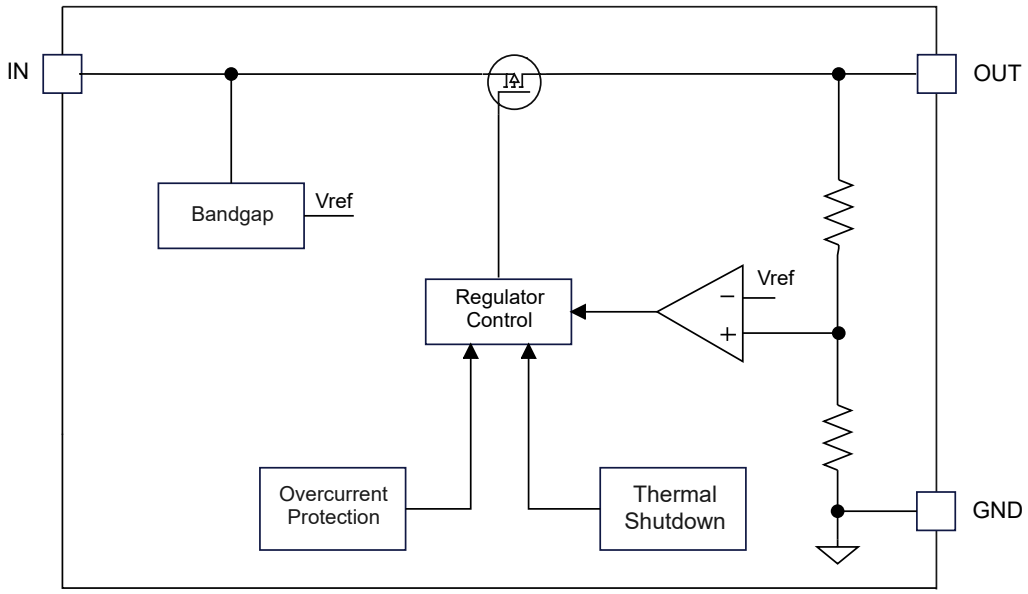

Figure 7. Functional Block Diagram

Feature Description

Operating Voltage Range (V_{IN})

The TPL51117x series does not include any dedicated UVLO circuitry. The output voltage of the TPL51117x series is not well regulated until VIN exceeds (V_{OUT} + V_{DO}).

Regulated Output Voltage (OUT)

The TPL51117x series is available in fixed voltage versions of 3.3 V and 5 V. When the input voltage is higher than $V_{OUT\ (NOM)}$ + V_{DO}, the output pin is the regulated output based on the selected voltage version. When the input voltage falls below $V_{OUT\ (NOM)}$ + V_{DO}, the output pin tracks the input voltage minus the dropout voltage.

Over-Current Protection

The TPL51117x series integrates an internal current limit that helps to protect the regulator during fault conditions. The output voltage is not regulated when the device is in current limit and $V_{OUT} = I_{CL} \times R_{LOAD}$.

Over-Temperature Protection

The over-temperature protection starts to work when the junction temperature exceeds the thermal shutdown (T_{SD}) threshold, which turns off the regulator immediately. When the device cools down and the junction temperature falls below the thermal shutdown threshold minus thermal shutdown hysteresis, the regulator turns on again. The junction temperature range should be limited according to the Recommended Operating Conditions table, continuously operating above the junction temperature range will reduce the device lifetime.

Application and Implementation

> Note
>
> Information in the following application sections is not part of the 3PEAK's component specification and 3PEAK does not warrant its accuracy or completeness. 3PEAK's customers are responsible for determining suitability of components for their purposes. Customers should validate and test their design implementation to confirm system functionality.

Application Information

The TPL51117x is a series of 800-mA, low-dropout linear regulators. The following application schematic shows the typical usage of the TPL51117x series.

Typical Application

Figure 8 shows the typical application schematic of the TPL51117x series.

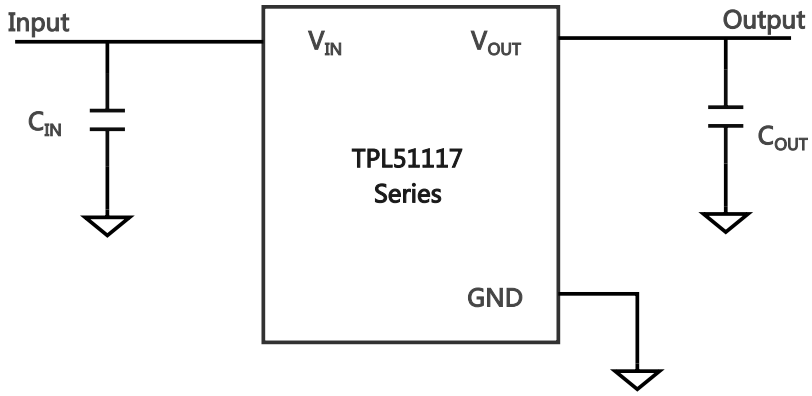

Figure 8. Typical Application Circuit

Input Capacitor and Output Capacitor

3PEAK recommends adding a 10-µF or greater capacitor with a 0.1-µF bypass capacitor in parallel at the IN pin to keep the input voltage stable. The voltage rating of the capacitors must be greater than the maximum input voltage.

To ensure loop stability, the TPL51117x series supports a wide range of output capacitors from 2.2 µF to 1000 µF with an ESR range from 0.001 Ω to 5 Ω. 3PEAK recommends selecting a 10-µF output capacitor.

Both input and output capacitors must be placed as close to the device pins as possible.

Power Dissipation and Thermal Consideration

During normal operation, the LDO junction temperature should not exceed 125°C. Use the equations below to calculate the power dissipation and estimate the junction temperature.

The power dissipation can be calculated using Equation 1.

$$P_D = (V_{IN} - V_{OUT}) \times I_{OUT} + V_{IN} \times I_{GND} \quad (1)$$

The junction temperature can be estimated using Equation 2. θ_{JA} is the junction-to-ambient thermal resistance.

$$T_J = T_A + P_D \times \theta_{JA} \quad (2)$$

Layout

Layout Guideline

- Both input and output capacitors must be placed to the device pins as close as possible, and the vias between capacitors and device power pins must be avoided.
- It is recommended to bypass the input pin to ground with a 0.1-μF bypass capacitor. The loop area formed by the bypass capacitor connection, the IN pin, and the GND pin of the system must be as small as possible.
- It is recommended to use wide and thick copper to minimize I×R drop and heat dissipation.

Layout Example

The following figure shows a layout example of TPL51117x.

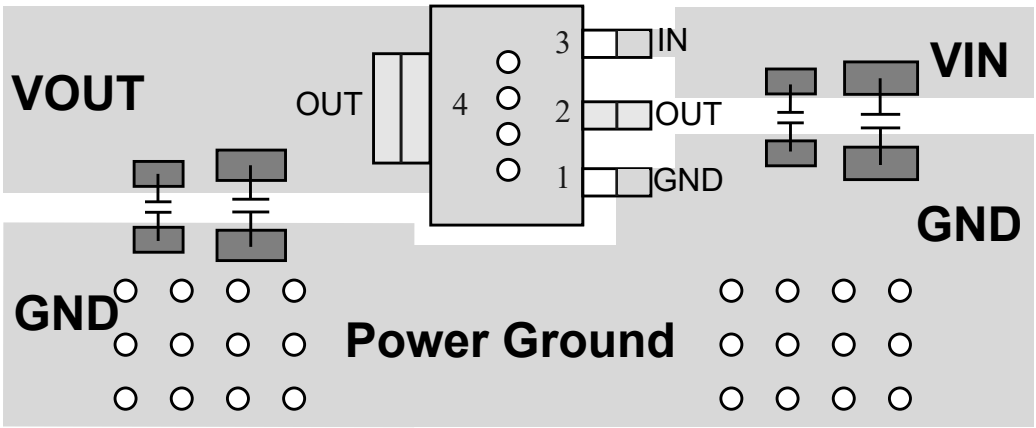

Figure 9. TPL51117x Layout Example

Tape and Reel Information

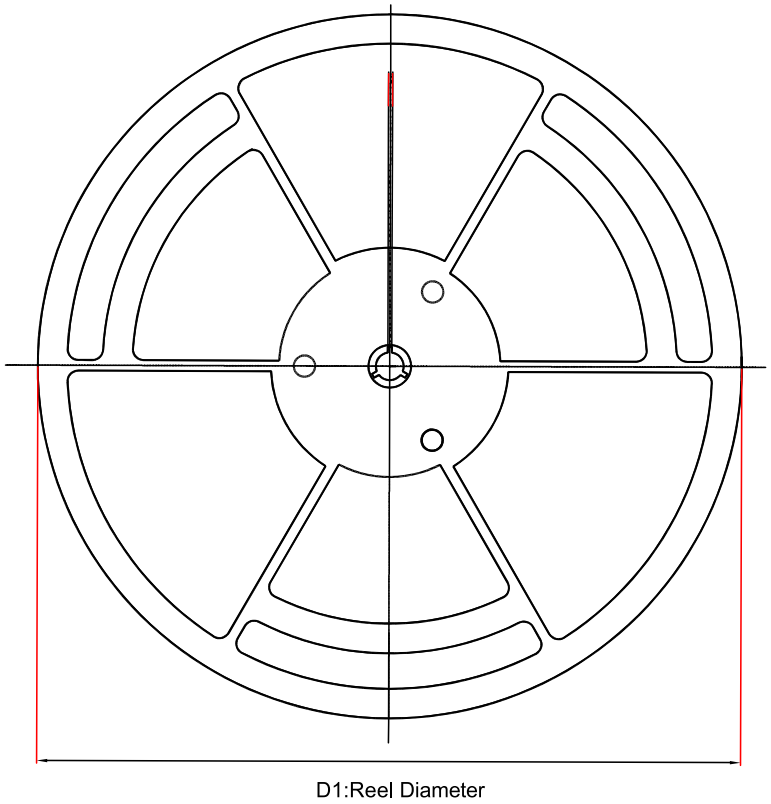

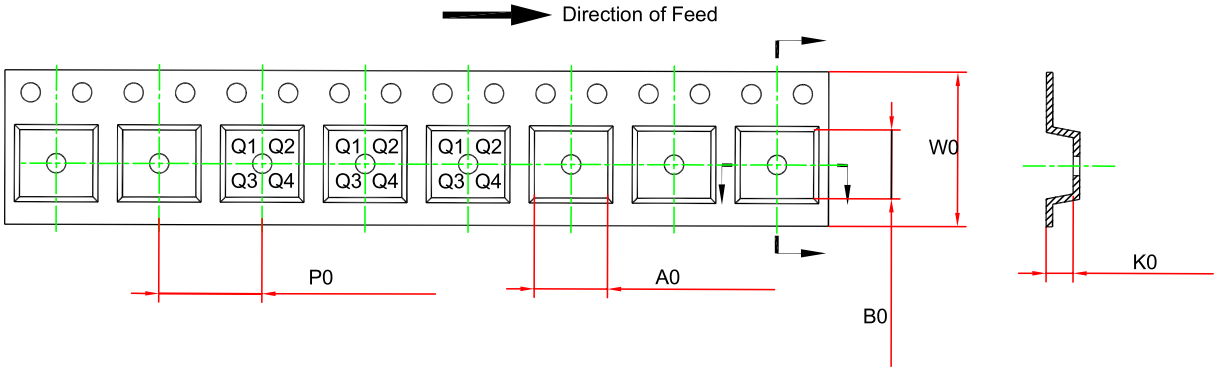

Order Number	Package	D1 (mm)	W1 (mm)	A0 (mm)	B0 (mm)	K0 (mm)	P0 (mm)	W0 (mm)	Pin1 Quadrant
TPL5111733-ST4R	SOT223-3	330	17.6	6.8	7.3	1.9	8	12.2	Q3
TPL5111750-ST4R	SOT223-3	330	17.6	6.8	7.3	1.9	8	12.2	Q3

Package Outline Dimensions

SOT223-3

Package Outline Dimensions ST4(SOT223-3-A)

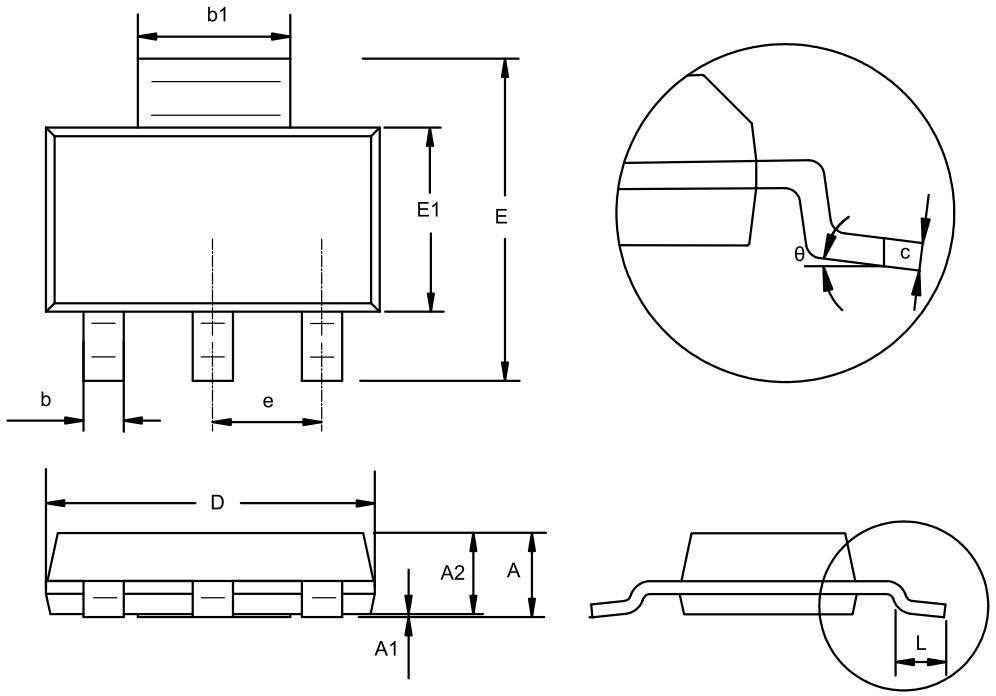

Symbol	Dimensions In Millimeters		Dimensions In Inches	
	MIN	MAX	MIN	MAX
A	1.500	1.800	0.059	0.071
A1	0.020	0.100	0.001	0.004
A2	1.500	1.700	0.059	0.067
b	0.660	0.840	0.026	0.033
b1	2.900	3.100	0.114	0.122
c	0.200	0.350	0.008	0.014
D	6.300	6.700	0.248	0.264
E	6.700	7.300	0.264	0.287
E1	3.300	3.700	0.130	0.146
e	2.300 BSC		0.091 BSC	
L	0.750	1.150	0.030	0.045
θ	0	10°	0	10°

NOTES

1. Do not include mold flash or protrusion.
2. This drawing is subject to change without notice.

Order Information

Order Number	Operating Temperature Range	Package	Marking Information	MSL	Transport Media, Quantity	Eco Plan
TPL5111733-ST4R	−40 to 125°C	SOT223-3	LEB	MSL3	4,000	Green
TPL5111750-ST4R	−40 to 125°C	SOT223-3	LEC	MSL3	4,000	Green

Green: 3PEAK defines "Green" to mean RoHS compatible and free of halogen substances.

IMPORTANT NOTICE AND DISCLAIMER

Copyright© 3PEAK 2012-2025. All rights reserved.

Trademarks. Any of the 思瑞浦 or 3PEAK trade names, trademarks, graphic marks, and domain names contained in this document /material are the property of 3PEAK. You may NOT reproduce, modify, publish, transmit or distribute any Trademark without the prior written consent of 3PEAK.

Performance Information. Performance tests or performance range contained in this document/material are either results of design simulation or actual tests conducted under designated testing environment. Any variation in testing environment or simulation environment, including but not limited to testing method, testing process or testing temperature, may affect actual performance of the product.

Disclaimer. 3PEAK provides technical and reliability data (including data sheets), design resources (including reference designs), application or other design recommendations, networking tools, security information and other resources "As Is". 3PEAK makes no warranty as to the absence of defects, and makes no warranties of any kind, express or implied, including without limitation, implied warranties as to merchantability, fitness for a particular purpose or non-infringement of any third-party's intellectual property rights. Unless otherwise specified in writing, products supplied by 3PEAK are not designed to be used in any life-threatening scenarios, including critical medical applications, automotive safety-critical systems, aviation, aerospace, or any situations where failure could result in bodily harm, loss of life, or significant property damage. 3PEAK disclaims all liability for any such unauthorized use.

This page intentionally left blank

ENTEGRECİ

Bu belge www.entegreci.com üzerinden sunulmaktadır.

Elektronik komponent tedarikinde Entegreci

Entegreci, Eskişehir merkezli, Türkiye geneline satış yapan bir elektronik komponent mağazasıdır. Entegreler (IC), mikrodenetleyiciler, transistörler, diyotlar, pasif elemanlar, konnektörler, modüller ve geliştirme kartları tek adetten seri üretim adetlerine kadar satılır. Ürün sayfalarında güncel stok durumunu, fiyatı ve datasheet bağlantısını bulabilirsiniz.

Parça koduyla arama

Üretici parça numarasını yazın; stok ve fiyatı hemen görün.

www.entegreci.com

Ürün kategorileri

Entegreden kapasitöre tüm elektronik komponent kategorileri.

Kategorilere göz atın

Üreticiler

Aradığınız üreticinin ürünlerini tek sayfada inceleyin.

Üreticileri görün

Toplu alım ve teklif

Listede olmayan ya da yüksek adetli parçalar için teklif isteyin.

Teklif isteyin

www.entegreci.com | **destek@entegreci.com** | **0850 305 90 34**

Entegreci is an online electronic components store based in Türkiye. Search by manufacturer part number to see stock, prices and datasheets for integrated circuits, microcontrollers, transistors, passive components and connectors, or request a quote for parts that are not listed.

Bu sayfa Entegreci tarafından eklenmiştir. Belgenin önceki sayfaları asıl yayıncısına aittir ve içeriği değiştirilmemiştir; en güncel sürüm için belgenin yayıncısına başvurun.