60V +175°C N-CHANNEL ENHANCEMENT MODE MOSFET
PowerDI5060-8

Product Summary

BV_{DSS}	$R_{DS(ON)}$ Max	I_D T_C = +25°C
60V	10mΩ @ V_{GS} = 10V	89.5A
	13.5mΩ @ V_{GS} = 4.5V	77A

Description

This MOSFET is designed to minimize the on-state resistance ($R_{DS(ON)}$) yet maintain superior switching performance, making it ideal for high-efficiency power-management applications.

Applications

- High frequency switching
- Sync. rectifications
- DCDC converters

Features

- Rated to +175°C – Ideal for High Ambient Temperature Environments
- 100% Unclamped Inductive Switching – Ensures More Reliable and Robust End Application
- Low $R_{DS(ON)}$ – Minimizes Power Losses
- Low Q_G – Minimizes Switching Losses
- **Lead-Free Finish; RoHS Compliant (Notes 1 & 2)**
- **Halogen and Antimony Free. "Green" Device (Note 3)**
- **For automotive applications requiring specific change control (i.e.: parts qualified to AEC-Q100/101/104/200, PPAP capable, and manufactured in IATF 16949 certified facilities), please refer to the related automotive grade (Q-suffix) part. A listing can be found at https://www.diodes.com/products/automotive/automotive-products/.**
- **This part is qualified to JEDEC standards (as references in AEC-Q) for High Reliability. https://www.diodes.com/quality/product-definitions/**

Mechanical Data

- Package: PowerDI®5060-8
- Package Material: Molded Plastic, "Green" Molding Compound. UL Flammability Classification Rating 94V-0
- Moisture Sensitivity: Level 1 per J-STD-020
- Terminal Finish – Matte Tin Annealed over Copper Leadframe. Solderable per MIL-STD-202, Method 208 e3
- Weight: 0.097 grams (Approximate)

Site 1:

PowerDI5060-8

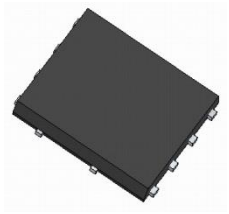

Top View

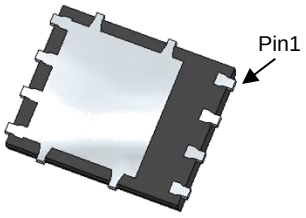

Bottom View

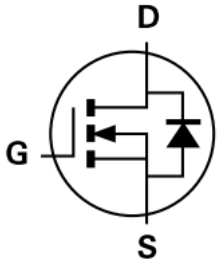

Internal Schematic

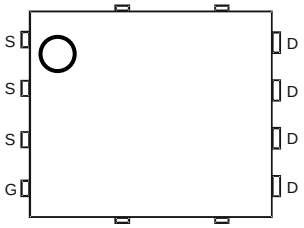

Top View
Pin Configuration

Site 2:

PowerDI5060-8/SWP (Type UX)

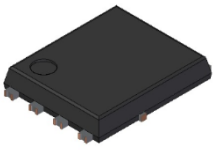

Top View

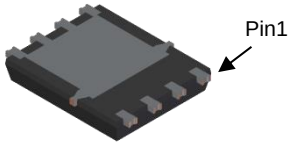

Bottom View

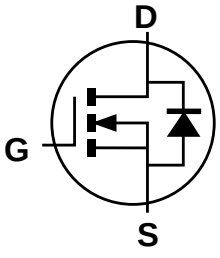

Internal Schematic

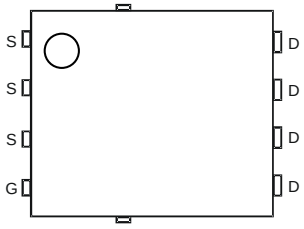

Top View
Pin Configuration

Notes:
1. EU Directive 2002/95/EC (RoHS), 2011/65/EU (RoHS 2) & 2015/863/EU (RoHS 3) compliant. All applicable RoHS exemptions applied.
2. See https://www.diodes.com/quality/lead-free/ for more information about Diodes Incorporated's definitions of Halogen- and Antimony-free, "Green" and Lead-free.
3. Halogen- and Antimony-free "Green" products are defined as those which contain <900ppm bromine, <900ppm chlorine (<1500ppm total Br + Cl) and <1000ppm antimony compounds.

© 2023 Copyright Diodes Incorporated. All Rights Reserved.

Ordering Information (Note 4)

Part Number	Package	Packing	
		Qty.	Carrier
DMTH6009SPS-13	PowerDI5060-8	2,500	Tape & Reel
DMTH6009SPS-13	PowerDI5060-8/SWP (Type UX)	2,500	Tape & Reel

Note: 4. For packaging details, go to our website at https://www.diodes.com/design/support/packaging/diodes-packaging/.

Marking Information

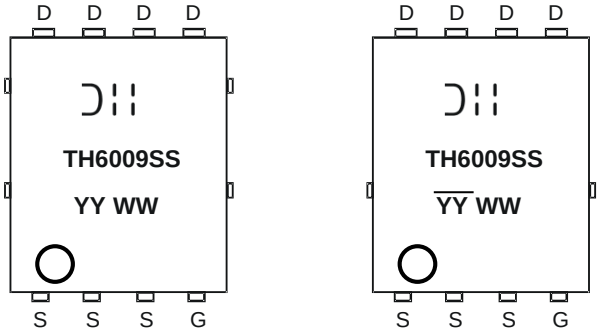

= Manufacturer's Code Marking
TH6009SS = Product Type Marking Code
YYWW = Date Code Marking
YY or $\overline{YY}$ = Year (ex: 23 = 2023)
WW = Week (01 to 53)

Maximum Ratings (@T_A = +25°C, unless otherwise specified.)

Characteristic		Symbol	Value	Unit
Drain-Source Voltage		V_{DSS}	60	V
Gate-Source Voltage		V_{GSS}	±20	V
Continuous Drain Current (Note 5)	T_A = +25°C T_A = +100°C	I_D	12.9 9.1	A
Continuous Drain Current (Note 6)	T_C = +25°C T_C = +100°C	I_D	89.5 63.3	A
Maximum Continuous Body Diode Forward Current (Note 6)		I_S	80	A
Pulsed Drain Current (10µs Pulse, Duty Cycle = 1%)		I_{DM}	350	A
Pulsed Body Diode Forward Current (10µs Pulse, Duty Cycle = 1%)		I_{SM}	350	A
Avalanche Current, L = 0.1mH		I_{AS}	20.3	A
Avalanche Energy, L = 0.1mH		E_{AS}	20.6	mJ

Thermal Characteristics

Characteristic		Symbol	Value	Unit
Total Power Dissipation (Note 5)	T_A = +25°C	P_D	2.8	W
Thermal Resistance, Junction to Ambient (Note 5)		$R_{\theta JA}$	53	°C/W
Total Power Dissipation (Note 6)	T_C = +25°C	P_D	136	W
Thermal Resistance, Junction to Case (Note 6)		$R_{\theta JC}$	1.1	°C/W
Operating and Storage Temperature Range		T_J, T_{STG}	-55 to +175	°C

Notes: 5. Device mounted on FR-4 substrate PC board, 2oz copper, with thermal bias to bottom layer 1-inch square copper plate.
6. Thermal resistance from junction to soldering point (on the exposed drain pad).

© 2023 Copyright Diodes Incorporated. All Rights Reserved.

Electrical Characteristics (@T_A = +25°C, unless otherwise specified.)

Characteristic	Symbol	Min	Typ	Max	Unit	Test Condition
OFF CHARACTERISTICS (Note 7)						
Drain-Source Breakdown Voltage	BV_{DSS}	60	—	—	V	V_{GS} = 0V, I_D = 1mA
Zero Gate Voltage Drain Current	I_{DSS}	—	—	1	μA	V_{DS} = 48V, V_{GS} = 0V
Gate-Source Leakage	I_{GSS}	—	—	±100	nA	V_{GS} = ±20V, V_{DS} = 0V
ON CHARACTERISTICS (Note 7)						
Gate Threshold Voltage	$V_{GS(TH)}$	1.2	—	2.8	V	V_{DS} = V_{GS}, I_D = 250μA
Static Drain-Source On-Resistance	$R_{DS(ON)}$	—	7.6	10	mΩ	V_{GS} = 10V, I_D = 20A
		—	10.7	13.5		V_{GS} = 4.5V, I_D = 15A
Diode Forward Voltage	V_{SD}	—	0.9	1.2	V	V_{GS} = 0V, I_S = 20A
DYNAMIC CHARACTERISTICS (Note 8)						
Input Capacitance	C_{iss}	—	1572	—	pF	V_{DS} = 30V, V_{GS} = 0V, f = 1MHz
Output Capacitance	C_{oss}	—	490	—		
Reverse Transfer Capacitance	C_{rss}	—	50	—		
Gate Resistance	R_g	—	1.6	—	Ω	V_{DS} = 0V, V_{GS} = 0V, f = 1MHz
Total Gate Charge (V_{GS} = 10V)	Q_g	—	29.3	—	nC	V_{DS} = 30V, I_D = 13.5A
Total Gate Charge (V_{GS} = 4.5V)	Q_g	—	13.9	—		
Gate-Source Charge	Q_{gs}	—	4.3	—		
Gate-Drain Charge	Q_{gd}	—	5.9	—		
Turn-On Delay Time	$t_{D(ON)}$	—	5.4	—	ns	V_{DD} = 30V, V_{GS} = 10V, R_G = 6Ω, I_D = 13.5A
Turn-On Rise Time	t_R	—	9.8	—		
Turn-Off Delay Time	$t_{D(OFF)}$	—	28.1	—		
Turn-Off Fall Time	t_F	—	16.3	—		
Body Diode Reverse Recovery Time	t_{RR}	—	17.2	—	ns	I_F = 13.5A, di/dt = 400A/μs
Body Diode Reverse Recovery Charge	Q_{RR}	—	25.1	—	nC	

Notes: 7. Short duration pulse test used to minimize self-heating effect.
8. Guaranteed by design. Not subject to product testing.

© 2023 Copyright Diodes Incorporated. All Rights Reserved.

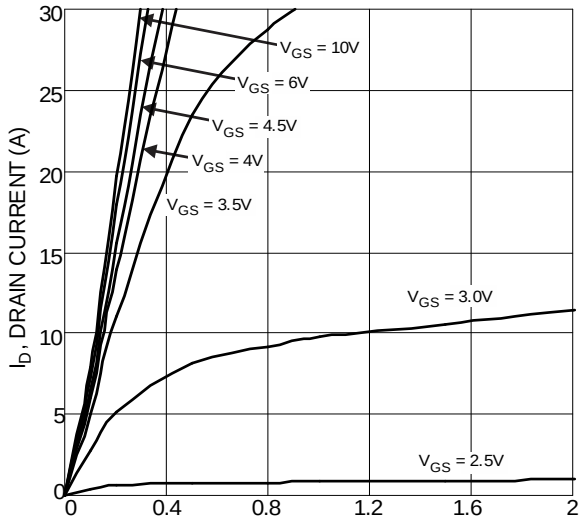

Figure 1 Typical Output Characteristic

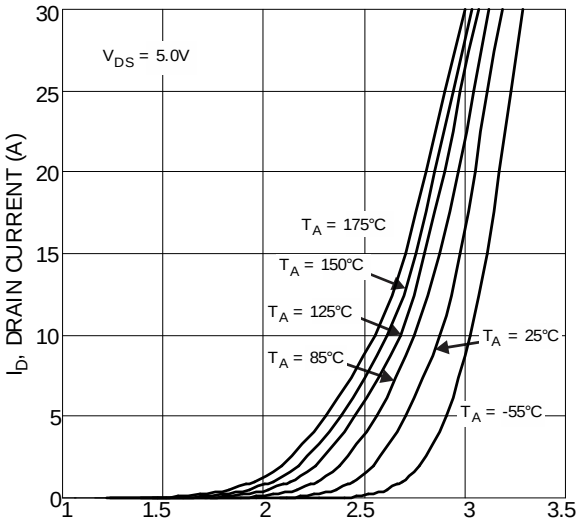

Figure 2 Typical Transfer Characteristics

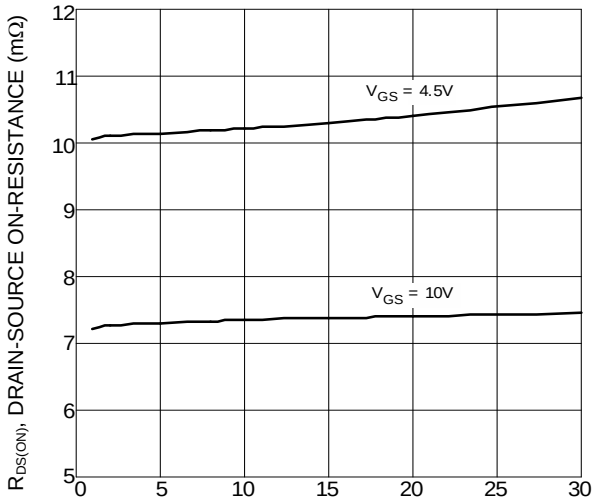

Figure 3 Typical On-Resistance vs. Drain Current and Gate Voltage

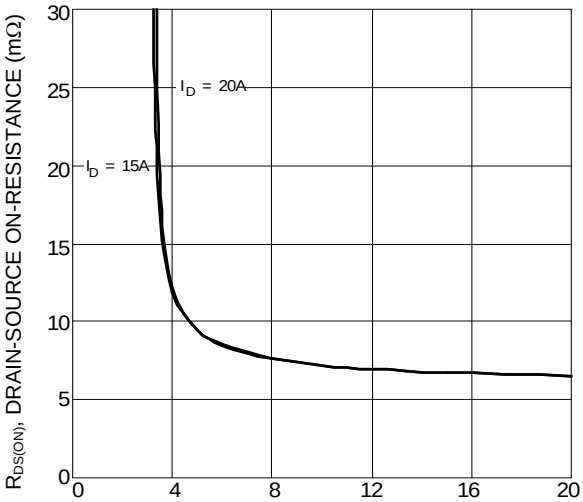

Figure 4 Typical Drain-Source On-Resistance vs. Gate-Source Voltage

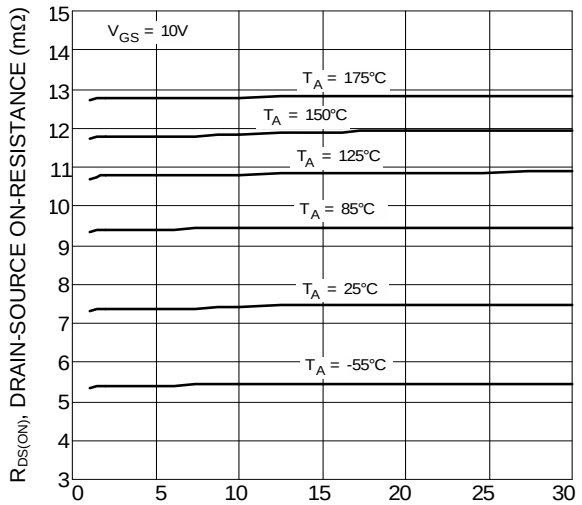

Figure 5 Typical On-Resistance vs. Drain Current and Temperature

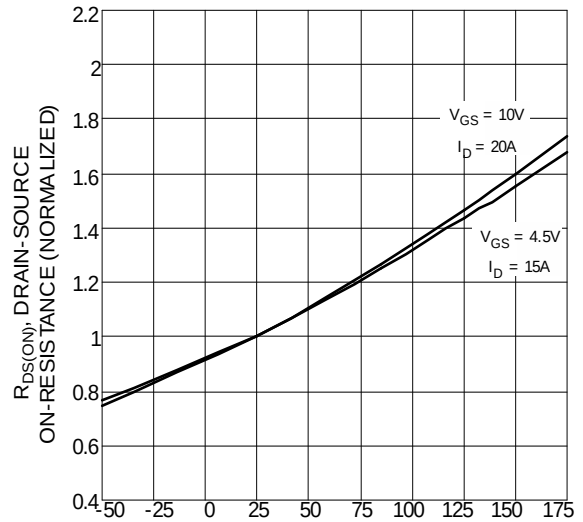

Figure 6 On-Resistance Variation with Temperature

© 2023 Copyright Diodes Incorporated. All Rights Reserved.

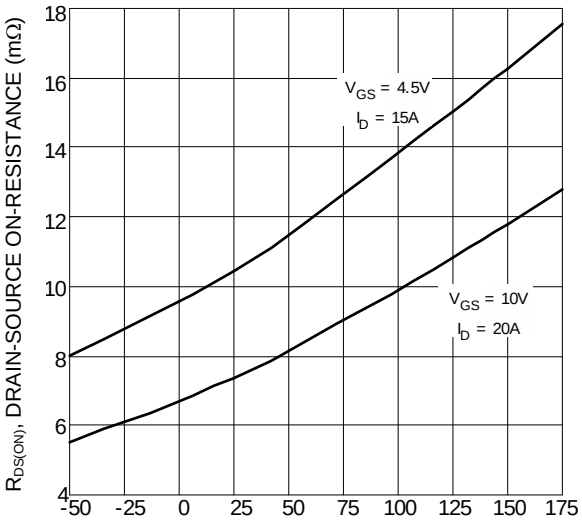

Figure 7 On-Resistance Variation with Temperature

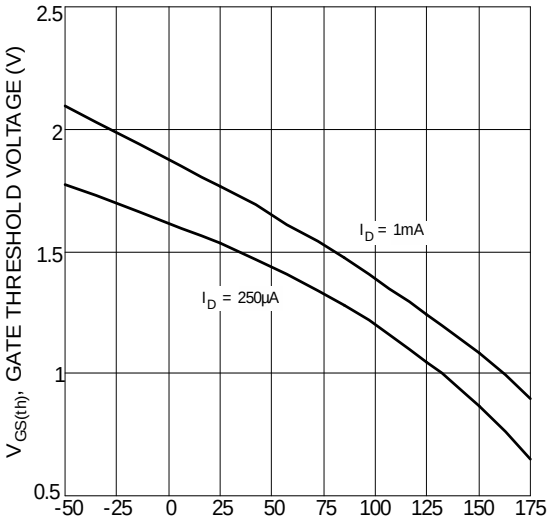

Figure 8 Threshold Variation vs. Temperature

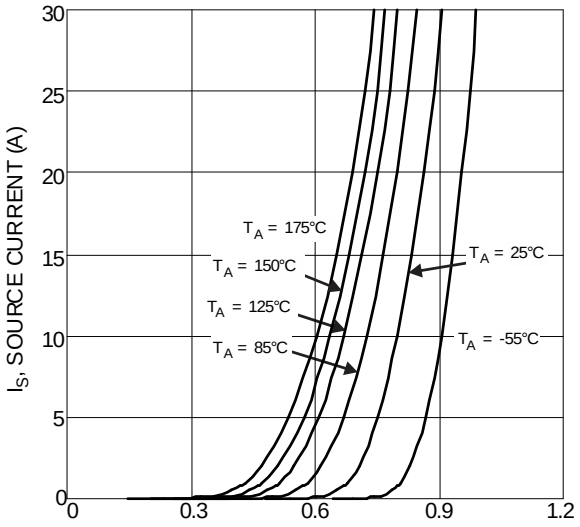

Figure 9 Diode Forward Voltage vs. Current

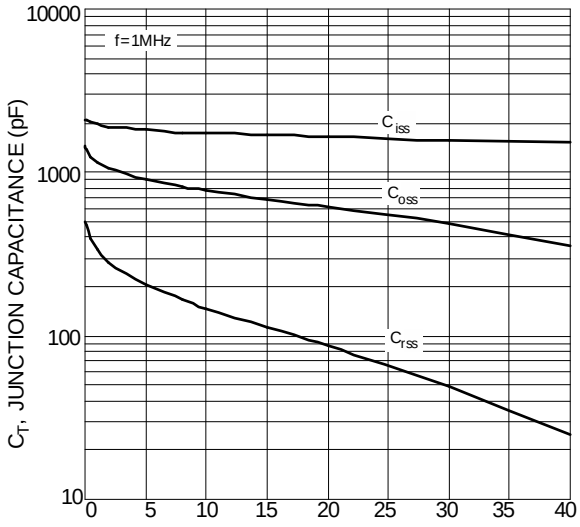

Figure 10 Typical Junction Capacitance

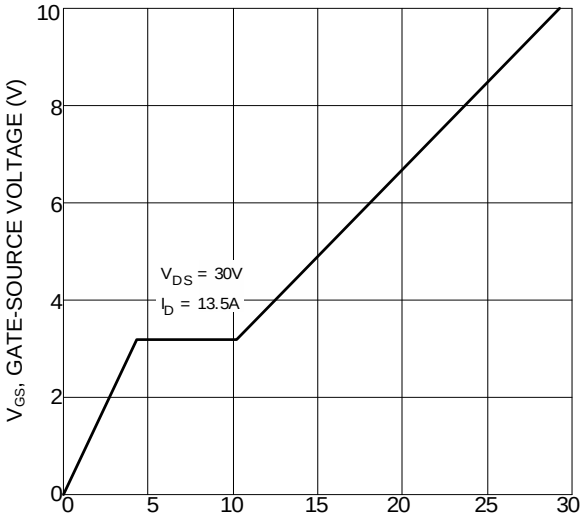

Figure 11 Gate Charge

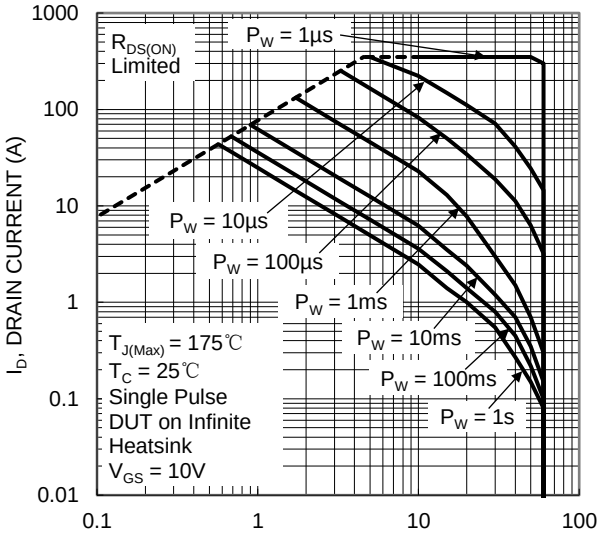

Figure 12. SOA, Safe Operation Area

© 2023 Copyright Diodes Incorporated. All Rights Reserved.

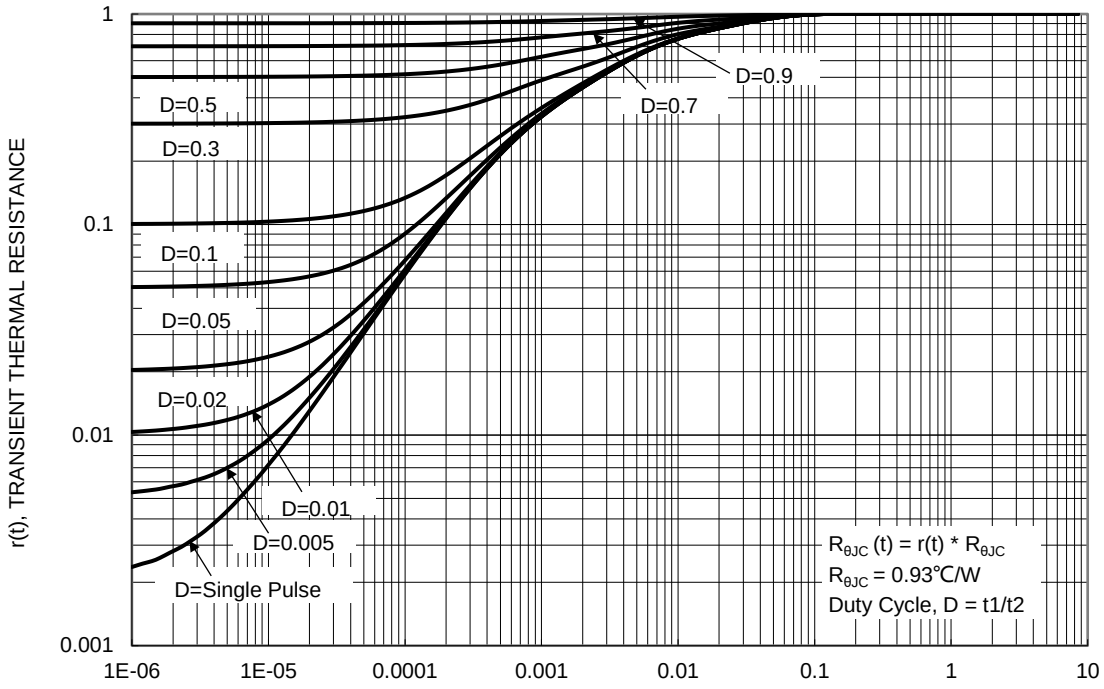

Figure 13. Transient Thermal Resistance

© 2023 Copyright Diodes Incorporated. All Rights Reserved.

Package Outline Dimensions

Please see http://www.diodes.com/package-outlines.html for the latest version.

Site 1:

PowerDI5060-8

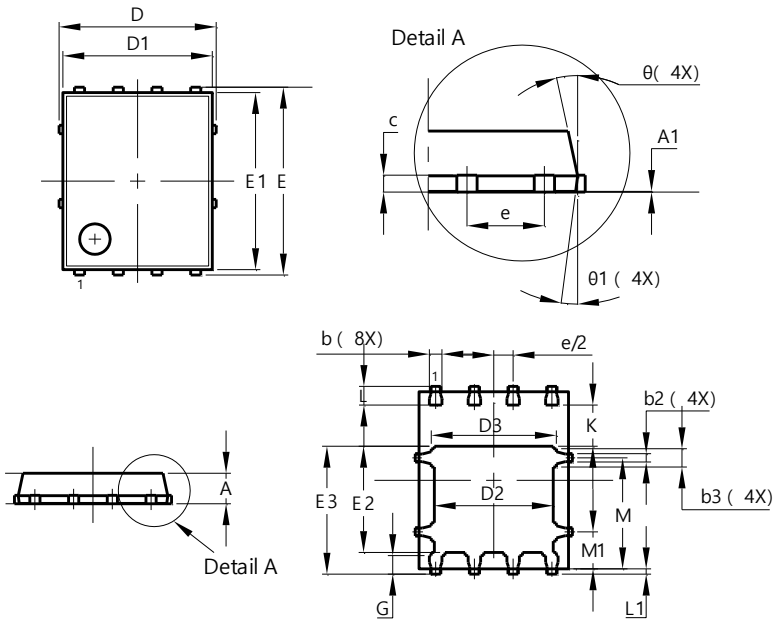

PowerDI5060-8			
Dim	**Min**	**Max**	**Typ**
A	0.90	1.10	1.00
A1	0.00	0.05	–
b	0.33	0.51	0.41
b2	0.200	0.350	0.273
b3	0.40	0.80	0.60
c	0.230	0.330	0.277
D	5.15 BSC		
D1	4.70	5.10	4.90
D2	3.70	4.10	3.90
D3	3.90	4.30	4.10
E	6.15 BSC		
E1	5.60	6.00	5.80
E2	3.28	3.68	3.48
E3	3.99	4.39	4.19
e	1.27 BSC		
G	0.51	0.71	0.61
K	0.51	–	–
L	0.51	0.71	0.61
L1	0.100	0.200	0.175
M	3.235	4.035	3.635
M1	1.00	1.40	1.21
Θ	10°	12°	11°
Θ1	6°	8°	7°
All Dimensions in mm			

Site 2:

PowerDI5060-8/SWP (Type UX)

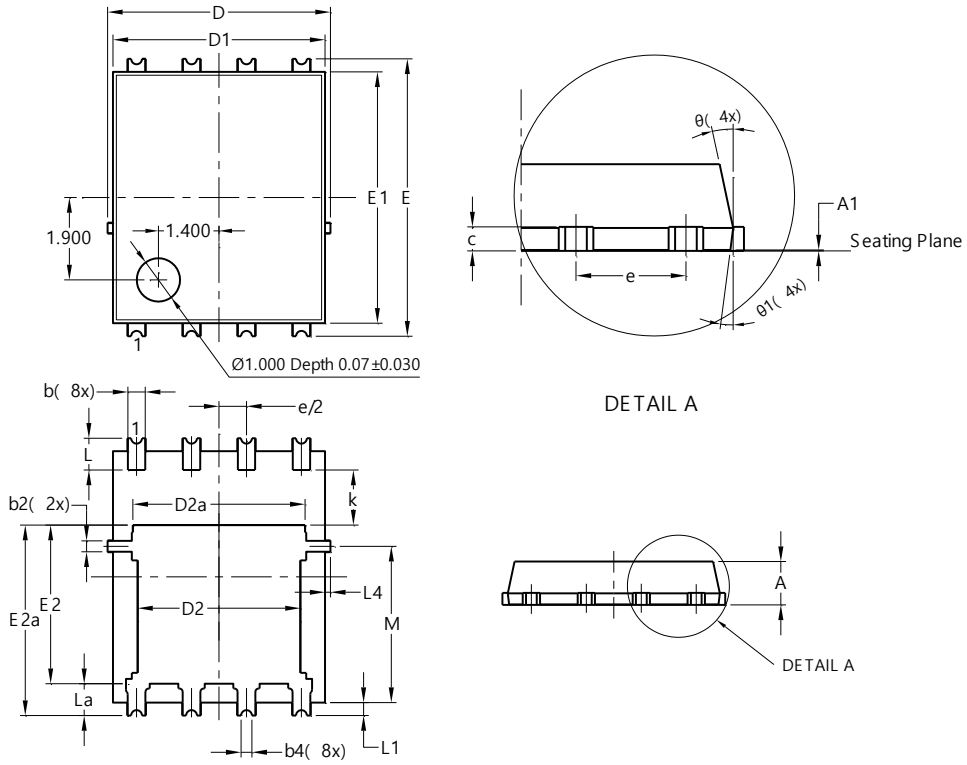

PowerDI5060-8/SWP (Type UX)			
Dim	**Min**	**Max**	**Typ**
A	0.90	1.10	1.00
A1	0	0.05	--
b	0.30	0.50	0.41
b2	0.20	0.35	0.25
b4	0.25REF		
c	0.230	0.330	0.277
D	5.15 BSC		
D1	4.70	5.10	4.90
D2	3.56	3.96	3.76
D2a	3.78	4.18	3.98
E	6.40 BSC		
E1	5.60	6.00	5.80
E2	3.46	3.86	3.66
E2a	4.195	4.595	4.395
e	1.27BSC		
k	1.05	--	--
L	0.635	0.835	0.735
La	0.635	0.835	0.735
L1	0.200	0.400	0.300
L1a	0.050REF		
L4	0.025	0.225	0.125
M	3.205	4.005	3.605
θ	10°	12°	11°
θ1	6°	8°	7°
All Dimensions in mm			

© 2023 Copyright Diodes Incorporated. All Rights Reserved.

Suggested Pad Layout

Please see http://www.diodes.com/package-outlines.html for the latest version.

Site 1:

PowerDI5060-8

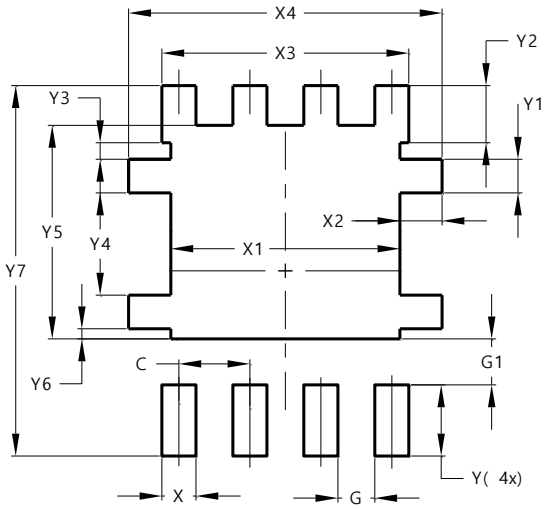

Dimensions	Value (in mm)
C	1.270
G	0.660
G1	0.820
X	0.610
X1	4.100
X2	0.755
X3	4.420
X4	5.610
Y	1.270
Y1	0.600
Y2	1.020
Y3	0.295
Y4	1.825
Y5	3.810
Y6	0.180
Y7	6.610

Site 2:

PowerDI5060-8/SWP (Type UX)

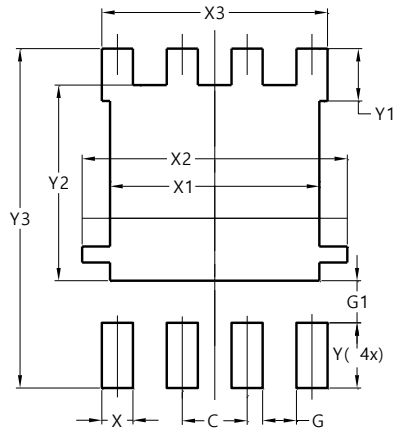

Dimensions	Value (in mm)
C	1.270
G	0.660
G1	0.820
X	0.610
X1	4.100
X2	5.190
X3	4.420
Y	1.270
Y1	1.020
Y2	3.810
Y3	6.610

© 2023 Copyright Diodes Incorporated. All Rights Reserved.

IMPORTANT NOTICE

1. DIODES INCORPORATED (Diodes) AND ITS SUBSIDIARIES MAKE NO WARRANTY OF ANY KIND, EXPRESS OR IMPLIED, WITH REGARDS TO ANY INFORMATION CONTAINED IN THIS DOCUMENT, INCLUDING, BUT NOT LIMITED TO, THE IMPLIED WARRANTIES OF MERCHANTABILITY, FITNESS FOR A PARTICULAR PURPOSE OR NON-INFRINGEMENT OF THIRD PARTY INTELLECTUAL PROPERTY RIGHTS (AND THEIR EQUIVALENTS UNDER THE LAWS OF ANY JURISDICTION).

2. The Information contained herein is for informational purpose only and is provided only to illustrate the operation of Diodes' products described herein and application examples. Diodes does not assume any liability arising out of the application or use of this document or any product described herein. This document is intended for skilled and technically trained engineering customers and users who design with Diodes' products. Diodes' products may be used to facilitate safety-related applications; however, in all instances customers and users are responsible for (a) selecting the appropriate Diodes products for their applications, (b) evaluating the suitability of Diodes' products for their intended applications, (c) ensuring their applications, which incorporate Diodes' products, comply the applicable legal and regulatory requirements as well as safety and functional-safety related standards, and (d) ensuring they design with appropriate safeguards (including testing, validation, quality control techniques, redundancy, malfunction prevention, and appropriate treatment for aging degradation) to minimize the risks associated with their applications.

3. Diodes assumes no liability for any application-related information, support, assistance or feedback that may be provided by Diodes from time to time. Any customer or user of this document or products described herein will assume all risks and liabilities associated with such use, and will hold Diodes and all companies whose products are represented herein or on Diodes' websites, harmless against all damages and liabilities.

4. Products described herein may be covered by one or more United States, international or foreign patents and pending patent applications. Product names and markings noted herein may also be covered by one or more United States, international or foreign trademarks and trademark applications. Diodes does not convey any license under any of its intellectual property rights or the rights of any third parties (including third parties whose products and services may be described in this document or on Diodes' website) under this document.

5. Diodes' products are provided subject to Diodes' Standard Terms and Conditions of Sale (https://www.diodes.com/about/company/terms-and-conditions/terms-and-conditions-of-sales/) or other applicable terms. This document does not alter or expand the applicable warranties provided by Diodes. Diodes does not warrant or accept any liability whatsoever in respect of any products purchased through unauthorized sales channel.

6. Diodes' products and technology may not be used for or incorporated into any products or systems whose manufacture, use or sale is prohibited under any applicable laws and regulations. Should customers or users use Diodes' products in contravention of any applicable laws or regulations, or for any unintended or unauthorized application, customers and users will (a) be solely responsible for any damages, losses or penalties arising in connection therewith or as a result thereof, and (b) indemnify and hold Diodes and its representatives and agents harmless against any and all claims, damages, expenses, and attorney fees arising out of, directly or indirectly, any claim relating to any noncompliance with the applicable laws and regulations, as well as any unintended or unauthorized application.

7. While efforts have been made to ensure the information contained in this document is accurate, complete and current, it may contain technical inaccuracies, omissions and typographical errors. Diodes does not warrant that information contained in this document is error-free and Diodes is under no obligation to update or otherwise correct this information. Notwithstanding the foregoing, Diodes reserves the right to make modifications, enhancements, improvements, corrections or other changes without further notice to this document and any product described herein. This document is written in English but may be translated into multiple languages for reference. Only the English version of this document is the final and determinative format released by Diodes.

8. Any unauthorized copying, modification, distribution, transmission, display or other use of this document (or any portion hereof) is prohibited. Diodes assumes no responsibility for any losses incurred by the customers or users or any third parties arising from any such unauthorized use.

9. This Notice may be periodically updated with the most recent version available at https://www.diodes.com/about/company/terms-and-conditions/important-notice

The Diodes logo is a registered trademark of Diodes Incorporated in the United States and other countries.
All other trademarks are the property of their respective owners.
© 2023 Diodes Incorporated. All Rights Reserved.

www.diodes.com

© 2023 Copyright Diodes Incorporated. All Rights Reserved.

ENTEGRECİ

Bu belge www.entegreci.com üzerinden sunulmaktadır.

Elektronik komponent tedarikinde Entegreci

Entegreci, Eskişehir merkezli, Türkiye geneline satış yapan bir elektronik komponent mağazasıdır. Entegreler (IC), mikrodenetleyiciler, transistörler, diyotlar, pasif elemanlar, konnektörler, modüller ve geliştirme kartları tek adetten seri üretim adetlerine kadar satılır. Ürün sayfalarında güncel stok durumunu, fiyatı ve datasheet bağlantısını bulabilirsiniz.

Parça koduyla arama

Üretici parça numarasını yazın; stok ve fiyatı hemen görün.

www.entegreci.com

Ürün kategorileri

Entegreden kapasitöre tüm elektronik komponent kategorileri.

Kategorilere göz atın

Üreticiler

Aradığınız üreticinin ürünlerini tek sayfada inceleyin.

Üreticileri görün

Toplu alım ve teklif

Listede olmayan ya da yüksek adetli parçalar için teklif isteyin.

Teklif isteyin

www.entegreci.com | **destek@entegreci.com** | **0850 305 90 34**

Entegreci is an online electronic components store based in Türkiye. Search by manufacturer part number to see stock, prices and datasheets for integrated circuits, microcontrollers, transistors, passive components and connectors, or request a quote for parts that are not listed.

Bu sayfa Entegreci tarafından eklenmiştir. Belgenin önceki sayfaları asıl yayıncısına aittir ve içeriği değiştirilmemiştir; en güncel sürüm için belgenin yayıncısına başvurun.