175°C P-CHANNEL ENHANCEMENT MODE MOSFET POWERDI®

NEW PRODUCT

Product Summary

$V_{(BR)DSS}$	$R_{DS(ON)}$ Max	I_D T_C = +25°C
-30V	7.5mΩ @ V_{GS} = -10V	-60A
	10mΩ @ V_{GS} = -4.5V	-50A

Features and Benefits

- Rated to +175°C – Ideal for High Ambient Temperature Environments
- 100% Unclamped Inductive Switch (UIS) Test in Production
- Low On-Resistance
- Fast Switching Speed
- **Lead-Free Finish; RoHS Compliant (Notes 1 & 2)**
- **Halogen and Antimony Free. "Green" Device (Note 3)**
- **Qualified to AEC-Q101 Standards for High Reliability**

Description and Applications

This new generation MOSFET is designed to minimize the on-state resistance ($R_{DS(ON)}$) and yet maintain superior switching performance, making it ideal for high efficiency power management applications.

- DC-DC Converters
- Power Management Functions
- Analog Switch

Mechanical Data

- Case: POWERDI®5060-8
- Case Material: Molded Plastic, "Green" Molding Compound. UL Flammability Classification Rating 94V-0
- Moisture Sensitivity: Level 1 per J-STD-020
- Terminal Connections: See Diagram
- Terminals: Finish – 100% Matte Tin Annealed over Copper Leadframe. Solderable per MIL-STD-202, Method 208 e3
- Weight: 0.097 grams (Approximate)



Top View

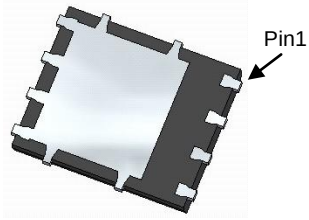

Bottom View

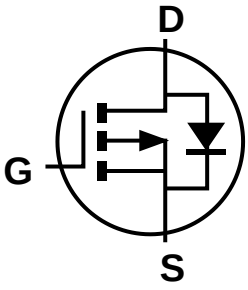

Internal Schematic

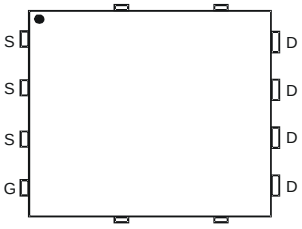

Top View
Pin Configuration

Ordering Information (Note 4)

Part Number	Case	Packaging
DMPH3010LPS-13	POWERDI®5060-8	2,500 / Tape & Reel

Notes:
1. EU Directive 2002/95/EC (RoHS) & 2011/65/EU (RoHS 2) compliant. All applicable RoHS exemptions applied.
2. See http://www.diodes.com/quality/lead_free.html for more information about Diodes Incorporated's definitions of Halogen- and Antimony-free, "Green" and Lead-free.
3. Halogen- and Antimony-free "Green" products are defined as those which contain <900ppm bromine, <900ppm chlorine (<1500ppm total Br + Cl) and <1000ppm antimony compounds.
4. For packaging details, go to our website at http://www.diodes.com/products/packages.html.

Marking Information

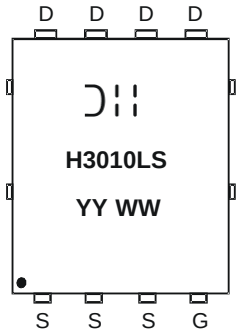

= Manufacturer's Marking
H3010LS = Product Type Marking Code
YYWW = Date Code Marking
YY = Year (ex: 15 = 2015)
WW = Week (01 to 53)

POWERDI is a registered trademark of Diodes Incorporated

© Diodes Incorporated

NEW PRODUCT

Maximum Ratings (@T_A = +25°C, unless otherwise specified.)

Characteristic			Symbol	Value	Unit
Drain-Source Voltage			V_{DSS}	-30	V
Gate-Source Voltage			V_{GSS}	±20	V
Continuous Drain Current (Note 6), V_{GS} = -10V	Steady State	T_C = +25°C T_C = +100°C	I_D	-60 -40	A
	Steady State	T_A = +25°C T_A = +100°C	I_D	-15 -11	A
Pulsed Drain Current (10µs Pulse, Duty Cycle = 1%)			I_{DM}	-100	A
Maximum Body Diode Continuous Current (Note 6)			I_S	-3.5	A
Avalanche Current (Note 7), L = 0.1mH			I_{AS}	-47	A
Avalanche Energy (Note 7), L = 0.1mH			E_{AS}	113	mJ

Thermal Characteristics (@T_A = +25°C, unless otherwise specified.)

Characteristic		Symbol	Value	Unit
Total Power Dissipation (Note 5)	T_A = +25°C	P_D	1.5	W
Thermal Resistance, Junction to Ambient (Note 5)	Steady State	$R_{\theta JA}$	98	°C/W
Total Power Dissipation (Note 6)	T_A = +25°C	P_D	2.6	W
Thermal Resistance, Junction to Ambient (Note 6)	Steady State	$R_{\theta JA}$	58	°C/W
Thermal Resistance, Junction to Case		$R_{\theta JC}$	0.9	°C/W
Operating and Storage Temperature Range		T_J, T_{STG}	-55 to +175	°C

Electrical Characteristics (@T_A = +25°C, unless otherwise specified.)

Characteristic	Symbol	Min	Typ	Max	Unit	Test Condition
OFF CHARACTERISTICS (Note 8)						
Drain-Source Breakdown Voltage	BV_{DSS}	-30	—	—	V	V_{GS} = 0V, I_D = -250µA
Zero Gate Voltage Drain Current	I_{DSS}	—	—	-1.0	µA	V_{DS} = -30V, V_{GS} = 0V
Gate-Source Leakage	I_{GSS}	—	—	±100	nA	V_{GS} = ±20V, V_{DS} = 0V
ON CHARACTERISTICS (Note 8)						
Gate Threshold Voltage	$V_{GS(TH)}$	-1.1	-1.6	-2.1	V	V_{DS} = V_{GS}, I_D = -250µA
Static Drain-Source On-Resistance	$R_{DS(ON)}$	—	5.7	7.5	mΩ	V_{GS} = -10V, I_D = -10A
		—	7.2	10		V_{GS} = -4.5V, I_D = -10A
Diode Forward Voltage	V_{SD}	—	-0.65	-1.0	V	V_{GS} = 0V, I_S = -1A
DYNAMIC CHARACTERISTICS (Note 9)						
Input Capacitance	C_{iss}	—	6807	—	pF	V_{DS} = -15V, V_{GS} = 0V, f = 1.0MHz
Output Capacitance	C_{oss}	—	988	—	pF	
Reverse Transfer Capacitance	C_{rss}	—	647	—	pF	
Gate Resistance	R_g	—	6.2	—	Ω	V_{DS} = 0V, V_{GS} = 0V, f = 1MHz
Total Gate Charge (V_{GS} = -4.5V)	Q_g	—	66	—	nC	V_{DS} = -15V, I_D = -10A
Total Gate Charge (V_{GS} = -10V)	Q_g	—	139	—	nC	
Gate-Source Charge	Q_{gs}	—	19.1	—	nC	
Gate-Drain Charge	Q_{gd}	—	21.7	—	nC	
Turn-On Delay Time	$t_{D(ON)}$	—	9.0	—	ns	V_{DS} = -15V, V_{GEN} = -10V, R_G = 6Ω, I_D = -1A
Turn-On Rise Time	t_R	—	10.5	—	ns	
Turn-Off Delay Time	$t_{D(OFF)}$	—	255	—	ns	
Turn-Off Fall Time	t_F	—	95	—	ns	
Body Diode Reverse Recovery Time	t_{RR}	—	27	—	ns	I_F = -10A, di/dt = -100A/µs
Body Diode Reverse Recovery Charge	Q_{RR}	—	21	—	nC	I_F = -10A, di/dt = -100A/µs

Notes:
5. Device mounted on FR-4 substrate PC board, 2oz copper, with minimum recommended pad layout.
6. Device mounted on FR-4 substrate PC board, 2oz copper, with 1inch square copper plate.
7. I_{AS} and E_{AS} ratings are based on low frequency and duty cycles to keep T_J =+ 25°C.
8. Short duration pulse test used to minimize self-heating effect.
9. Guaranteed by design. Not subject to product testing.

POWERDI is a registered trademark of Diodes Incorporated

© Diodes Incorporated

NEW PRODUCT

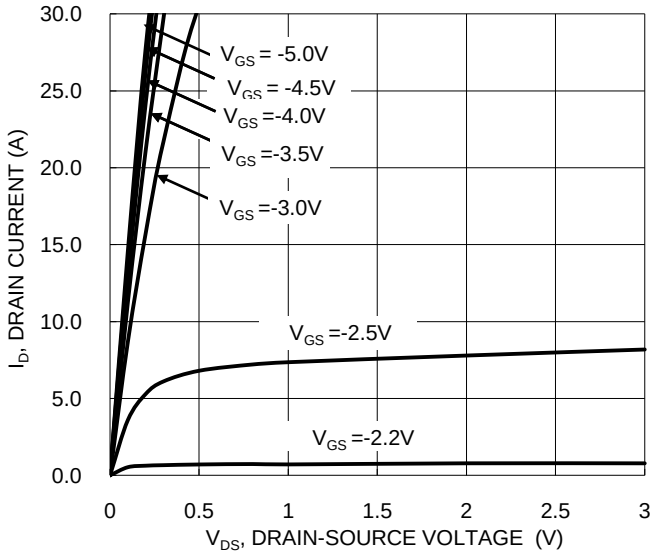

Figure 1. Typical Output Characteristic

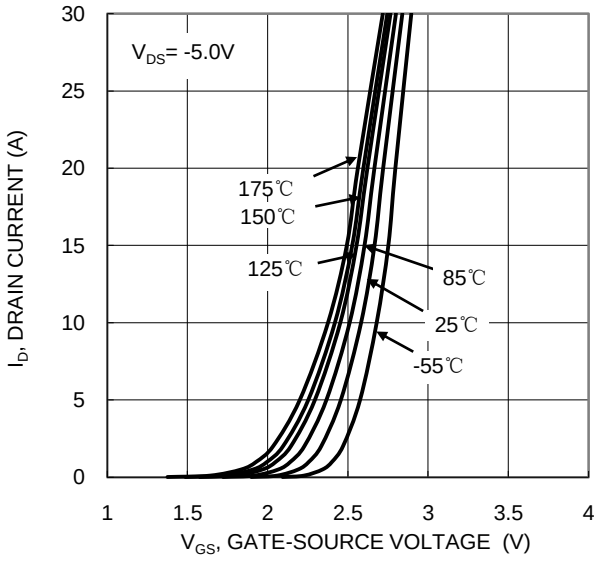

Figure 2.Typical Transfer Characteristic

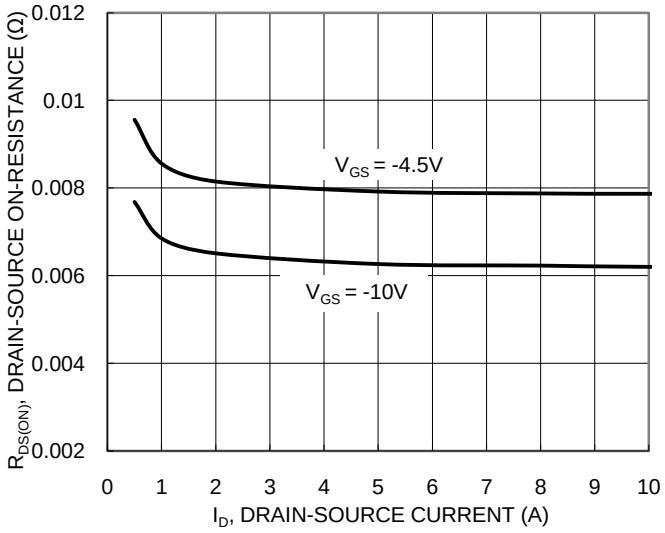

Figure 3. Typical On-Resistance vs. Drain Current and Gate Voltage

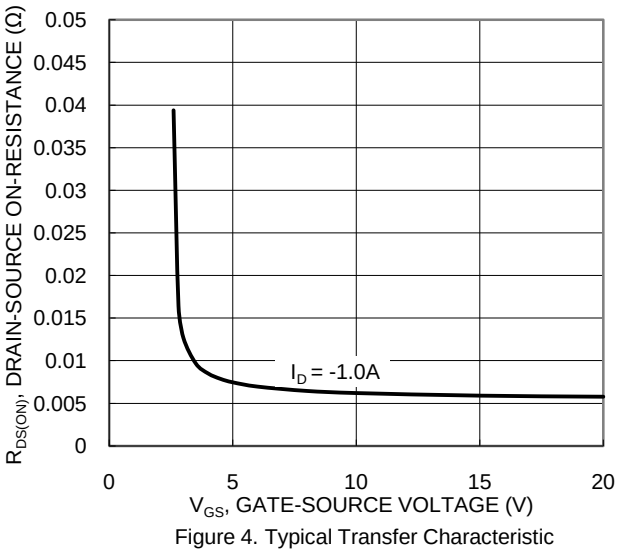

Figure 4. Typical Transfer Characteristic

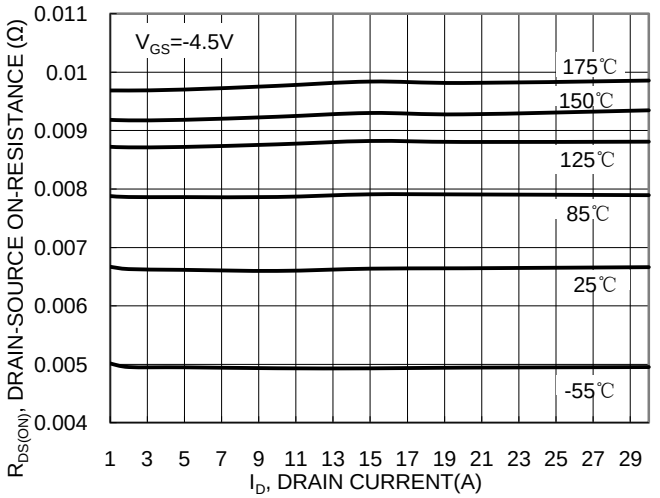

Figure 5. Typical On-Resistance vs. Drain Current and Temperature

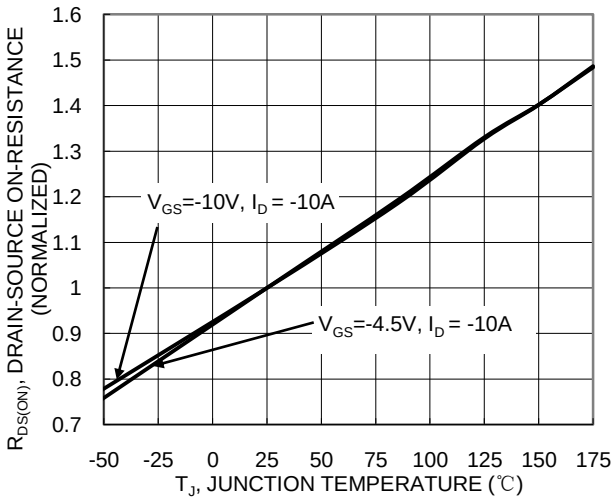

Figure 6. On-Resistance Variation with Temperature

© Diodes Incorporated

NEW PRODUCT

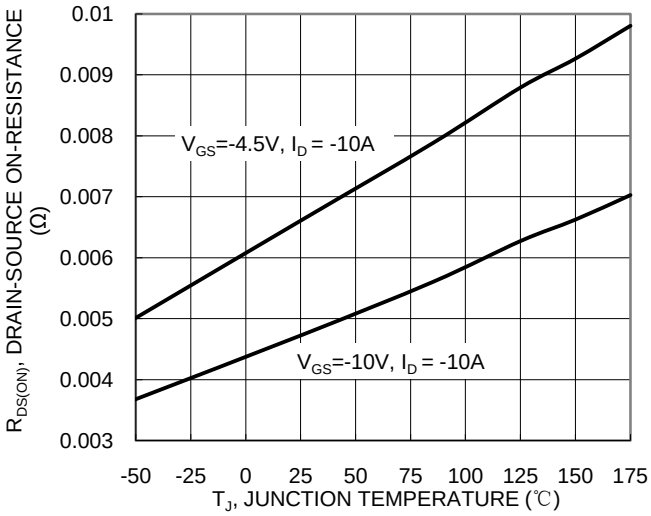

Figure 7. On-Resistance Variation with Temperature

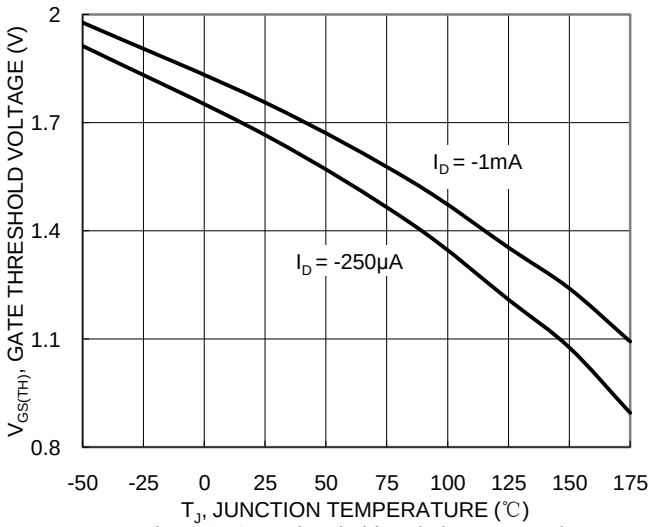

Figure 8. Gate Threshold Variation vs. Junction Temperature

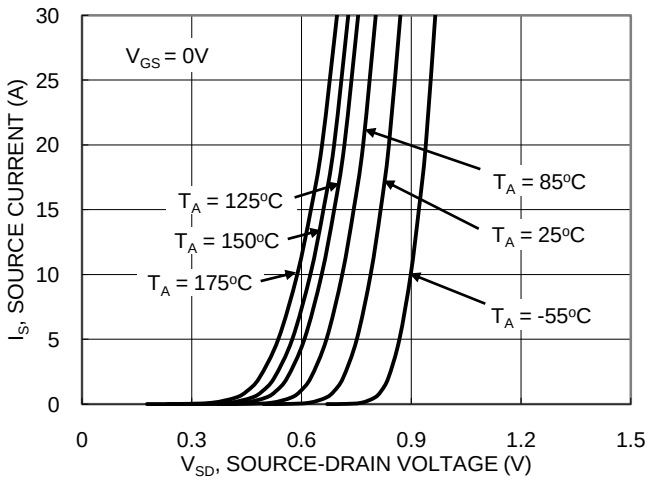

Figure 9. Diode Forward Voltage vs. Current

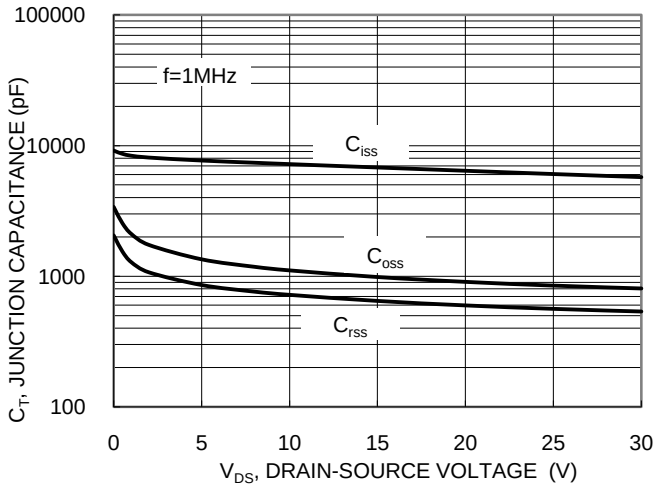

Figure 10. Typical Junction Capacitance

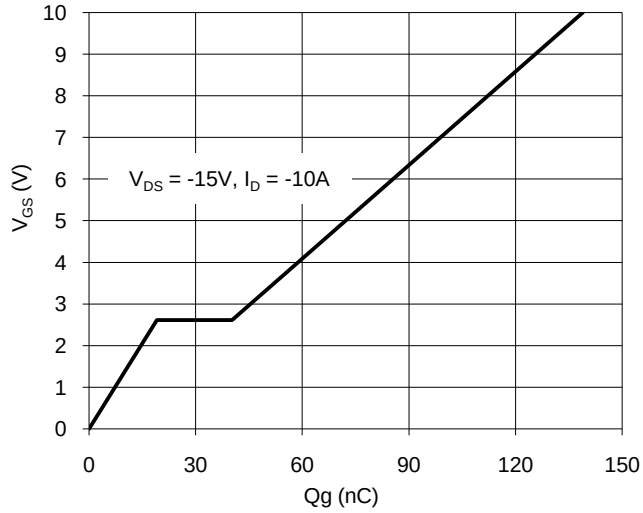

Figure 11. Gate Charge

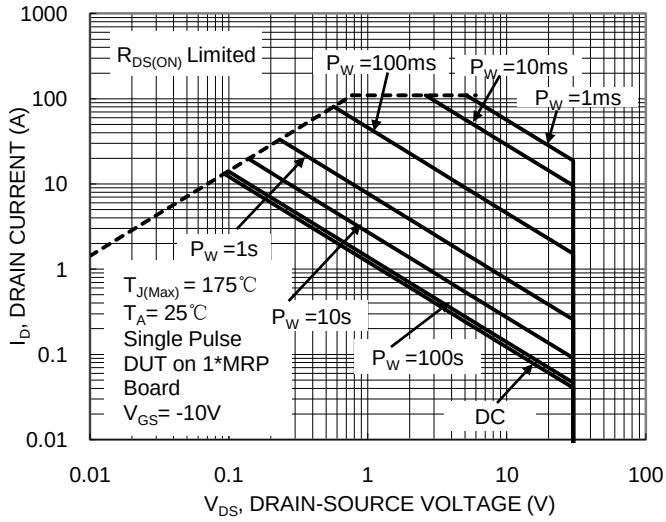

Figure 12. SOA, Safe Operation Area

© Diodes Incorporated

NEW PRODUCT

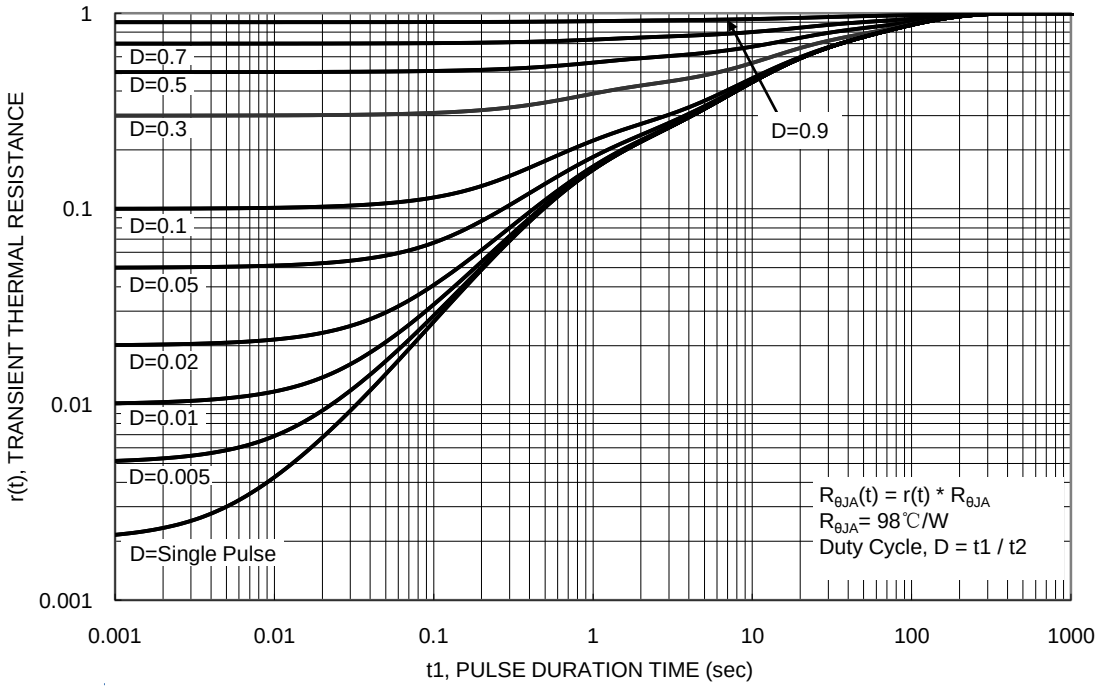

Figure 13. Transient Thermal Resistance

© Diodes Incorporated

NEW PRODUCT

Package Outline Dimensions

Please see AP02002 at http://www.diodes.com/datasheets/ap02002.pdf for the latest version.

POWERDI®5060-8

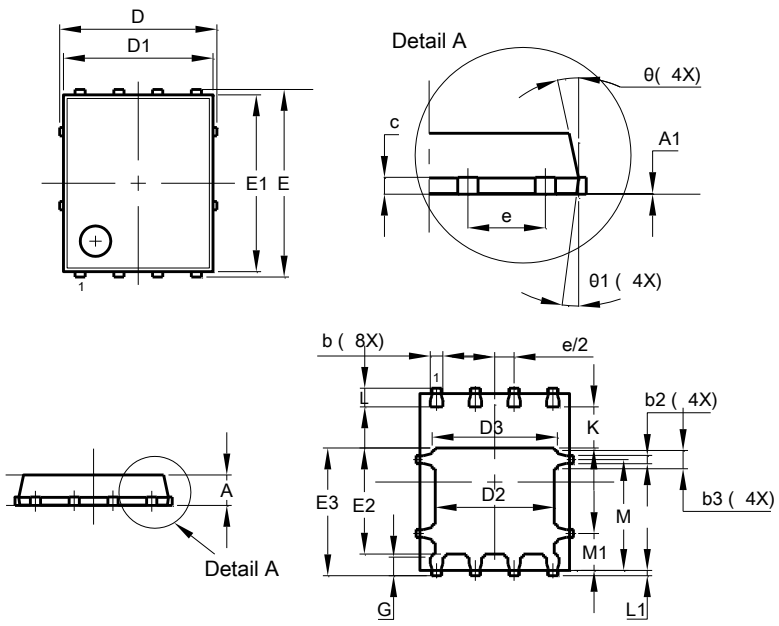

POWERDI®5060-8			
Dim	**Min**	**Max**	**Typ**
A	0.90	1.10	1.00
A1	0.00	0.05	–
b	0.33	0.51	0.41
b2	0.200	0.350	0.273
b3	0.40	0.80	0.60
c	0.230	0.330	0.277
D	5.15 BSC		
D1	4.70	5.10	4.90
D2	3.70	4.10	3.90
D3	3.90	4.30	4.10
E	6.15 BSC		
E1	5.60	6.00	5.80
E2	3.28	3.68	3.48
E3	3.99	4.39	4.19
e	1.27 BSC		
G	0.51	0.71	0.61
K	0.51	–	–
L	0.51	0.71	0.61
L1	0.100	0.200	0.175
M	3.235	4.035	3.635
M1	1.00	1.40	1.21
Θ	10º	12º	11º
Θ1	6º	8º	7º
All Dimensions in mm			

Suggested Pad Layout

Please see AP02001 at http://www.diodes.com/datasheets/ap02001.pdf for the latest version.

POWERDI®5060-8

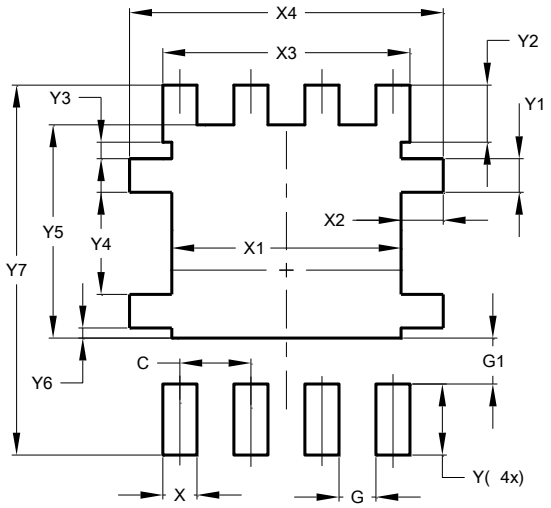

Dimensions	Value (in mm)
C	1.270
G	0.660
G1	0.820
X	0.610
X1	4.100
X2	0.755
X3	4.420
X4	5.610
Y	1.270
Y1	0.600
Y2	1.020
Y3	0.295
Y4	1.825
Y5	3.810
Y6	0.180
Y7	6.610

POWERDI is a registered trademark of Diodes Incorporated

© Diodes Incorporated

NEW PRODUCT

IMPORTANT NOTICE

DIODES INCORPORATED MAKES NO WARRANTY OF ANY KIND, EXPRESS OR IMPLIED, WITH REGARDS TO THIS DOCUMENT, INCLUDING, BUT NOT LIMITED TO, THE IMPLIED WARRANTIES OF MERCHANTABILITY AND FITNESS FOR A PARTICULAR PURPOSE (AND THEIR EQUIVALENTS UNDER THE LAWS OF ANY JURISDICTION).

Diodes Incorporated and its subsidiaries reserve the right to make modifications, enhancements, improvements, corrections or other changes without further notice to this document and any product described herein. Diodes Incorporated does not assume any liability arising out of the application or use of this document or any product described herein; neither does Diodes Incorporated convey any license under its patent or trademark rights, nor the rights of others. Any Customer or user of this document or products described herein in such applications shall assume all risks of such use and will agree to hold Diodes Incorporated and all the companies whose products are represented on Diodes Incorporated website, harmless against all damages.

Diodes Incorporated does not warrant or accept any liability whatsoever in respect of any products purchased through unauthorized sales channel. Should Customers purchase or use Diodes Incorporated products for any unintended or unauthorized application, Customers shall indemnify and hold Diodes Incorporated and its representatives harmless against all claims, damages, expenses, and attorney fees arising out of, directly or indirectly, any claim of personal injury or death associated with such unintended or unauthorized application.

Products described herein may be covered by one or more United States, international or foreign patents pending. Product names and markings noted herein may also be covered by one or more United States, international or foreign trademarks.

This document is written in English but may be translated into multiple languages for reference. Only the English version of this document is the final and determinative format released by Diodes Incorporated.

LIFE SUPPORT

Diodes Incorporated products are specifically not authorized for use as critical components in life support devices or systems without the express written approval of the Chief Executive Officer of Diodes Incorporated. As used herein:

A. Life support devices or systems are devices or systems which:

1. are intended to implant into the body, or

2. support or sustain life and whose failure to perform when properly used in accordance with instructions for use provided in the labeling can be reasonably expected to result in significant injury to the user.

B. A critical component is any component in a life support device or system whose failure to perform can be reasonably expected to cause the failure of the life support device or to affect its safety or effectiveness.

Customers represent that they have all necessary expertise in the safety and regulatory ramifications of their life support devices or systems, and acknowledge and agree that they are solely responsible for all legal, regulatory and safety-related requirements concerning their products and any use of Diodes Incorporated products in such safety-critical, life support devices or systems, notwithstanding any devices- or systems-related information or support that may be provided by Diodes Incorporated. Further, Customers must fully indemnify Diodes Incorporated and its representatives against any damages arising out of the use of Diodes Incorporated products in such safety-critical, life support devices or systems.

Copyright © 2015, Diodes Incorporated

www.diodes.com

ENTEGRECİ

Bu belge www.entegreci.com üzerinden sunulmaktadır.

Elektronik komponent tedarikinde Entegreci

Entegreci, Eskişehir merkezli, Türkiye geneline satış yapan bir elektronik komponent mağazasıdır. Entegreler (IC), mikrodenetleyiciler, transistörler, diyotlar, pasif elemanlar, konnektörler, modüller ve geliştirme kartları tek adetten seri üretim adetlerine kadar satılır. Ürün sayfalarında güncel stok durumunu, fiyatı ve datasheet bağlantısını bulabilirsiniz.

Parça koduyla arama

Üretici parça numarasını yazın; stok ve fiyatı hemen görün.

www.entegreci.com

Ürün kategorileri

Entegreden kapasitöre tüm elektronik komponent kategorileri.

Kategorilere göz atın

Üreticiler

Aradığınız üreticinin ürünlerini tek sayfada inceleyin.

Üreticileri görün

Toplu alım ve teklif

Listede olmayan ya da yüksek adetli parçalar için teklif isteyin.

Teklif isteyin

www.entegreci.com | **destek@entegreci.com** | **0850 305 90 34**

Entegreci is an online electronic components store based in Türkiye. Search by manufacturer part number to see stock, prices and datasheets for integrated circuits, microcontrollers, transistors, passive components and connectors, or request a quote for parts that are not listed.

Bu sayfa Entegreci tarafından eklenmiştir. Belgenin önceki sayfaları asıl yayıncısına aittir ve içeriği değiştirilmemiştir; en güncel sürüm için belgenin yayıncısına başvurun.