30V P-CHANNEL ENHANCEMENT MODE MOSFET

Product Summary

BV_{DSS}	$R_{DS(ON)}$ Max	I_D Max T_C = +25°C
-30V	42mΩ @ V_{GS} = -10V	-19.9A
	65mΩ @ V_{GS} = -4.5V	-16A

Description

This new generation MOSFET is designed to minimize the on-state resistance ($R_{DS(ON)}$) yet maintain superior switching performance, making it ideal for high-efficiency power management applications.

Applications

- General purpose interfacing switches
- Power management functions

Features and Benefits

- Low $R_{DS(ON)}$ – Ensures On-State Losses Are Minimized
- Small Form Factor Thermally Efficient Package Enables Higher Density End Products
- Occupies just 33% of The Board Area Occupied by SO-8 Enabling Smaller End Product
- **ESD Protected Gate**
- **Totally Lead-Free & Fully RoHS Compliant (Notes 1 & 2)**
- **Halogen and Antimony Free. "Green" Device (Note 3)**
- **For automotive applications requiring specific change control (i.e. parts qualified to AEC-Q100/101/104/200, PPAP capable, and manufactured in IATF 16949 certified facilities), please contact us or your local Diodes representative. https://www.diodes.com/quality/product-definitions/**
- **An Automotive-Compliant Part is Available Under Separate Datasheet (DMP3045LFVWQ)**

Mechanical Data

- Package: PowerDI®3333-8
- Package Material: Molded Plastic, "Green" Molding Compound. UL Flammability Classification Rating 94V-0
- Moisture Sensitivity: Level 1 per J-STD-020
- Terminal Connections Indicator: See Diagram
- Terminals: Finish — Matte Tin Annealed over Copper Leadframe. Solderable per MIL-STD-202, Method 208 e3
- Weight: 0.072 grams (Approximate)

PowerDI3333-8 (SWP) (Type UX)



Top View

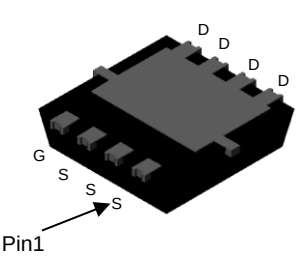

Bottom View

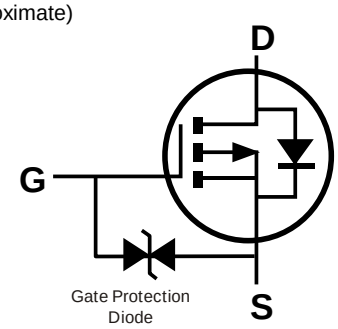

Equivalent Circuit

Ordering Information (Note 4)

Part Number	Package	Packing	
		Qty.	Carrier
DMP3045LFVW-7	PowerDI3333-8 (SWP) (Type UX)	2,000	Tape & Reel
DMP3045LFVW-13	PowerDI3333-8 (SWP) (Type UX)	3,000	Tape & Reel

Notes:
1. No purposely added lead. Fully EU Directive 2002/95/EC (RoHS), 2011/65/EU (RoHS 2) & 2015/863/EU (RoHS 3) compliant.
2. See https://www.diodes.com/quality/lead-free/ for more information about Diodes Incorporated's definitions of Halogen- and Antimony-free, "Green" and Lead-free.
3. Halogen- and Antimony-free "Green" products are defined as those which contain <900ppm bromine, <900ppm chlorine (<1500ppm total Br + Cl) and <1000ppm antimony compounds.
4. For packaging details, go to our website at https://www.diodes.com/design/support/packaging/diodes-packaging/.

Marking Information

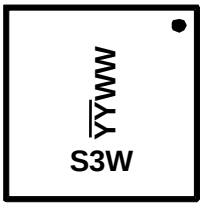

S3W = Product Type Marking Code
YYWW = Date Code Marking
YY = Last Two Digits of Year (ex: 22 = 2022)
WW = Week Code (01 to 53)

PowerDI is a registered trademark of Diodes Incorporated.

© 2022 Copyright Diodes Incorporated. All Rights Reserved.

Maximum Ratings (@ T_A = +25°C, unless otherwise specified.)

Characteristic			Symbol	Value	Unit
Drain-Source Voltage			V_{DSS}	-30	V
Gate-Source Voltage			V_{GSS}	±20	V
Continuous Drain Current (Note 6) V_{GS} = -10V	Steady State	T_A = +25°C T_A = +70°C	I_D	-5.7 -4.6	A
Continuous Drain Current (Note 7) V_{GS} = -10V	Steady State	T_C = +25°C T_C = +70°C	I_D	-19.9 -15.9	A
Maximum Continuous Body Diode Forward Current (Note 7)			I_S	-1.3	A
Pulsed Drain Current (10µs Pulse, Duty Cycle = 1%)			I_{DM}	-76	A
Pulsed Body Diode Forward Current (10µs Pulse, Duty Cycle = 1%)			I_{SM}	-76	A
Avalanche Current (Note 8) L = 1mH			I_{AS}	-7.8	A
Avalanche Energy (Note 8) L = 1mH			E_{AS}	30.8	mJ

Thermal Characteristics (@ T_A = +25°C, unless otherwise specified.)

Characteristic		Symbol	Value	Unit
Total Power Dissipation (Note 5)	T_A = +25°C	P_D	0.9	W
Thermal Resistance, Junction to Ambient (Note 5)	Steady State	$R_{\theta JA}$	135	°C/W
Total Power Dissipation (Note 6)	T_A = +25°C	P_D	2.1	W
Thermal Resistance, Junction to Ambient (Note 6)	Steady State	$R_{\theta JA}$	61	°C/W
Thermal Resistance, Junction to Case (Note 7)		$R_{\theta JC}$	5	°C/W
Operating and Storage Temperature Range		T_J, T_{STG}	-55 to +150	°C

Electrical Characteristics (@ T_A = +25°C, unless otherwise specified.)

Characteristic	Symbol	Min	Typ	Max	Unit	Test Condition
OFF CHARACTERISTICS (Note 9)						
Drain-Source Breakdown Voltage	BV_{DSS}	-30	—	—	V	V_{GS} = 0V, I_D = -250µA
Zero Gate Voltage Drain Current	I_{DSS}	—	—	-1	µA	V_{DS} = -24V, V_{GS} = 0V
Gate-Source Leakage	I_{GSS}	—	—	±10	µA	V_{GS} = ±20V, V_{DS} = 0V
ON CHARACTERISTICS (Note 9)						
Gate Threshold Voltage	$V_{GS(TH)}$	-1.0	—	-2.1	V	V_{DS} = V_{GS}, I_D = -250µA
Static Drain-Source On-Resistance	$R_{DS(ON)}$	—	25	42	mΩ	V_{GS} = -10V, I_D = -4.9A
		—	43	65		V_{GS} = -4.5V, I_D = -3.7A
Diode Forward Voltage	V_{SD}	—	-0.7	-1.2	V	V_{GS} = 0V, I_S = -1A
DYNAMIC CHARACTERISTICS (Note 10)						
Input Capacitance	C_{iss}	—	782	—	pF	V_{DS} = -15V, V_{GS} = 0V, f = 1.0MHz
Output Capacitance	C_{oss}	—	110	—	pF	
Reverse Transfer Capacitance	C_{rss}	—	74	—	pF	
Gate Resistance	R_g	—	10.4	—	Ω	V_{DS} = 0V, V_{GS} = 0V, f = 1.0MHz
Total Gate Charge (V_{GS} = -4.5V)	Q_g	—	6.6	—	nC	V_{DS} = -15V, I_D = -4.9A
Total Gate Charge (V_{GS} = -10V)	Q_g	—	13.6	—	nC	
Gate-Source Charge	Q_{gs}	—	2.1	—	nC	
Gate-Drain Charge	Q_{gd}	—	2.7	—	nC	
Turn-On Delay Time	$t_{D(ON)}$	—	4.1	—	ns	V_{DD} = -15V, V_{GS} = -10V, I_D = -4.9A, R_G = 6Ω
Turn-On Rise Time	t_R	—	6.1	—	ns	
Turn-Off Delay Time	$t_{D(OFF)}$	—	24.6	—	ns	
Turn-Off Fall Time	t_F	—	13.1	—	ns	
Reverse Recovery Time	t_{RR}	—	12.7	—	ns	I_S = -11.5A, dI/dt = 100A/µs
Reverse Recovery Charge	Q_{RR}	—	4.8	—	nC	

Notes:
5. Device mounted on FR-4 PC board, with minimum recommended pad layout, single sided.
6. Device mounted on FR-4 substrate PC board, 2oz copper, with thermal bias to bottom layer 1-inch square copper plate.
7. Thermal resistance from junction to soldering point (on the exposed drain pad).
8. I_{AS} and E_{AS} ratings are based on low frequency and duty cycles to keep T_J = +25°C.
9. Short duration pulse test used to minimize self-heating effect.
10. Guaranteed by design. Not subject to product testing.

© 2022 Copyright Diodes Incorporated. All Rights Reserved.

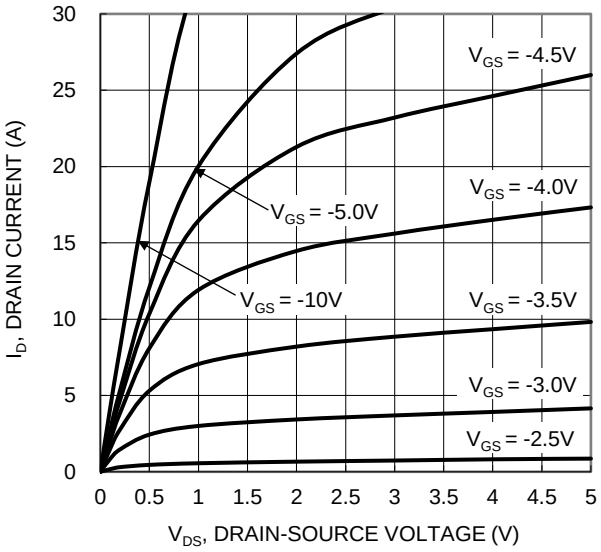

Figure 1. Typical Output Characteristic

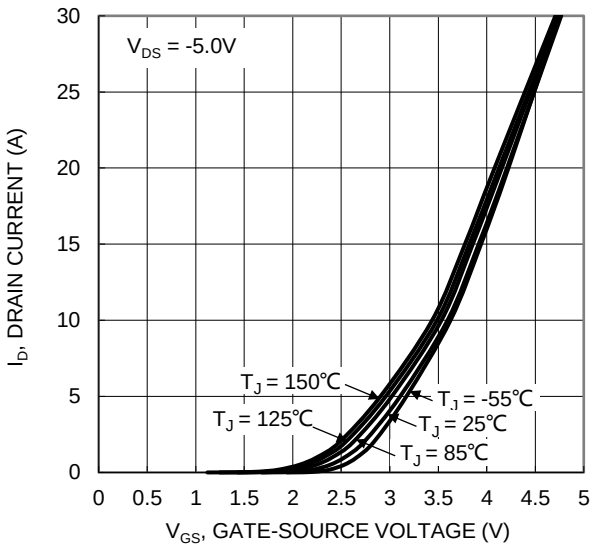

Figure 2. Typical Transfer Characteristic

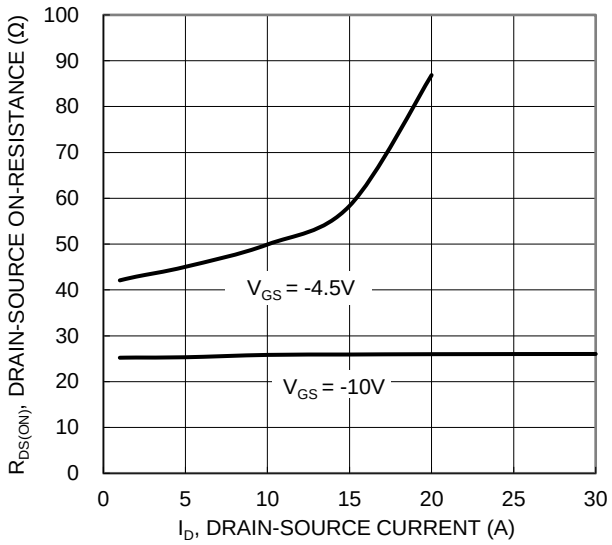

Figure 3. Typical On-Resistance vs. Drain Current and Gate Voltage

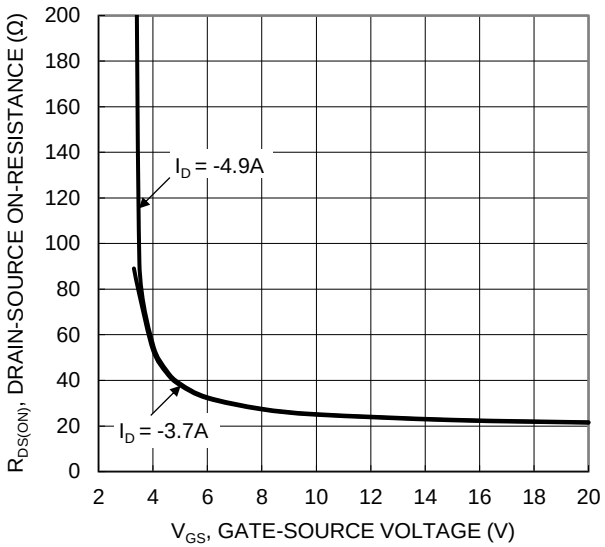

Figure 4. Typical Transfer Characteristic

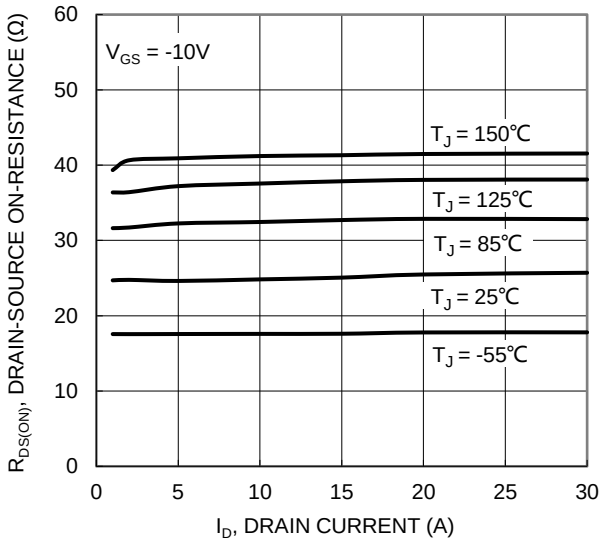

Figure 5. Typical On-Resistance vs. Drain Current and Temperature

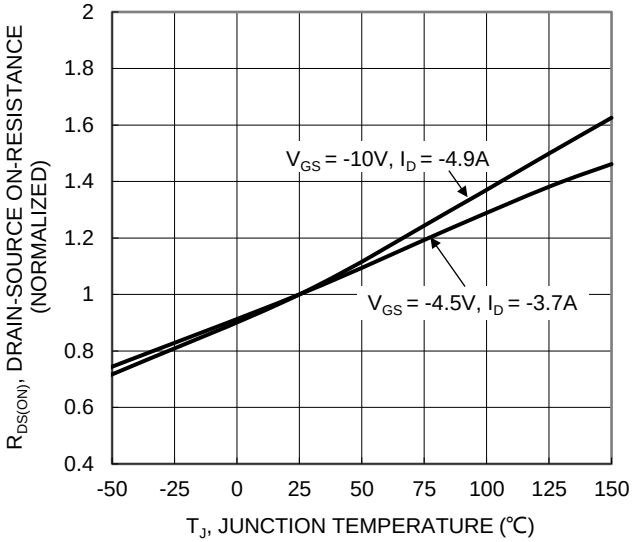

Figure 6. On-Resistance Variation with Temperature

© 2022 Copyright Diodes Incorporated. All Rights Reserved.

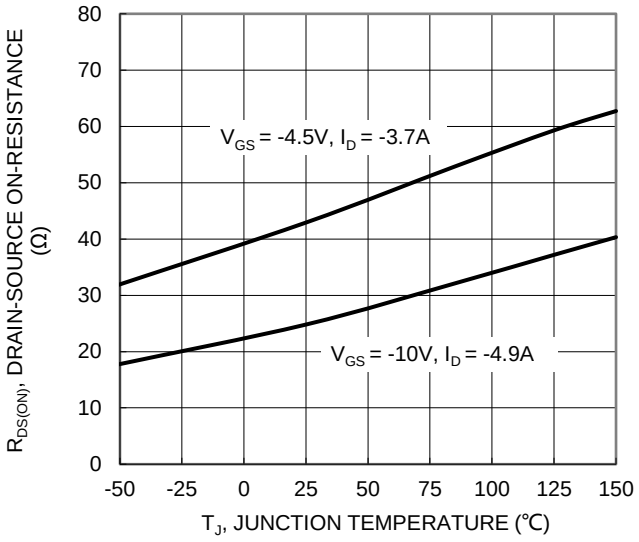

Figure 7. On-Resistance Variation with Temperature

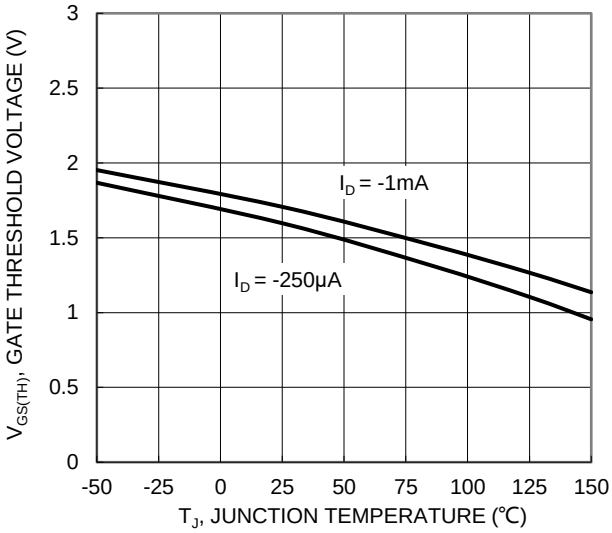

Figure 8. Gate Threshold Variation vs. Temperature

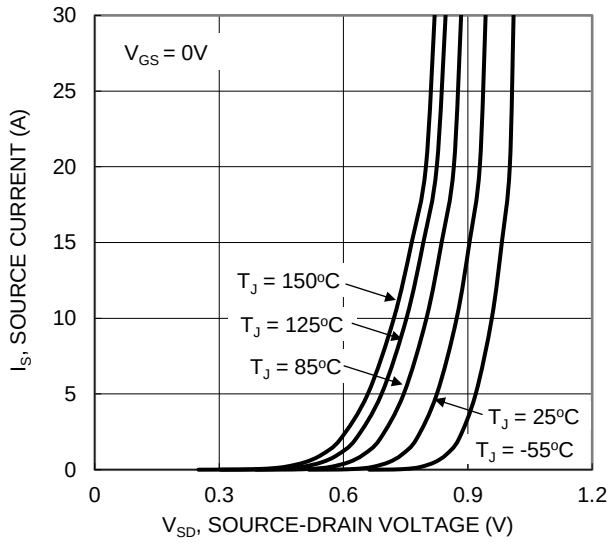

Figure 9. Diode Forward Voltage vs. Current

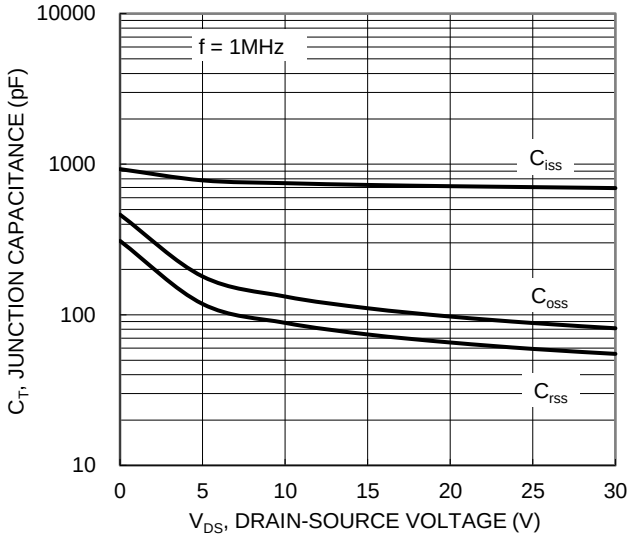

Figure 10. Typical Junction Capacitance

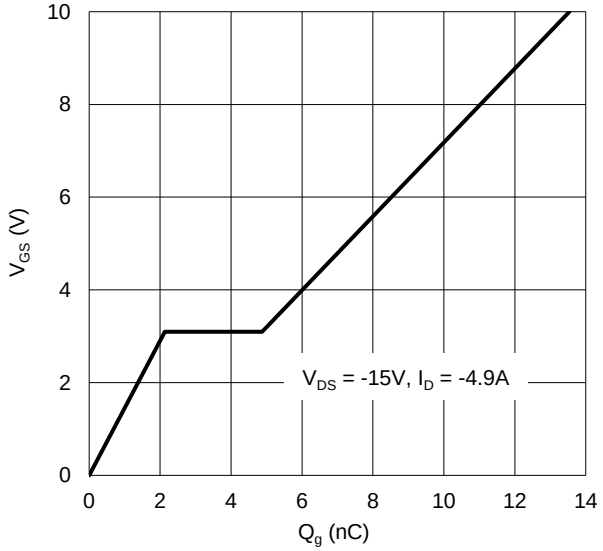

Figure 11. Gate Charge

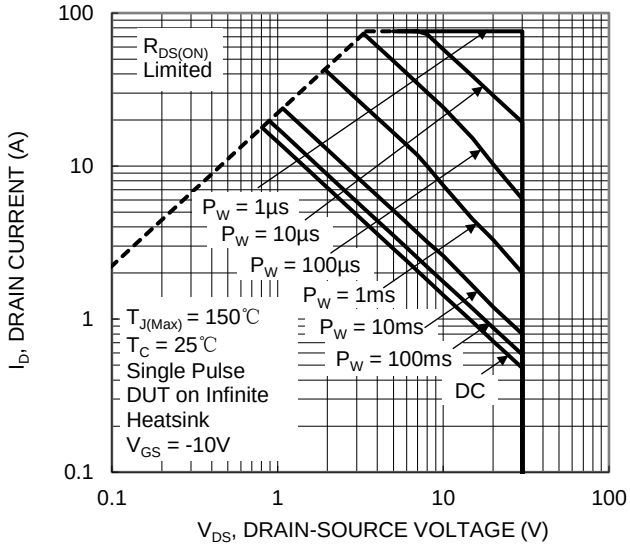

Figure 12. SOA, Safe Operation Area

© 2022 Copyright Diodes Incorporated. All Rights Reserved.

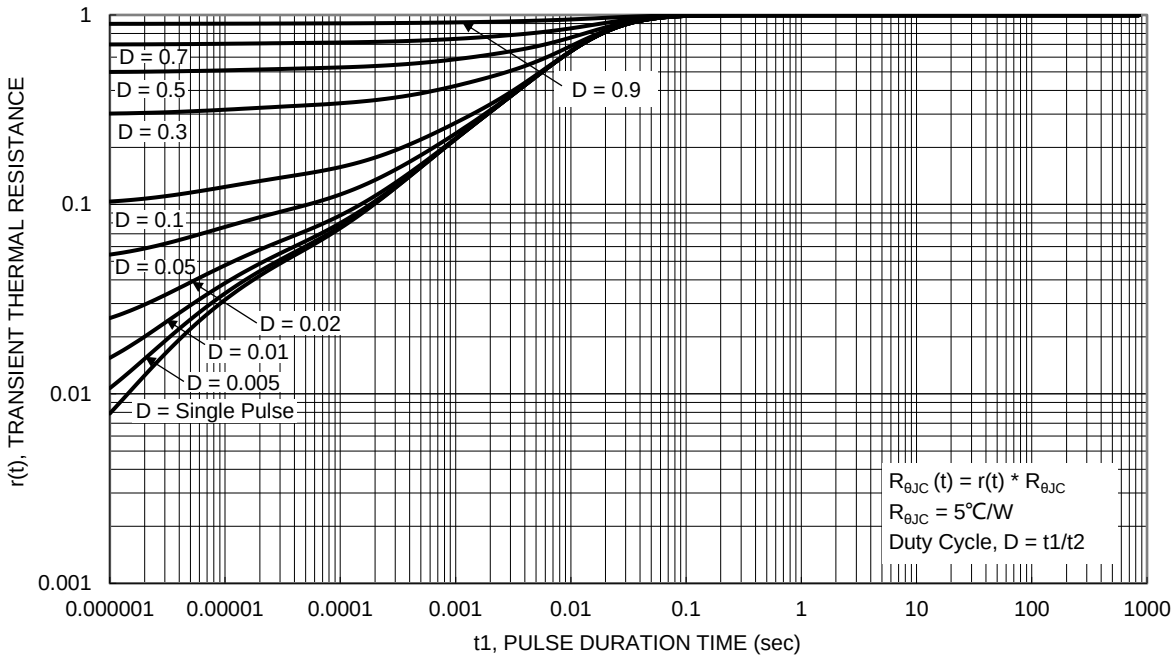

Figure 13. Transient Thermal Resistance

© 2022 Copyright Diodes Incorporated. All Rights Reserved.

Package Outline Dimensions

Please see http://www.diodes.com/package-outlines.html for the latest version.

PowerDI3333-8 (SWP) (Type UX)

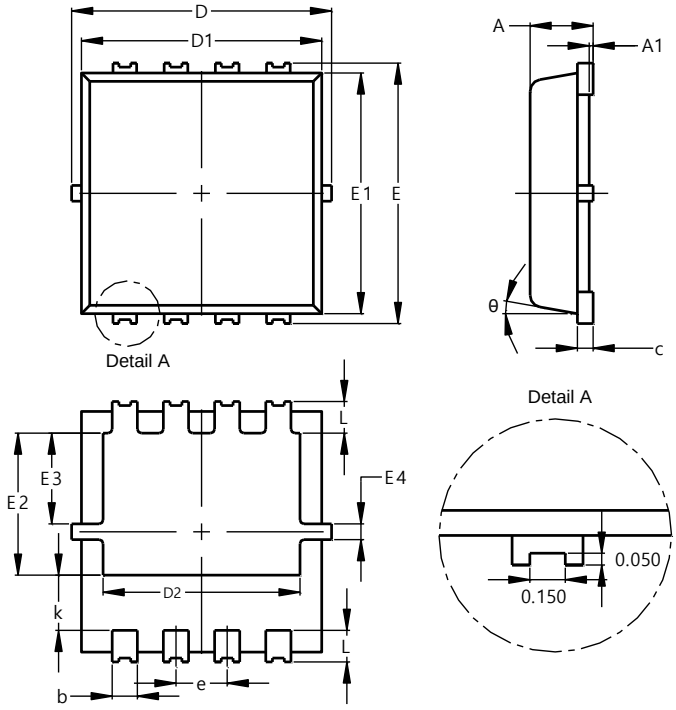

PowerDI3333-8 (SWP) (Type UX)			
Dim	**Min**	**Max**	**Typ**
A	0.75	0.85	0.80
A1	0.00	0.05	--
b	0.25	0.40	0.32
c	0.10	0.25	0.15
D	3.20	3.40	3.30
D1	2.95	3.15	3.05
D2	2.30	2.70	2.50
E	3.20	3.40	3.30
E1	2.95	3.15	3.05
E2	1.60	2.00	1.80
E3	0.95	1.35	1.15
E4	0.10	0.30	0.20
e	–	–	0.65
k	0.50	0.90	0.70
L	0.30	0.50	0.40
θ	0°	12°	10°
All Dimensions in mm			

Suggested Pad Layout

Please see http://www.diodes.com/package-outlines.html for the latest version.

PowerDI3333-8 (SWP) (Type UX)

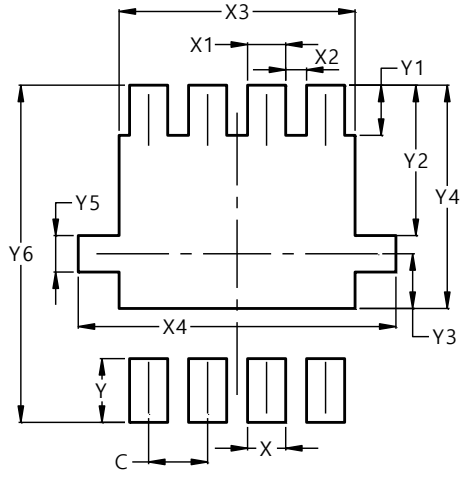

Dimensions	Value (in mm)
C	0.650
X	0.420
X1	0.420
X2	0.230
X3	2.600
X4	3.500
Y	0.700
Y1	0.550
Y2	1.650
Y3	0.600
Y4	2.450
Y5	0.400
Y6	3.700

© 2022 Copyright Diodes Incorporated. All Rights Reserved.

IMPORTANT NOTICE

1. DIODES INCORPORATED (Diodes) AND ITS SUBSIDIARIES MAKE NO WARRANTY OF ANY KIND, EXPRESS OR IMPLIED, WITH REGARDS TO ANY INFORMATION CONTAINED IN THIS DOCUMENT, INCLUDING, BUT NOT LIMITED TO, THE IMPLIED WARRANTIES OF MERCHANTABILITY, FITNESS FOR A PARTICULAR PURPOSE OR NON-INFRINGEMENT OF THIRD PARTY INTELLECTUAL PROPERTY RIGHTS (AND THEIR EQUIVALENTS UNDER THE LAWS OF ANY JURISDICTION).

2. The Information contained herein is for informational purpose only and is provided only to illustrate the operation of Diodes' products described herein and application examples. Diodes does not assume any liability arising out of the application or use of this document or any product described herein. This document is intended for skilled and technically trained engineering customers and users who design with Diodes' products. Diodes' products may be used to facilitate safety-related applications; however, in all instances customers and users are responsible for (a) selecting the appropriate Diodes products for their applications, (b) evaluating the suitability of Diodes' products for their intended applications, (c) ensuring their applications, which incorporate Diodes' products, comply the applicable legal and regulatory requirements as well as safety and functional-safety related standards, and (d) ensuring they design with appropriate safeguards (including testing, validation, quality control techniques, redundancy, malfunction prevention, and appropriate treatment for aging degradation) to minimize the risks associated with their applications.

3. Diodes assumes no liability for any application-related information, support, assistance or feedback that may be provided by Diodes from time to time. Any customer or user of this document or products described herein will assume all risks and liabilities associated with such use, and will hold Diodes and all companies whose products are represented herein or on Diodes' websites, harmless against all damages and liabilities.

4. Products described herein may be covered by one or more United States, international or foreign patents and pending patent applications. Product names and markings noted herein may also be covered by one or more United States, international or foreign trademarks and trademark applications. Diodes does not convey any license under any of its intellectual property rights or the rights of any third parties (including third parties whose products and services may be described in this document or on Diodes' website) under this document.

5. Diodes' products are provided subject to Diodes' Standard Terms and Conditions of Sale (https://www.diodes.com/about/company/terms-and-conditions/terms-and-conditions-of-sales/) or other applicable terms. This document does not alter or expand the applicable warranties provided by Diodes. Diodes does not warrant or accept any liability whatsoever in respect of any products purchased through unauthorized sales channel.

6. Diodes' products and technology may not be used for or incorporated into any products or systems whose manufacture, use or sale is prohibited under any applicable laws and regulations. Should customers or users use Diodes' products in contravention of any applicable laws or regulations, or for any unintended or unauthorized application, customers and users will (a) be solely responsible for any damages, losses or penalties arising in connection therewith or as a result thereof, and (b) indemnify and hold Diodes and its representatives and agents harmless against any and all claims, damages, expenses, and attorney fees arising out of, directly or indirectly, any claim relating to any noncompliance with the applicable laws and regulations, as well as any unintended or unauthorized application.

7. While efforts have been made to ensure the information contained in this document is accurate, complete and current, it may contain technical inaccuracies, omissions and typographical errors. Diodes does not warrant that information contained in this document is error-free and Diodes is under no obligation to update or otherwise correct this information. Notwithstanding the foregoing, Diodes reserves the right to make modifications, enhancements, improvements, corrections or other changes without further notice to this document and any product described herein. This document is written in English but may be translated into multiple languages for reference. Only the English version of this document is the final and determinative format released by Diodes.

8. Any unauthorized copying, modification, distribution, transmission, display or other use of this document (or any portion hereof) is prohibited. Diodes assumes no responsibility for any losses incurred by the customers or users or any third parties arising from any such unauthorized use.

9. This Notice may be periodically updated with the most recent version available at https://www.diodes.com/about/company/terms-and-conditions/important-notice

DIODES is a trademark of Diodes Incorporated in the United States and other countries.
The Diodes logo is a registered trademark of Diodes Incorporated in the United States and other countries.
© 2022 Diodes Incorporated. All Rights Reserved.

www.diodes.com

© 2022 Copyright Diodes Incorporated. All Rights Reserved.

ENTEGRECİ

Bu belge www.entegreci.com üzerinden sunulmaktadır.

Elektronik komponent tedarikinde Entegreci

Entegreci, Eskişehir merkezli, Türkiye geneline satış yapan bir elektronik komponent mağazasıdır. Entegreler (IC), mikrodenetleyiciler, transistörler, diyotlar, pasif elemanlar, konnektörler, modüller ve geliştirme kartları tek adetten seri üretim adetlerine kadar satılır. Ürün sayfalarında güncel stok durumunu, fiyatı ve datasheet bağlantısını bulabilirsiniz.

Parça koduyla arama

Üretici parça numarasını yazın; stok ve fiyatı hemen görün.

www.entegreci.com

Ürün kategorileri

Entegreden kapasitöre tüm elektronik komponent kategorileri.

Kategorilere göz atın

Üreticiler

Aradığınız üreticinin ürünlerini tek sayfada inceleyin.

Üreticileri görün

Toplu alım ve teklif

Listede olmayan ya da yüksek adetli parçalar için teklif isteyin.

Teklif isteyin

www.entegreci.com | **destek@entegreci.com** | **0850 305 90 34**

Entegreci is an online electronic components store based in Türkiye. Search by manufacturer part number to see stock, prices and datasheets for integrated circuits, microcontrollers, transistors, passive components and connectors, or request a quote for parts that are not listed.

Bu sayfa Entegreci tarafından eklenmiştir. Belgenin önceki sayfaları asıl yayıncısına aittir ve içeriği değiştirilmemiştir; en güncel sürüm için belgenin yayıncısına başvurun.