BLM10D3438-70ABG

LDMOS 3-stage integrated Doherty MMIC

AMPLEON

Rev. 1 — 18 September 2020 Product data sheet

1. Product profile

1.1 General description

The BLM10D3438-70ABG is a 3-stage fully integrated Doherty MMIC solution using Ampleon's state of the art GEN10 LDMOS technology. The carrier and peaking device, input splitter and output combiner are integrated in a single package. This multiband device is perfectly suited as general purpose driver or mMIMO final in the frequency range from 3400 MHz to 3800 MHz. Available in gull wing.

Table 1. Performance

Typical RF performance at T_{case} = 25 °C; I_{Dq} = 110 mA (carrier); $V_{GSq(peaking)} = V_{GSq(carrier)} - 0.5$ V.

Test signal	f	V_{DS}	$P_{L(M)}$	G_p	η_D	$ACPR_{20M}$
	(MHz)	(V)	(dBm)	(dB)	(%)	(dBc)
1-carrier LTE 20 MHz	3600	28	40	31.8	37.8	–24

1.2 Features and benefits

- Integrated input splitter
- Integrated output combiner
- High efficiency
- Designed for broadband operation (frequency 3400 MHz to 3800 MHz)
- Independent control of carrier and peaking bias
- Integrated ESD protection
- Source impedance 50 Ω; high power gain
- For RoHS compliance see the product details on the Ampleon website

1.3 Applications

- RF power MMIC for multi-carrier and multi-standard GSM, W-CDMA and LTE base stations in the 3400 MHz to 3800 MHz frequency range

2. Pinning information

2.1 Pinning

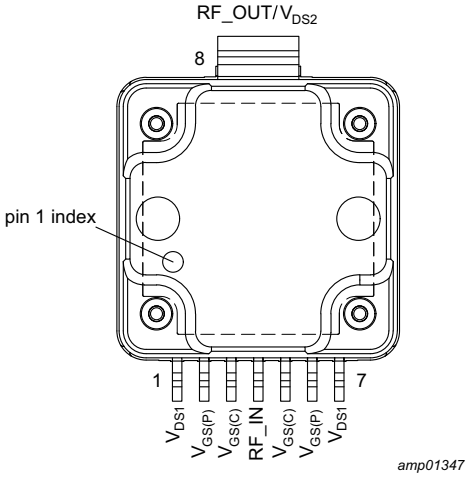

Transparent top view

The exposed backside of the package is the ground terminal of the device.

Fig 1. Pin configuration

2.2 Pin description

Table 2. Pin description

Symbol	Pin	Description
V_{DS1}	1	drain-source voltage of driver stages
$V_{GS(P)}$	2	gate-source voltage of peaking P
$V_{GS(C)}$	3	gate-source voltage of carrier C
RF_IN	4	RF input
$V_{GS(C)}$	5	gate-source voltage of carrier C
$V_{GS(P)}$	6	gate-source voltage of peaking P
V_{DS1}	7	drain-source voltage of driver stages
RF_OUT/V_{DS2}	8	RF output / drain-source voltage of final stages
GND	flange	RF ground

3. Ordering information

Table 3. Ordering information

Type number	Package		
	Name	Description	Version
BLM10D3438-70ABG		plastic, heatsink small outline package; 8 leads	OMP-400-8G-1

All information provided in this document is subject to legal disclaimers.
© Ampleon Netherlands B.V. 2020. All rights reserved.

4. Block diagram

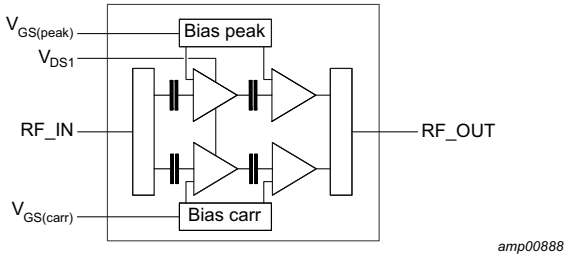

Fig 2. Block diagram

5. Limiting values

Table 4. Limiting values

In accordance with the Absolute Maximum Rating System (IEC 60134).

Symbol	Parameter	Conditions	Min	Max	Unit
V_{DS}	drain-source voltage		-	65	V
V_{GS}	gate-source voltage		–6	+9	V
T_{stg}	storage temperature		–65	+150	°C
T_j	junction temperature	[1]	-	200	°C
T_{case}	case temperature		-	150	°C

[1] Continuous use at maximum temperature will affect the reliability. For details refer to the online MTF calculator.

6. Thermal characteristics

Table 5. Thermal characteristics

Measured for total device.

Symbol	Parameter	Conditions	Value	Unit
$R_{th(j-c)}$	thermal resistance from junction to case	T_{case} = 90 °C; P_L = 6.3 W [1]	1.88	K/W
		T_{case} = 90 °C; P_L = 10 W [1]	1.51	K/W

[1] When operated with a 1-carrier W-CDMA with PAR = 9.9 dB.

All information provided in this document is subject to legal disclaimers.
© Ampleon Netherlands B.V. 2020. All rights reserved.

7. Characteristics

Table 6. DC characteristics

T_{case} = 25 °C.

Symbol	Parameter	Conditions	Min	Typ	Max	Unit
Carrier						
V_{GSq}	gate-source quiescent voltage	V_{DS} = 28 V; I_D = 110 mA	1.6	2.2	2.7	V
I_{GSS}	gate leakage current	V_{GS} = 1 V; V_{DS} = 0 V	-	-	140	nA
Peaking						
I_{GSS}	gate leakage current	V_{GS} = 1 V; V_{DS} = 0 V	-	-	140	nA
Final stages						
I_{DSS}	drain leakage current	V_{GS} = 0 V; V_{DS} = 28 V	-	-	1.4	μA
Driver stages						
I_{DSS}	drain leakage current	V_{GS} = 0 V; V_{DS} = 28 V	-	-	1.4	μA

Table 7. RF Characteristics

Typical RF performance at T_{case} = 25 °C; V_{DS} = 28 V; I_{Dq} = 110 mA (carrier); $V_{GSq(peaking)} = V_{GSq(carrier)} - 0.5$ V; $P_{L(AV)}$ = 10 W; unless otherwise specified measured in an Ampleon production circuit.

Symbol	Parameter	Conditions	Min	Typ	Max	Unit
Test signal: pulsed CW [1]						
G_p	power gain	f = 3600 MHz	29.5	31.5	33.5	dB
η_D	drain efficiency	P_L = 10 W (40 dBm)	33	42	-	%
		$P_L = P_{L(3dB)}$	34	41	-	%
RL_{in}	input return loss		-	−15	−10	dB
$P_{L(3dB)}$	output power at 3 dB gain compression		47.4	48.2	-	dBm

[1] Pulsed CW power sweep measurement (δ = 10 %, t_p = 100 μs)

8. Application information

Table 8. Typical performance

T_{case} = 25 °C; V_{DS} = 28 V; I_{Dq} = 110 mA (driver and final stages); test signal: 1-carrier LTE 20 MHz, PAR 7.6 dB at 0.01 % probability CCDF; measured in an Ampleon 3400 MHz to 3800 MHz frequency band asymmetrical integrated Doherty application circuit.

Symbol	Parameter	Conditions	Min	Typ	Max	Unit
$P_{L(3dB)}$	output power at 3 dB gain compression	f = 3600 MHz [1]	-	48.6	-	dBm
$\varphi_{s21}/\varphi_{s21(norm)}$	normalized phase response	at 3 dB compression point; f = 3600 MHz [2]	-	−55.4	-	°
η_D	drain efficiency	8.6 dB OBO ($P_{L(AV)}$ = 40 dBm); f = 3600 MHz	-	37.3	-	%
G_p	power gain	$P_{L(AV)}$ = 40 dBm; f = 3600 MHz	-	31.8	-	dB
B_{video}	video bandwidth	$P_{L(AV)}$ = 40 dBm, set to obtain IMD3 = −40 dBc; 2-tone CW; f = 3600 MHz	-	>600	-	MHz
G_{flat}	gain flatness	$P_{L(AV)}$ = 40 dBm; f = 3400 MHz to 3800 MHz	-	0.5	-	dB

All information provided in this document is subject to legal disclaimers.
© Ampleon Netherlands B.V. 2020. All rights reserved.

Table 8. Typical performance *…continued*

T_{case} = 25 °C; V_{DS} = 28 V; I_{Dq} = 110 mA (driver and final stages); test signal: 1-carrier LTE 20 MHz, PAR 7.6 dB at 0.01 % probability CCDF; measured in an Ampleon 3400 MHz to 3800 MHz frequency band asymmetrical integrated Doherty application circuit.

Symbol	Parameter	Conditions	Min	Typ	Max	Unit
$ACPR_{20M}$	adjacent channel power ratio (20 MHz)	$P_{L(AV)}$ = 40 dBm; f = 3600 MHz	-	−24.4	-	dBc
$\Delta G/\Delta T$	gain variation with temperature	f = 3600 MHz [3]	-	0.06	-	dB/°C
K	Rollett stability factor	T_{case} = −40 °C; f = 0.2 GHz to 6 GHz [3]	-	>1.5	-	

[1] Pulsed CW power sweep measurement (δ = 10 %, t_p = 100 µs).

[2] 25 ms CW power sweep measurement.

[3] S-parameters measured with broadband demo board.

All information provided in this document is subject to legal disclaimers.
© Ampleon Netherlands B.V. 2020. All rights reserved.

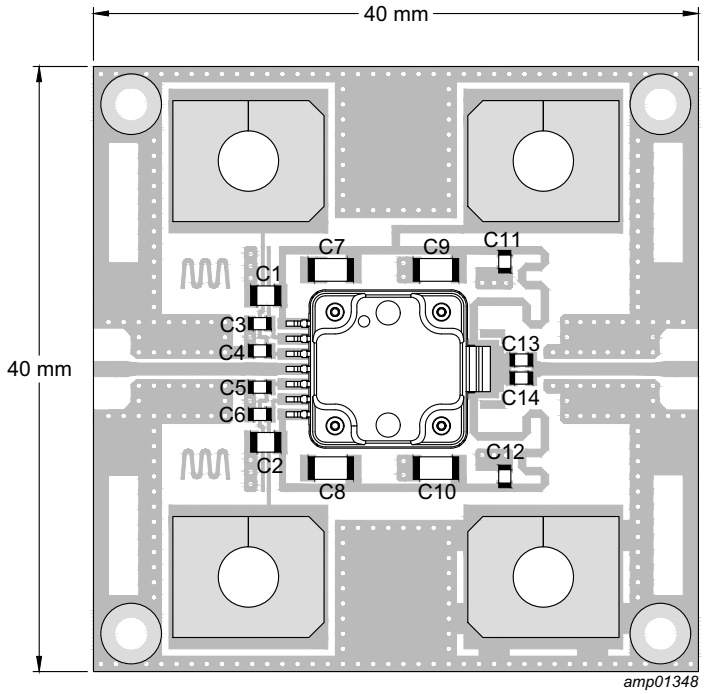

Printed-Circuit Board (PCB): Rogers 4350; thickness = 0.508 mm.

Fig 3. Component layout

Table 9. Demo test circuit list of components

See Figure 3 for component layout.

Component	Description	Value	Remarks
C1, C2	multilayer ceramic chip capacitor	4.7 μF, 35 V	TDK
C3, C4, C5, C6	multilayer ceramic chip capacitor	1 μF, 6.3 V	Murata
C7, C8, C9, C10	multilayer ceramic chip capacitor	10 μF, 50 V	Murata
C11, C12	multilayer ceramic chip capacitor	3 pF	Murata
C13, C14	multilayer ceramic chip capacitor	4.7 pF	Murata

All information provided in this document is subject to legal disclaimers.
© Ampleon Netherlands B.V. 2020. All rights reserved.

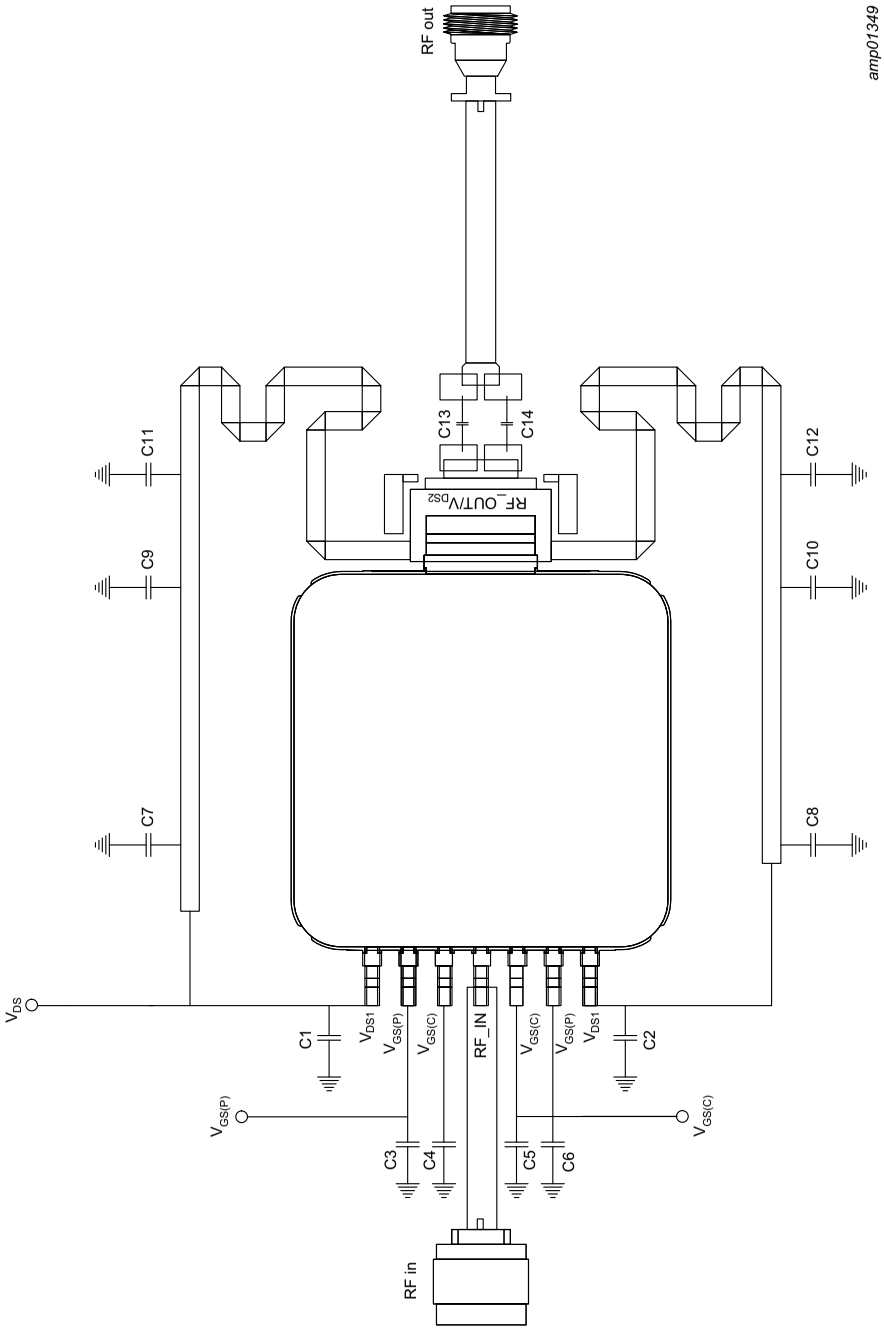

Fig 4. Electrical schematic

All information provided in this document is subject to legal disclaimers.
© Ampleon Netherlands B.V. 2020. All rights reserved.

8.1 Ruggedness in a Doherty operation

The BLM10D3438-70ABG is capable of withstanding a load mismatch corresponding to VSWR = 10 : 1 through all phases under the following conditions: V_{DS} = 32 V; I_{Dq} = 110 mA (carrier); $V_{GSq(peaking)} = V_{GSq(carrier)} - 0.5$ V; P_i corresponding to $P_{L(3dB)} - 5$ dB under Z_S = 50 Ω load; f = 3800 MHz (1-carrier W-CDMA signal with PAR = 9.9 dB); T_{case} = 25 °C unless otherwise specified.

8.2 Impedance information

Table 10. Typical impedance for optimum Doherty operation

Measured load-pull data per section; test signal: pulsed CW; T_{case} = 25 °C; V_{DS} = 28 V; I_{Dq} = 110 mA (carrier); $V_{GSq(peaking)} = V_{GSq(carrier)} - 0.5$ V; t_p = 100 µs; δ = 10 %. Typical values unless otherwise specified.

	tuned for optimum Doherty operation				
f	Z_L	$G_{p(max)}$	$P_{L(3dB)}$	η_{add} [1]	η_{add} [2]
(MHz)	(Ω)	(dB)	(dBm)	(%)	(%)
3400	19.51 – j22.94	32.4	48.48	43.3	44.0
3500	19.86 – j19.85	32.0	48.59	44.1	45.0
3600	17.03 – j17.98	32.1	48.65	44.9	45.4
3700	15.13 – j18.50	32.2	48.67	45.5	45.1
3800	14.85 – j20.56	32.8	48.68	46.4	44.2

[1] At 3 dB gain compression point.

[2] At P_L = 40 dBm.

All information provided in this document is subject to legal disclaimers.
© Ampleon Netherlands B.V. 2020. All rights reserved.

8.3 Graphs

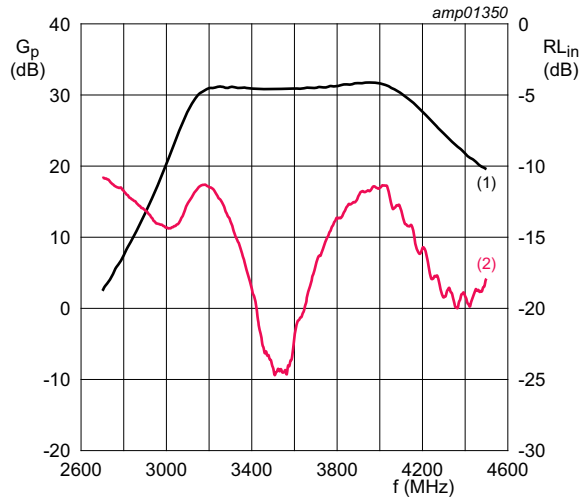

T_{case} = 25 °C; V_{DS} = 28 V;
I_{Dq1} + I_{Dq2} = 110 mA (carrier and peaking stages);
V_{GS} = 2.11 V (carrier stage);
V_{GS} = 1.61 V (peaking stage).
Test signal: CW.

(1) magnitude of G_p

(2) magnitude of RL_{in}

Fig 5. Wideband power gain and input return loss as function of frequency; typical values

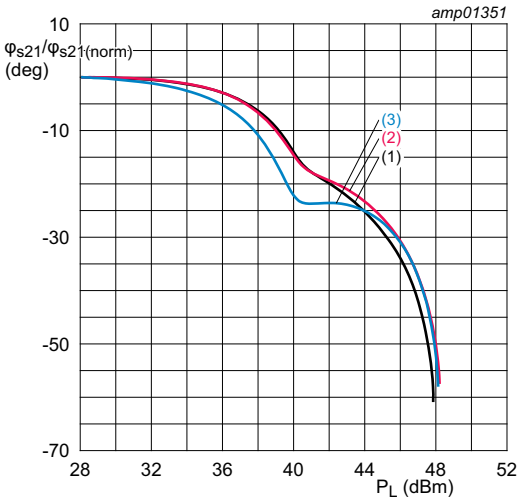

T_{case} = 25 °C; V_{DS} = 28 V;
I_{Dq1} + I_{Dq2} = 110 mA (carrier and peaking stages);
V_{GS} = 2.11 V (carrier stage);
V_{GS} = 1.61 V (peaking stage).
Test signal: 25 ms CW power sweep.

(1) f = 3400 MHz

(2) f = 3600 MHz

(3) f = 3800 MHz

Fig 6. Normalized phase response as a function of output power; typical values

All information provided in this document is subject to legal disclaimers.
© Ampleon Netherlands B.V. 2020. All rights reserved.

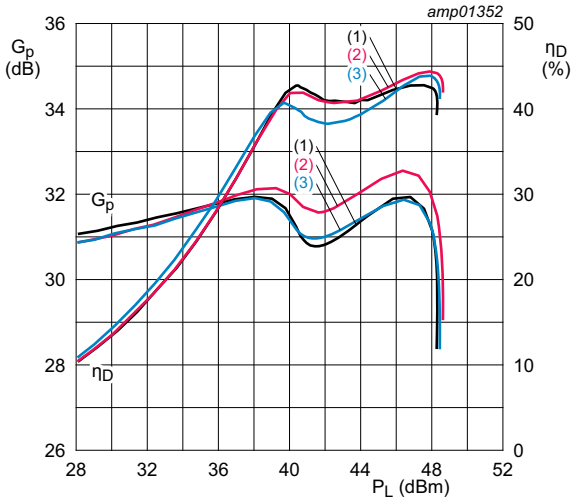

T_{case} = 25 °C; V_{DS} = 28 V; I_{Dq1} + I_{Dq2} = 110 mA (carrier and peaking stages);
V_{GS} = 2.11 V (carrier stage); V_{GS} = 1.61 V (peaking stage).
Test signal: pulsed CW power sweep (δ = 10 %; t_p = 100 μs).

(1) f = 3400 MHz

(2) f = 3600 MHz

(3) f = 3800 MHz

Fig 7. Power gain and drain efficiency as function of output power; typical values

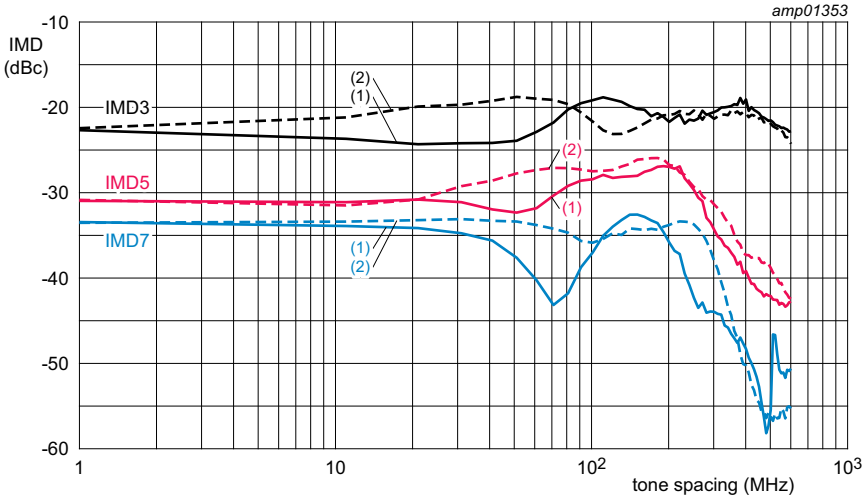

T_{case} = 25 °C; V_{DS} = 28 V; I_{Dq1} + I_{Dq2} = 110 mA (carrier and peaking stages);
V_{GS} = 2.11 V (carrier stage); V_{GS} = 1.61 V (peaking stage).
Test signal: 2-tone CW; f_c = 3600 MHz.

(1) IMD low

(2) IMD high

Fig 8. Intermodulation distortion as a function of tone spacing; typical values

All information provided in this document is subject to legal disclaimers.
© Ampleon Netherlands B.V. 2020. All rights reserved.

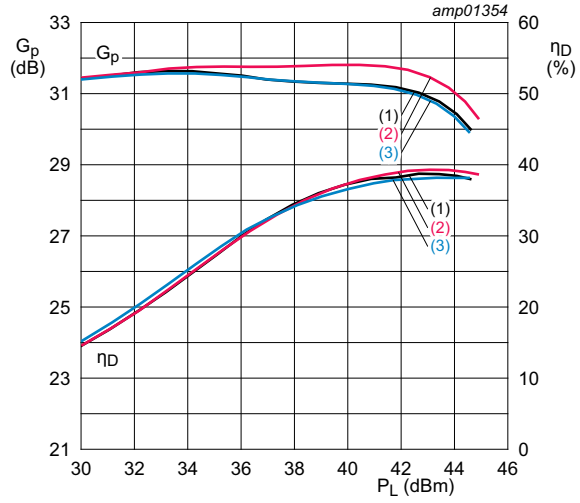

T_{case} = 25 °C; V_{DS} = 28 V;
$I_{Dq1} + I_{Dq2}$ = 110 mA (carrier and peaking stages);
V_{GS} = 2.11 V (carrier stage);
V_{GS} = 1.61 V (peaking stage).
Test signal: 1-carrier LTE; PAR = 7.6 dB at 0.01 % probability CCDF.

(1) f = 3400 MHz

(2) f = 3600 MHz

(3) f = 3800 MHz

Fig 9. Power gain and drain efficiency as function of output power; typical values

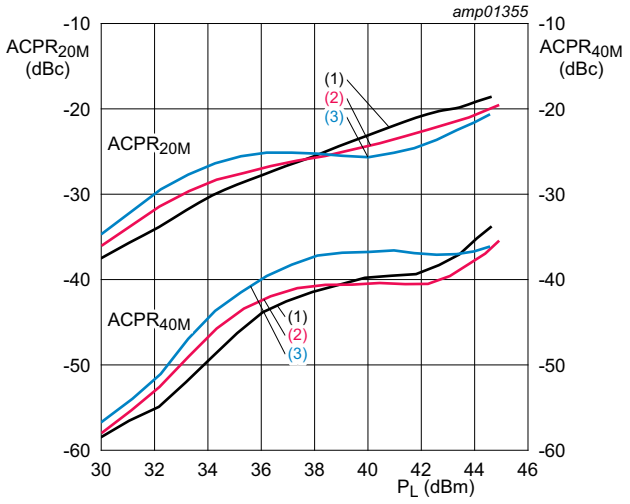

T_{case} = 25 °C; V_{DS} = 28 V;
$I_{Dq1} + I_{Dq2}$ = 110 mA (carrier and peaking stages);
V_{GS} = 2.11 V (carrier stage);
V_{GS} = 1.61 V (peaking stage).
Test signal: 1-carrier LTE; PAR = 7.6 dB at 0.01 % probability CCDF.

(1) f = 3400 MHz

(2) f = 3600 MHz

(3) f = 3800 MHz

Fig 10. Adjacent channel power ratio as a function of output power; typical values

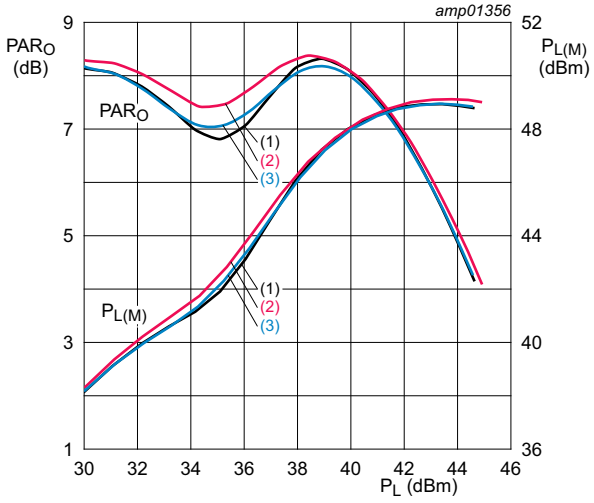

T_{case} = 25 °C; V_{DS} = 28 V; $I_{Dq1} + I_{Dq2}$ = 110 mA (carrier and peaking stages);
V_{GS} = 2.11 V (carrier stage); V_{GS} = 1.61 V (peaking stage).
Test signal: 1-carrier LTE; PAR = 7.6 dB at 0.01 % probability CCDF.

(1) f = 3400 MHz

(2) f = 3600 MHz

(3) f = 3800 MHz

Fig 11. Output peak-to-average ratio and peak output power as function of output power; typical values

All information provided in this document is subject to legal disclaimers.

© Ampleon Netherlands B.V. 2020. All rights reserved.

9. Package outline

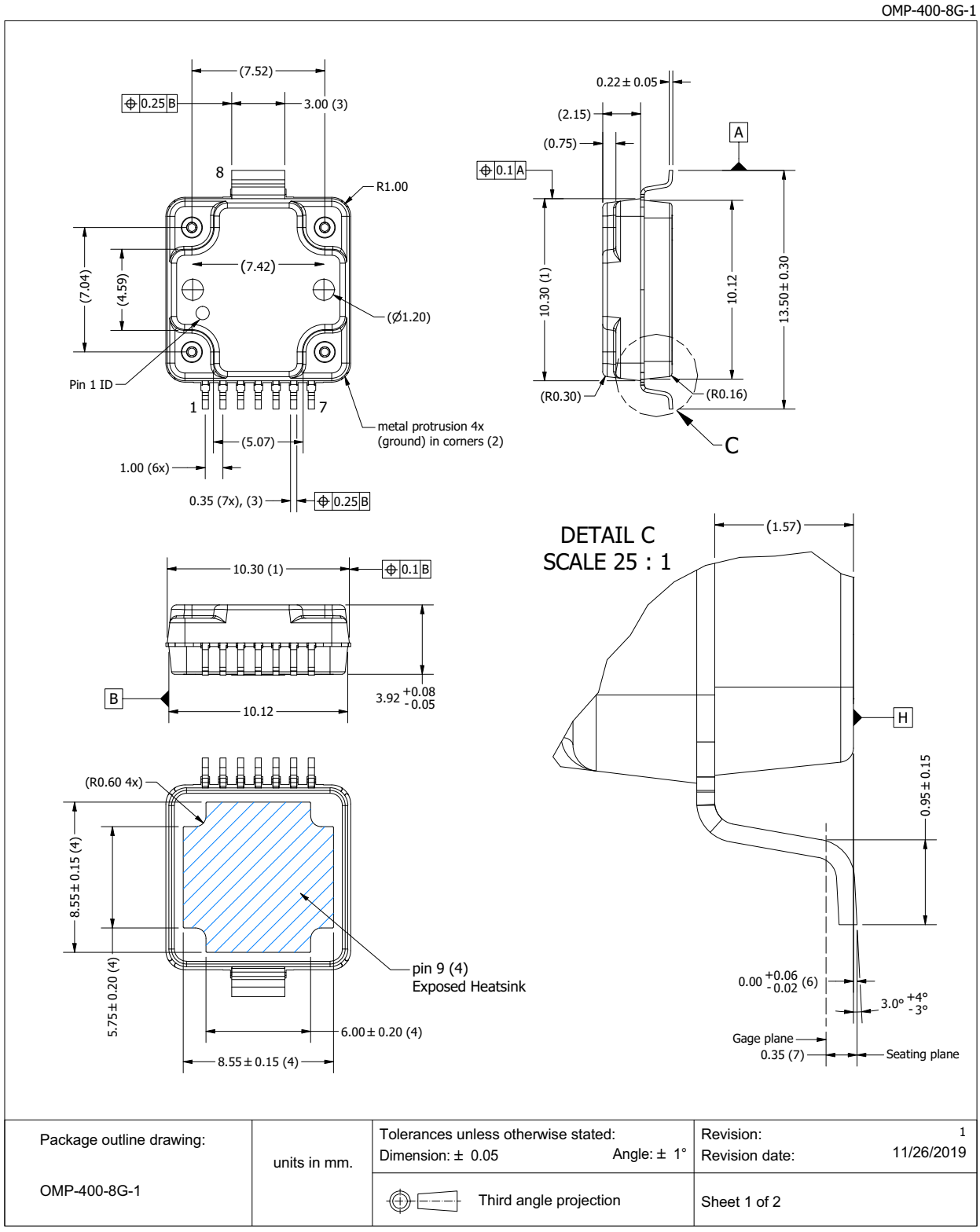

Fig 12. Package outline OMP-400-8G-1 (sheet 1 of 2)

All information provided in this document is subject to legal disclaimers.
© Ampleon Netherlands B.V. 2020. All rights reserved.

OMP-400-8G-1

Drawing Notes	
Items	Description
(1)	Dimensions are excluding mold protrusion. Areas located adjacent to the leads have a maximum mold protrusion of 0.25 mm (per side) and 0.62 mm max. in length. In between the 7 leads the protrusion is 0.25 mm max. At all other areas the mold protrusion is maximum 0.15 mm per side. See also detail B.
(2)	The metal protrusion (tie bars) in the corner will not stick out of the molding compound protrusions (detail A).
(3)	The lead dambar (metal) protrusions are not included. Add 0.14 mm max to the total lead dimension at the dambar location.
(4)	The hatched area indicates the exposed heatsink. The dimensions represent the values between two opposite points along the original heatsink perimeter.
(5)	The leads and exposed heatsink are plated with matte Tin (Sn).
(6)	Dimension is measured with respect to the bottom of the heatsink Datum H. Positive value means that the bottom of the heatsink is higher than the bottom of the lead.
(7)	Gage plane (foot length) to be measured from the seating plane.

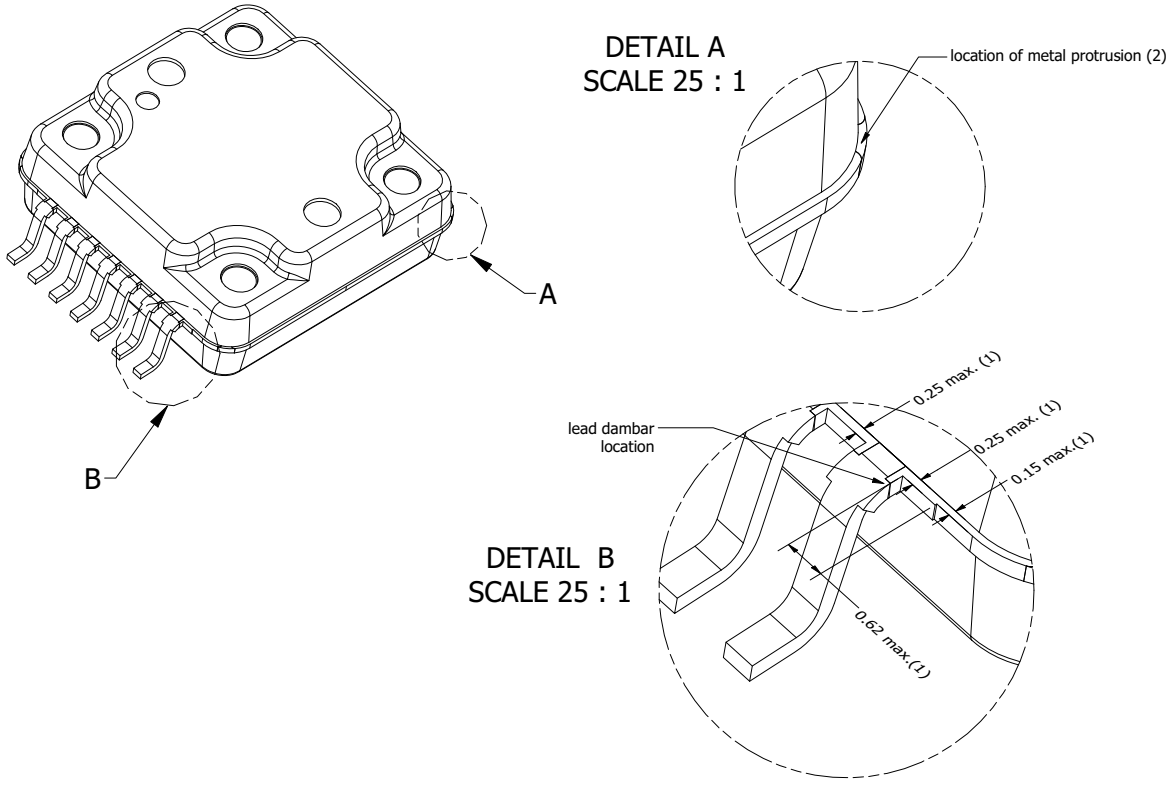

Package outline drawing: OMP-400-8G-1	units in mm.	Tolerances unless otherwise stated: Dimension: ± 0.05 Angle: ± 1° Third angle projection	Revision: 1 Revision date: 11/26/2019 Sheet 2 of 2

Fig 13. Package outline OMP-400-8G-1 (sheet 2 of 2)

All information provided in this document is subject to legal disclaimers.
© Ampleon Netherlands B.V. 2020. All rights reserved.

10. Handling information

CAUTION



This device is sensitive to ElectroStatic Discharge (ESD). Observe precautions for handling electrostatic sensitive devices.

Such precautions are described in the *ANSI/ESD S20.20*, *IEC/ST 61340-5*, *JESD625-A* or equivalent standards.

Table 11. ESD sensitivity

ESD model	Class
Charged Device Model (CDM); According to ANSI/ESDA/JEDEC standard JS-002	C1 [1]
Human Body Model (HBM); According to ANSI/ESDA/JEDEC standard JS-001	1B [2]

[1] CDM classification C1 is granted to any part that passes after exposure to an ESD pulse of 250 V.

[2] HBM classification 1B is granted to any part that passes after exposure to an ESD pulse of 500 V.

11. Abbreviations

Table 12. Abbreviations

Acronym	Description
CW	Continuous Wave
ESD	ElectroStatic Discharge
GEN10	Tenth Generation
GSM	Global System for Mobile Communications
LDMOS	Laterally Diffused Metal Oxide Semiconductor
LTE	Long Term Evolution
mMIMO	Massive Multiple Input-Multiple Output
MMIC	Monolithic Microwave Integrated Circuit
MTF	Median Time to Failure
OBO	Output Back Off
PAR	Peak-to-Average Ratio
RoHS	Restriction of Hazardous Substances
VSWR	Voltage Standing Wave Ratio
W-CDMA	Wideband Code Division Multiple Access

12. Revision history

Table 13. Revision history

Document ID	Release date	Data sheet status	Change notice	Supersedes
BLM10D3438-70ABG v.1	20200918	Product data sheet	-	-

All information provided in this document is subject to legal disclaimers.
© Ampleon Netherlands B.V. 2020. All rights reserved.

13. Legal information

13.1 Data sheet status

Document status[1][2]	Product status[3]	Definition
Objective [short] data sheet	Development	This document contains data from the objective specification for product development.
Preliminary [short] data sheet	Qualification	This document contains data from the preliminary specification.
Product [short] data sheet	Production	This document contains the product specification.

[1] Please consult the most recently issued document before initiating or completing a design.

[2] The term 'short data sheet' is explained in section "Definitions".

[3] The product status of device(s) described in this document may have changed since this document was published and may differ in case of multiple devices. The latest product status information is available on the Internet at URL http://www.ampleon.com.

13.2 Definitions

Draft — The document is a draft version only. The content is still under internal review and subject to formal approval, which may result in modifications or additions. Ampleon does not give any representations or warranties as to the accuracy or completeness of information included herein and shall have no liability for the consequences of use of such information.

Short data sheet — A short data sheet is an extract from a full data sheet with the same product type number(s) and title. A short data sheet is intended for quick reference only and should not be relied upon to contain detailed and full information. For detailed and full information see the relevant full data sheet, which is available on request via the local Ampleon sales office. In case of any inconsistency or conflict with the short data sheet, the full data sheet shall prevail.

Product specification — The information and data provided in a Product data sheet shall define the specification of the product as agreed between Ampleon and its customer, unless Ampleon and customer have explicitly agreed otherwise in writing. In no event however, shall an agreement be valid in which the Ampleon product is deemed to offer functions and qualities beyond those described in the Product data sheet.

13.3 Disclaimers

Maturity — The information in this document can only be regarded as final once the relevant product(s) has passed the Release Gate in Ampleon's release process. Prior to such release this document should be regarded as a draft version.

Limited warranty and liability — Information in this document is believed to be accurate and reliable. However, Ampleon does not give any representations or warranties, expressed or implied, as to the accuracy or completeness of such information and shall have no liability for the consequences of use of such information. Ampleon takes no responsibility for the content in this document if provided by an information source outside of Ampleon.

In no event shall Ampleon be liable for any indirect, incidental, punitive, special or consequential damages (including - without limitation - lost profits, lost savings, business interruption, costs related to the removal or replacement of any products or rework charges) whether or not such damages are based on tort (including negligence), warranty, breach of contract or any other legal theory.

Notwithstanding any damages that customer might incur for any reason whatsoever, Ampleon's aggregate and cumulative liability towards customer for the products described herein shall be limited in accordance with the *Terms and conditions of commercial sale* of Ampleon.

No offer to sell or license — Nothing in this document may be interpreted or construed as an offer to sell products that is open for acceptance or the grant, conveyance or implication of any license under any copyrights, patents or other industrial or intellectual property rights.

Right to make changes — Ampleon reserves the right to make changes to information published in this document, including without limitation specifications and product descriptions, at any time and without notice. This document supersedes and replaces all information supplied prior to the publication hereof.

Suitability for use — Ampleon products are not designed, authorized or warranted to be suitable for use in life support, life-critical or safety-critical systems or equipment, nor in applications where failure or malfunction of an Ampleon product can reasonably be expected to result in personal injury, death or severe property or environmental damage. Ampleon and its suppliers accept no liability for inclusion and/or use of Ampleon products in such equipment or applications and therefore such inclusion and/or use is at the customer's own risk.

Applications — Applications that are described herein for any of these products are for illustrative purposes only. Ampleon makes no representation or warranty that such applications will be suitable for the specified use without further testing or modification.

Customers are responsible for the design and operation of their applications and products using Ampleon products, and Ampleon accepts no liability for any assistance with applications or customer product design. It is customer's sole responsibility to determine whether the Ampleon product is suitable and fit for the customer's applications and products planned, as well as for the planned application and use of customer's third party customer(s). Customers should provide appropriate design and operating safeguards to minimize the risks associated with their applications and products.

Ampleon does not accept any liability related to any default, damage, costs or problem which is based on any weakness or default in the customer's applications or products, or the application or use by customer's third party customer(s). Customer is responsible for doing all necessary testing for the customer's applications and products using Ampleon products in order to avoid a default of the applications and the products or of the application or use by customer's third party customer(s). Ampleon does not accept any liability in this respect.

Limiting values — Stress above one or more limiting values (as defined in the Absolute Maximum Ratings System of IEC 60134) will cause permanent damage to the device. Limiting values are stress ratings only and (proper) operation of the device at these or any other conditions above those given in the Recommended operating conditions section (if present) or the Characteristics sections of this document is not warranted. Constant or repeated exposure to limiting values will permanently and irreversibly affect the quality and reliability of the device.

Terms and conditions of commercial sale — Ampleon products are sold subject to the general terms and conditions of commercial sale, as published at http://www.ampleon.com/terms, unless otherwise agreed in a valid written individual agreement. In case an individual agreement is concluded only the terms and conditions of the respective agreement shall apply. Ampleon hereby expressly objects to applying the customer's general terms and conditions with regard to the purchase of Ampleon products by customer.

All information provided in this document is subject to legal disclaimers.

© Ampleon Netherlands B.V. 2020. All rights reserved.

Export control — This document as well as the item(s) described herein may be subject to export control regulations. Export might require a prior authorization from competent authorities.

Non-automotive qualified products — Unless this data sheet expressly states that this specific Ampleon product is automotive qualified, the product is not suitable for automotive use. It is neither qualified nor tested in accordance with automotive testing or application requirements. Ampleon accepts no liability for inclusion and/or use of non-automotive qualified products in automotive equipment or applications.

In the event that customer uses the product for design-in and use in automotive applications to automotive specifications and standards, customer (a) shall use the product without Ampleon's warranty of the product for such automotive applications, use and specifications, and (b) whenever customer uses the product for automotive applications beyond Ampleon's specifications such use shall be solely at customer's own risk, and (c) customer fully indemnifies Ampleon for any liability, damages or failed product claims resulting from customer design and use of the product for automotive applications beyond Ampleon's standard warranty and Ampleon's product specifications.

Translations — A non-English (translated) version of a document is for reference only. The English version shall prevail in case of any discrepancy between the translated and English versions.

13.4 Trademarks

Notice: All referenced brands, product names, service names and trademarks are the property of their respective owners.

14. Contact information

For more information, please visit: **http://www.ampleon.com**

For sales office addresses, please visit: **http://www.ampleon.com/sales**

All information provided in this document is subject to legal disclaimers.
© Ampleon Netherlands B.V. 2020. All rights reserved.

15. Contents

1 Product profile 1
1.1 General description 1
1.2 Features and benefits 1
1.3 Applications 1
2 Pinning information 2
2.1 Pinning 2
2.2 Pin description 2
3 Ordering information 2
4 Block diagram 3
5 Limiting values 3
6 Thermal characteristics 3
7 Characteristics 4
8 Application information 4
8.1 Ruggedness in a Doherty operation 8
8.2 Impedance information 8
8.3 Graphs 9
9 Package outline 12
10 Handling information 14
11 Abbreviations 14
12 Revision history 14
13 Legal information 15
13.1 Data sheet status 15
13.2 Definitions 15
13.3 Disclaimers 15
13.4 Trademarks 16
14 Contact information 16
15 Contents 17

Please be aware that important notices concerning this document and the product(s) described herein, have been included in section 'Legal information'.

© Ampleon Netherlands B.V. 2020. All rights reserved.

For more information, please visit: http://www.ampleon.com
For sales office addresses, please visit: http://www.ampleon.com/sales

Date of release: 18 September 2020
Document identifier: BLM10D3438-70ABG

ENTEGRECİ

Bu belge www.entegreci.com üzerinden sunulmaktadır.

Elektronik komponent tedarikinde Entegreci

Entegreci, Eskişehir merkezli, Türkiye geneline satış yapan bir elektronik komponent mağazasıdır. Entegreler (IC), mikrodenetleyiciler, transistörler, diyotlar, pasif elemanlar, konnektörler, modüller ve geliştirme kartları tek adetten seri üretim adetlerine kadar satılır. Ürün sayfalarında güncel stok durumunu, fiyatı ve datasheet bağlantısını bulabilirsiniz.

Parça koduyla arama

Üretici parça numarasını yazın; stok ve fiyatı hemen görün.

www.entegreci.com

Ürün kategorileri

Entegreden kapasitöre tüm elektronik komponent kategorileri.

Kategorilere göz atın

Üreticiler

Aradığınız üreticinin ürünlerini tek sayfada inceleyin.

Üreticileri görün

Toplu alım ve teklif

Listede olmayan ya da yüksek adetli parçalar için teklif isteyin.

Teklif isteyin

www.entegreci.com | **destek@entegreci.com** | **0850 305 90 34**

Entegreci is an online electronic components store based in Türkiye. Search by manufacturer part number to see stock, prices and datasheets for integrated circuits, microcontrollers, transistors, passive components and connectors, or request a quote for parts that are not listed.

Bu sayfa Entegreci tarafından eklenmiştir. Belgenin önceki sayfaları asıl yayıncısına aittir ve içeriği değiştirilmemiştir; en güncel sürüm için belgenin yayıncısına başvurun.