APTM50UM13SAG

Single switch
Series & parallel diodes
MOSFET Power Module

V_{DSS} = 500V
R_{DSon} = 13mΩ typ @ Tj = 25°C
I_D = 335A @ Tc = 25°C

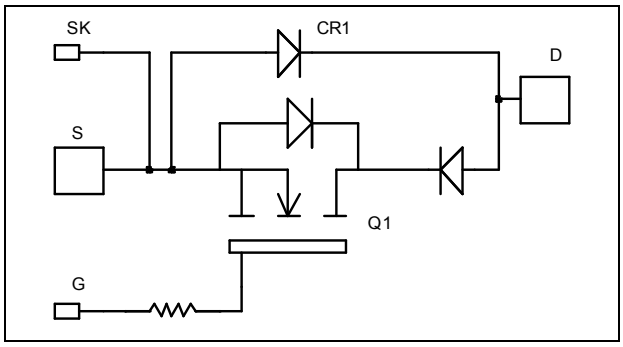

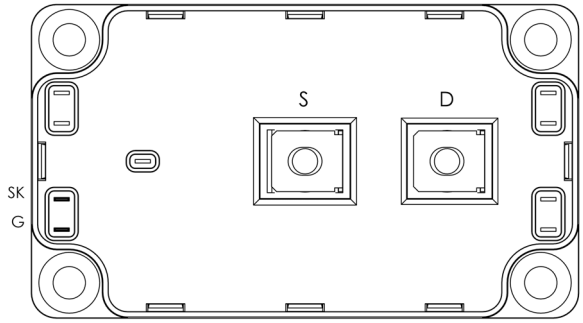

Application

- Welding converters
- Switched Mode Power Supplies
- Uninterruptible Power Supplies
- Motor control

Features

- Power MOS 7® MOSFETs
  - Low R_{DSon}
  - Low input and Miller capacitance
  - Low gate charge
  - Avalanche energy rated
  - Very rugged
- Kelvin source for easy drive
- Very low stray inductance
  - Symmetrical design
  - M5 power connectors
- High level of integration
- AlN substrate for improved thermal performance

Benefits

- Outstanding performance at high frequency operation
- Direct mounting to heatsink (isolated package)
- Low junction to case thermal resistance
- Low profile
- RoHS Compliant

All ratings @ T_j = 25°C unless otherwise specified

Absolute maximum ratings

Symbol	*Parameter*		*Max ratings*	*Unit*
V_{DSS}	Drain - Source Breakdown Voltage		500	V
I_D	Continuous Drain Current	T_c = 25°C	335	A
		T_c = 80°C	250	
I_{DM}	Pulsed Drain current		1340	
V_{GS}	Gate - Source Voltage		±30	V
R_{DSon}	Drain - Source ON Resistance		15	mΩ
P_D	Maximum Power Dissipation	T_c = 25°C	3290	W
I_{AR}	Avalanche current (repetitive and non repetitive)		71	A
E_{AR}	Repetitive Avalanche Energy		50	mJ
E_{AS}	Single Pulse Avalanche Energy		3000	

CAUTION: These Devices are sensitive to Electrostatic Discharge. Proper Handling Procedures Should Be Followed. See application note APT0502 on www.microsemi.com

Electrical Characteristics

Symbol	Characteristic	Test Conditions	Min	Typ	Max	Unit
I_{DSS}	Zero Gate Voltage Drain Current	V_{GS} = 0V, V_{DS} = 500V			400	µA
$R_{DS(on)}$	Drain – Source on Resistance	V_{GS} = 10V, I_D = 167.5A		13	15	mΩ
$V_{GS(th)}$	Gate Threshold Voltage	V_{GS} = V_{DS}, I_D = 20mA	3		5	V
I_{GSS}	Gate – Source Leakage Current	V_{GS} = ±30 V, V_{DS} = 0V			±300	nA

Dynamic Characteristics

Symbol	Characteristic	Test Conditions	Min	Typ	Max	Unit
C_{iss}	Input Capacitance	V_{GS} = 0V V_{DS} = 25V f = 1MHz		42.2		nF
C_{oss}	Output Capacitance			8.24		
C_{rss}	Reverse Transfer Capacitance			0.42		
Q_g	Total gate Charge	V_{GS} = 10V V_{Bus} = 250V I_D =335A		800		nC
Q_{gs}	Gate – Source Charge			200		
Q_{gd}	Gate – Drain Charge			420		
$T_{d(on)}$	Turn-on Delay Time	**Inductive switching @ 125°C** V_{GS} = 15V V_{Bus} = 333V I_D = 335A R_G = 0.8Ω		21		ns
T_r	Rise Time			42		
$T_{d(off)}$	Turn-off Delay Time			96		
T_f	Fall Time			100		
E_{on}	Turn-on Switching Energy	**Inductive switching @ 25°C** V_{GS} = 15V, V_{Bus} = 333V I_D = 335A, R_G = 0.8Ω		4		mJ
E_{off}	Turn-off Switching Energy			4.16		
E_{on}	Turn-on Switching Energy	**Inductive switching @ 125°C** V_{GS} = 15V, V_{Bus} = 333V I_D = 335A, R_G =0.8Ω		6.32		mJ
E_{off}	Turn-off Switching Energy			4.64		
R_{thJC}	Junction to Case Thermal Resistance				0.038	°C/W

Series diode ratings and characteristics

Symbol	Characteristic	Test Conditions		Min	Typ	Max	Unit
V_{RRM}	Maximum Peak Repetitive Reverse Voltage			600			V
I_{RM}	Maximum Reverse Leakage Current	V_R=600V				150	µA
I_F	DC Forward Current		T_c = 80°C		360		A
V_F	Diode Forward Voltage	I_F = 360A			1.7	2.5	V
		I_F = 720A			2		
		I_F = 360A	T_j = 125°C		1.4		
t_{rr}	Reverse Recovery Time	I_F = 360A V_R = 400V di/dt = 1200A/µs	T_j = 25°C		70		ns
			T_j = 125°C		140		
Q_{rr}	Reverse Recovery Charge		T_j = 25°C		0.6		µC
			T_j = 125°C		4.2		
R_{thJC}	Junction to Case Thermal Resistance					0.16	°C/W

Parallel diode ratings and characteristics

Symbol	Characteristic	Test Conditions		Min	Typ	Max	Unit
V_{RRM}	Maximum Peak Repetitive Reverse Voltage			600			V
I_{RM}	Maximum Reverse Leakage Current	V_R = 600V				150	µA
I_F	DC Forward Current		T_c = 80°C		360		A
V_F	Diode Forward Voltage	I_F = 360A			1.7	2.5	V
		I_F = 720A			2		
		I_F = 360A	T_j = 125°C		1.4		
t_{rr}	Reverse Recovery Time	I_F = 360A V_R = 400V di/dt = 1200A/µs	T_j = 25°C		70		ns
			T_j = 125°C		140		
Q_{rr}	Reverse Recovery Charge		T_j = 25°C		0.6		µC
			T_j = 125°C		4.2		
R_{thJC}	Junction to Case Thermal Resistance					0.16	°C/W

Thermal and package characteristics

Symbol	Characteristic			Min	Max	Unit
V_{ISOL}	RMS Isolation Voltage, any terminal to case t =1 min, 50/60Hz			4000		V
T_J	Operating junction temperature range			-40	150	°C
T_{JOP}	Recommended junction temperature under switching conditions			-40	$T_J$max -25	
T_{STG}	Storage Temperature Range			-40	125	
T_C	Operating Case Temperature			-40	100	
Torque	Mounting torque	To heatsink	M6	3	5	N.m
		For terminals	M5	2	3.5	
Wt	Package Weight				300	g

SP6 Package outline (dimensions in mm)

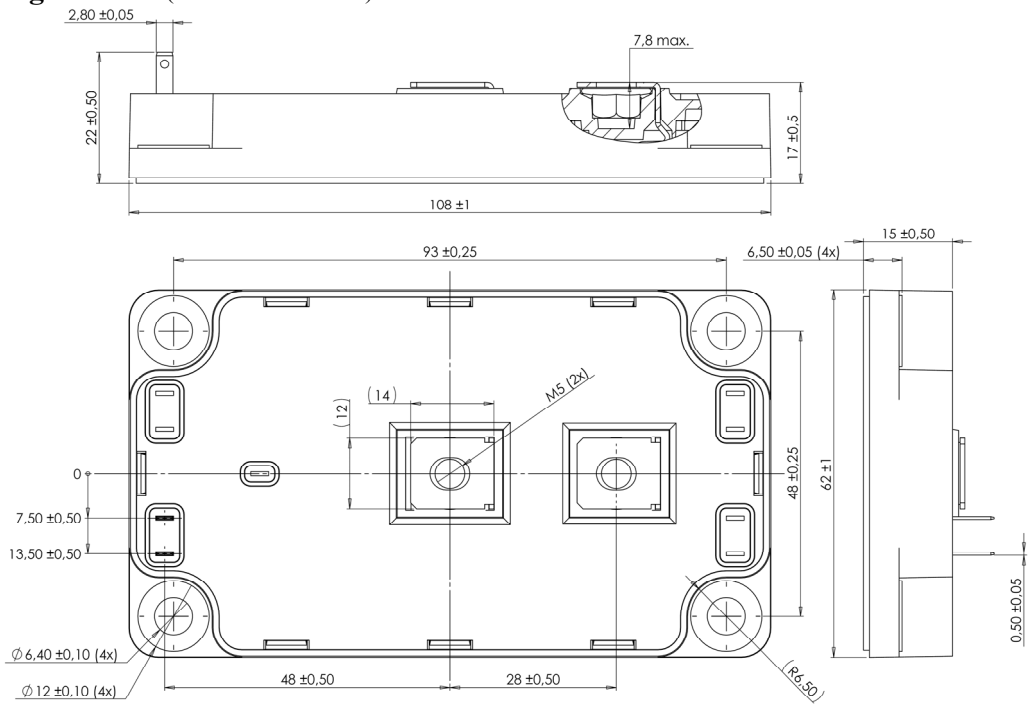

See application note APT0601 - Mounting Instructions for SP6 Power Modules on www.microsemi.com

Typical Performance Curve

Maximum Effective Transient Thermal Impedance, Junction to Case vs Pulse Duration

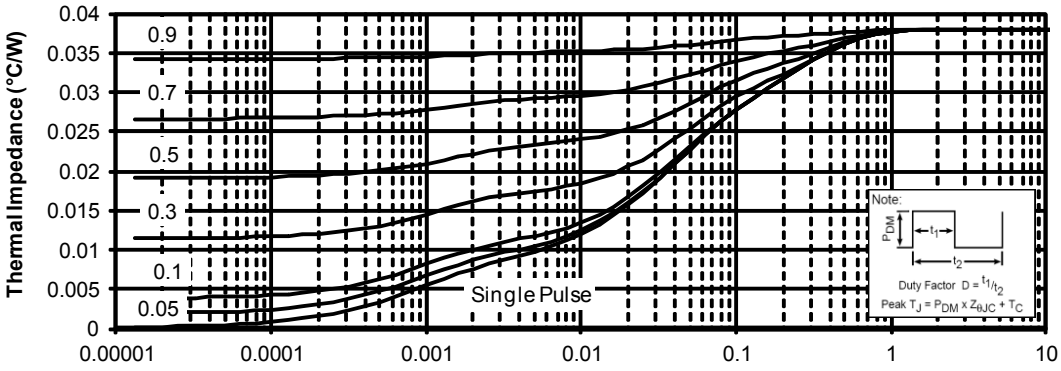

Low Voltage Output Characteristics

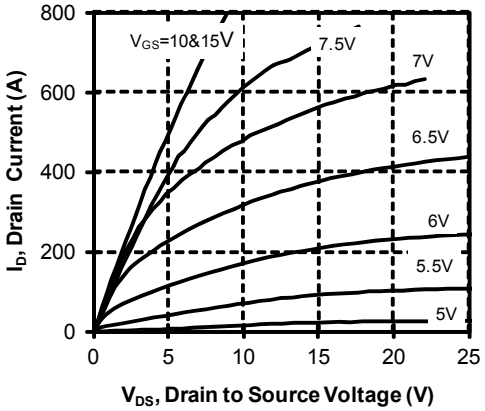

Transfert Characteristics

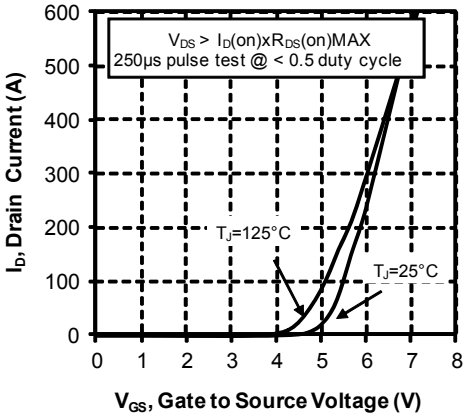

R_{DS}(on) vs Drain Current

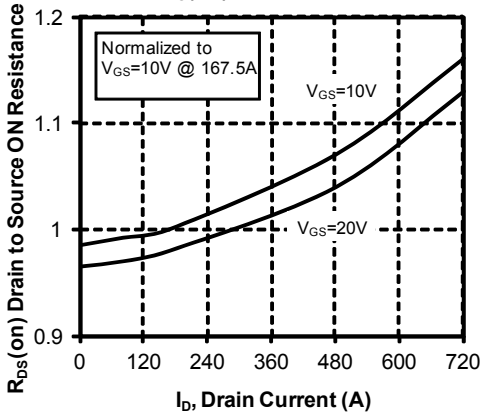

DC Drain Current vs Case Temperature

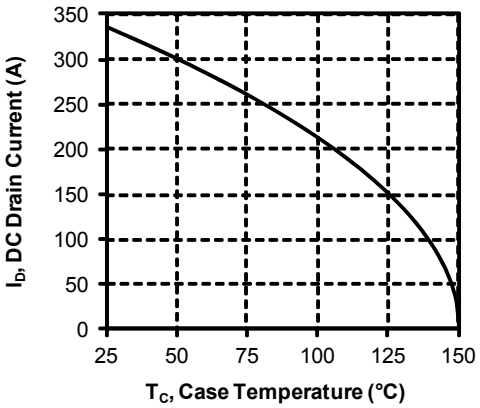

Breakdown Voltage vs Temperature

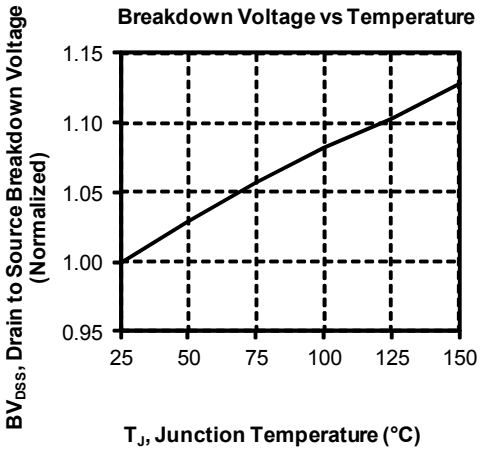

ON resistance vs Temperature

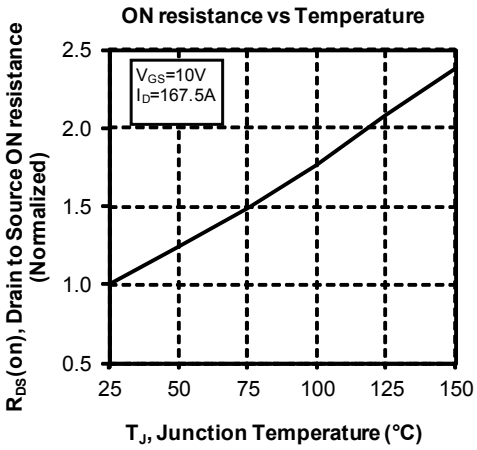

Threshold Voltage vs Temperature

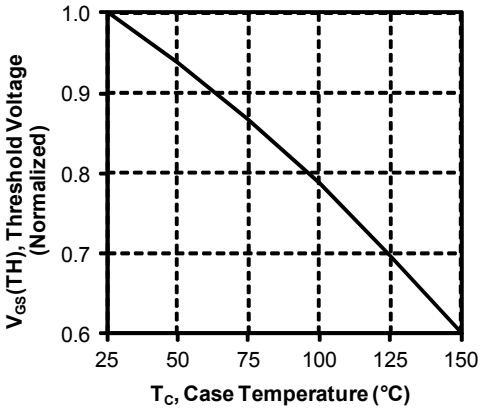

Maximum Safe Operating Area

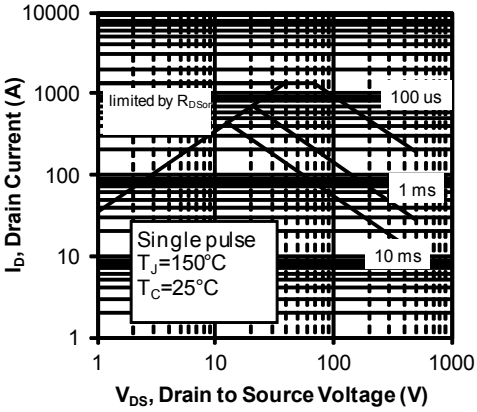

Capacitance vs Drain to Source Voltage

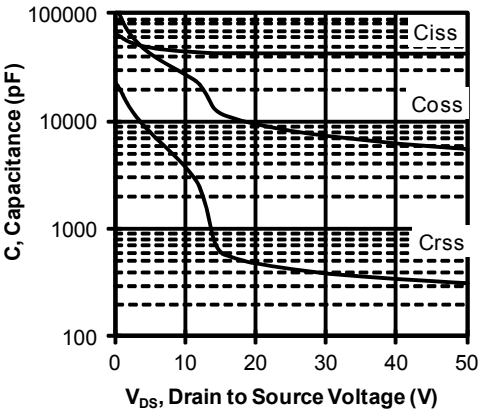

Gate Charge vs Gate to Source Voltage

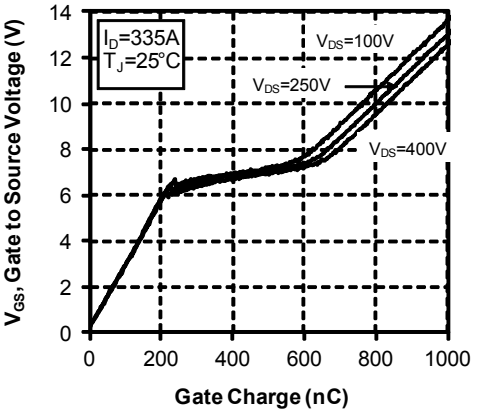

Delay Times vs Current

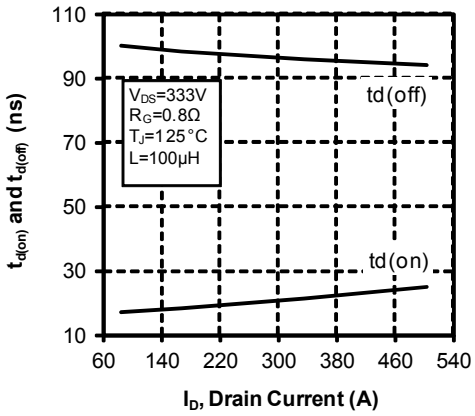

Rise and Fall times vs Current

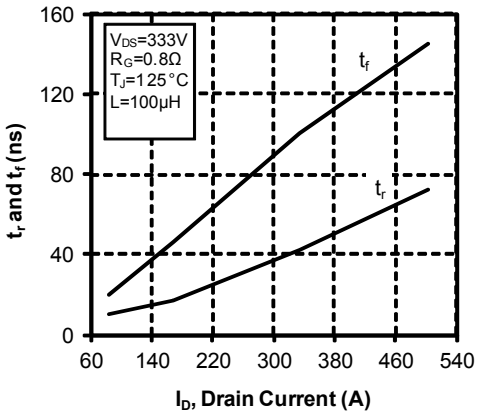

Switching Energy vs Current

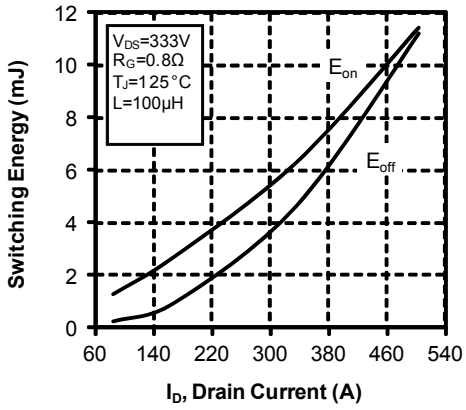

Switching Energy vs Gate Resistance

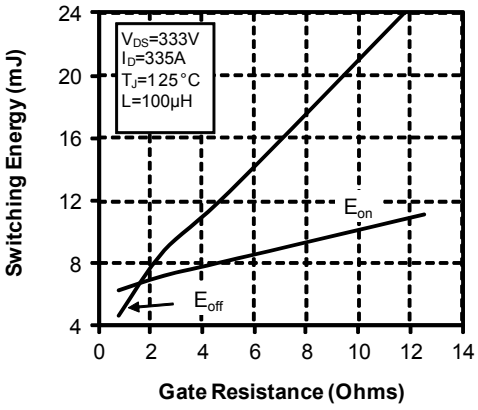

Operating Frequency vs Drain Current

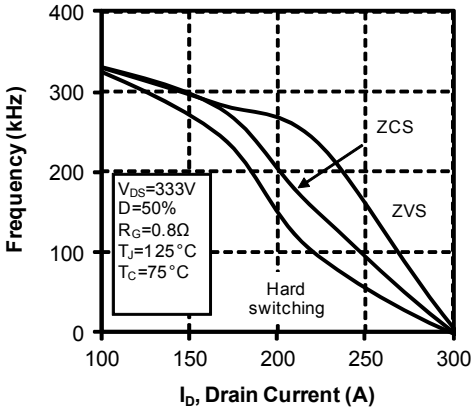

Source to Drain Diode Forward Voltage

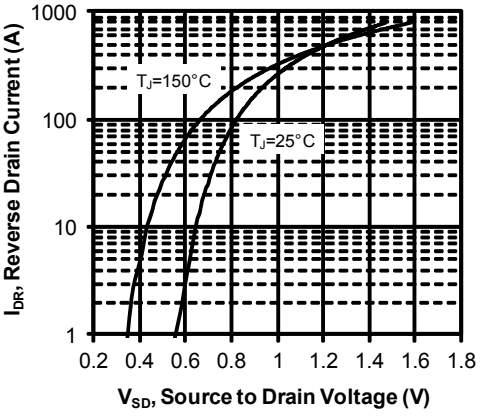

DISCLAIMER

The information contained in the document (unless it is publicly available on the Web without access restrictions) is PROPRIETARY AND CONFIDENTIAL information of Microsemi and cannot be copied, published, uploaded, posted, transmitted, distributed or disclosed or used without the express duly signed written consent of Microsemi. If the recipient of this document has entered into a disclosure agreement with Microsemi, then the terms of such Agreement will also apply. This document and the information contained herein may not be modified, by any person other than authorized personnel of Microsemi. No license under any patent, copyright, trade secret or other intellectual property right is granted to or conferred upon you by disclosure or delivery of the information, either expressly, by implication, inducement, estoppels or otherwise. Any license under such intellectual property rights must be approved by Microsemi in writing signed by an officer of Microsemi.

Microsemi reserves the right to change the configuration, functionality and performance of its products at anytime without any notice. This product has been subject to limited testing and should not be used in conjunction with life-support or other mission-critical equipment or applications. Microsemi assumes no liability whatsoever, and Microsemi disclaims any express or implied warranty, relating to sale and/or use of Microsemi products including liability or warranties relating to fitness for a particular purpose, merchantability, or infringement of any patent, copyright or other intellectual property right. Any performance specifications believed to be reliable but are not verified and customer or user must conduct and complete all performance and other testing of this product as well as any user or customers final application. User or customer shall not rely on any data and performance specifications or parameters provided by Microsemi. It is the customer's and user's responsibility to independently determine suitability of any Microsemi product and to test and verify the same. The information contained herein is provided "AS IS, WHERE IS" and with all faults, and the entire risk associated with such information is entirely with the User. Microsemi specifically disclaims any liability of any kind including for consequential, incidental and punitive damages as well as lost profit. The product is subject to other terms and conditions which can be located on the web at http://www.microsemi.com/legal/tnc.asp

Life Support Application

Seller's Products are not designed, intended, or authorized for use as components in systems intended for space, aviation, surgical implant into the body, in other applications intended to support or sustain life, or for any other application in which the failure of the Seller's Product could create a situation where personal injury, death or property damage or loss may occur (collectively "Life Support Applications").

Buyer agrees not to use Products in any Life Support Applications and to the extent it does it shall conduct extensive testing of the Product in such applications and further agrees to indemnify and hold Seller, and its officers, employees, subsidiaries, affiliates, agents, sales representatives and distributors harmless against all claims, costs, damages and expenses, and attorneys' fees and costs arising, directly or directly, out of any claims of personal injury, death, damage or otherwise associated with the use of the goods in Life Support Applications, even if such claim includes allegations that Seller was negligent regarding the design or manufacture of the goods.

Buyer must notify Seller in writing before using Seller's Products in Life Support Applications. Seller will study with Buyer alternative solutions to meet Buyer application specification based on Sellers sales conditions applicable for the new proposed specific part.

ENTEGRECİ

Bu belge www.entegreci.com üzerinden sunulmaktadır.

Elektronik komponent tedarikinde Entegreci

Entegreci, Eskişehir merkezli, Türkiye geneline satış yapan bir elektronik komponent mağazasıdır. Entegreler (IC), mikrodenetleyiciler, transistörler, diyotlar, pasif elemanlar, konnektörler, modüller ve geliştirme kartları tek adetten seri üretim adetlerine kadar satılır. Ürün sayfalarında güncel stok durumunu, fiyatı ve datasheet bağlantısını bulabilirsiniz.

Parça koduyla arama

Üretici parça numarasını yazın; stok ve fiyatı hemen görün.

www.entegreci.com

Ürün kategorileri

Entegreden kapasitöre tüm elektronik komponent kategorileri.

Kategorilere göz atın

Üreticiler

Aradığınız üreticinin ürünlerini tek sayfada inceleyin.

Üreticileri görün

Toplu alım ve teklif

Listede olmayan ya da yüksek adetli parçalar için teklif isteyin.

Teklif isteyin

www.entegreci.com | **destek@entegreci.com** | **0850 305 90 34**

Entegreci is an online electronic components store based in Türkiye. Search by manufacturer part number to see stock, prices and datasheets for integrated circuits, microcontrollers, transistors, passive components and connectors, or request a quote for parts that are not listed.

Bu sayfa Entegreci tarafından eklenmiştir. Belgenin önceki sayfaları asıl yayıncısına aittir ve içeriği değiştirilmemiştir; en güncel sürüm için belgenin yayıncısına başvurun.