Phase leg
Fast Trench + Field Stop IGBT3
Power Module

V_{CES} = 1200V
I_C = 150A @ Tc = 80°C

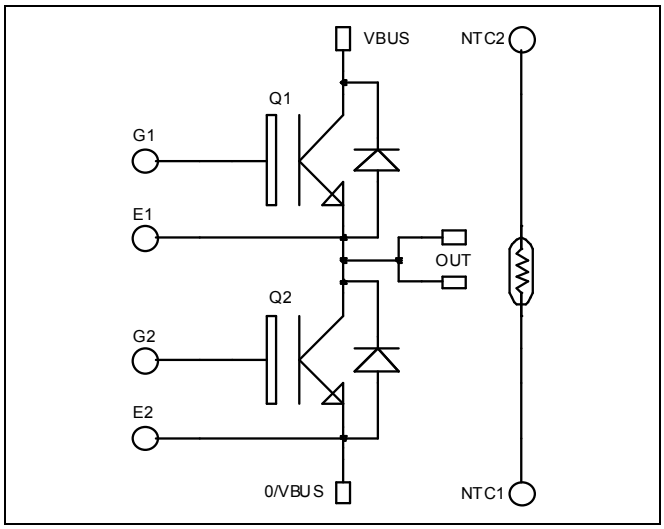

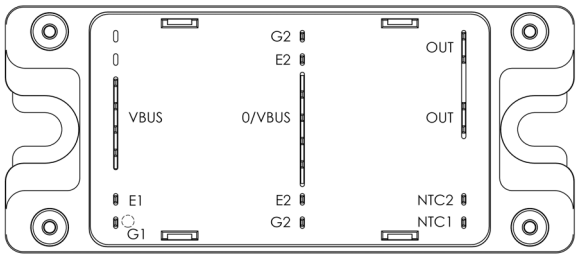

Application

- Welding converters
- Switched Mode Power Supplies
- Uninterruptible Power Supplies
- Motor control

Features

- Fast Trench + Field Stop IGBT3 Technology
  - Low voltage drop
  - Low tail current
  - Switching frequency up to 20 kHz
  - Soft recovery parallel diodes
  - Low diode VF
  - Low leakage current
  - RBSOA and SCSOA rated
- Kelvin emitter for easy drive
- Very low stray inductance
  - Symmetrical design
  - Lead frames for power connections
- High level of integration
- Internal thermistor for temperature monitoring

Benefits

- Stable temperature behavior
- Very rugged
- Solderable terminals for easy PCB mounting
- Direct mounting to heatsink (isolated package)
- Low junction to case thermal resistance
- Easy paralleling due to positive TC of VCEsat
- Low profile
- RoHS Compliant

Absolute maximum ratings

Symbol	*Parameter*		*Max ratings*	*Unit*
V_{CES}	Collector - Emitter Breakdown Voltage		1200	V
I_C	Continuous Collector Current	T_C = 25°C	220	A
		T_C = 80°C	150	
I_{CM}	Pulsed Collector Current	T_C = 25°C	350	
V_{GE}	Gate – Emitter Voltage		±20	V
P_D	Maximum Power Dissipation	T_C = 25°C	690	W
RBSOA	Reverse Bias Safe Operating Area	T_j = 125°C	300A @ 1150V	

CAUTION: These Devices are sensitive to Electrostatic Discharge. Proper Handling Procedures Should Be Followed. See application note APT0502 on www.microsemi.com

All ratings @ T_j = 25°C unless otherwise specified

Electrical Characteristics

Symbol	*Characteristic*	*Test Conditions*		*Min*	*Typ*	*Max*	*Unit*
I_{CES}	Zero Gate Voltage Collector Current	V_{GE} = 0V, V_{CE} = 1200V				250	µA
$V_{CE(sat)}$	Collector Emitter Saturation Voltage	V_{GE} = 15V, I_C = 150A	T_j = 25°C		1.7	2.1	V
			T_j = 125°C		2.0		
$V_{GE(th)}$	Gate Threshold Voltage	V_{GE} = V_{CE}, I_C = 3 mA		5.0	5.8	6.5	V
I_{GES}	Gate – Emitter Leakage Current	V_{GE} = 20V, V_{CE} = 0V				400	nA

Dynamic Characteristics

Symbol	*Characteristic*	*Test Conditions*		*Min*	*Typ*	*Max*	*Unit*
C_{ies}	Input Capacitance	V_{GE} = 0V V_{CE} = 25V f = 1MHz			10.7		nF
C_{oes}	Output Capacitance				0.56		
C_{res}	Reverse Transfer Capacitance				0.48		
$T_{d(on)}$	Turn-on Delay Time	Inductive Switching (25°C) V_{GE} = ±15V V_{Bus} = 600V I_C = 150A R_G = 2.2Ω			280		ns
T_r	Rise Time				40		
$T_{d(off)}$	Turn-off Delay Time				420		
T_f	Fall Time				75		
$T_{d(on)}$	Turn-on Delay Time	Inductive Switching (125°C) V_{GE} = ±15V V_{Bus} = 600V I_C = 150A R_G = 2.2Ω			290		ns
T_r	Rise Time				45		
$T_{d(off)}$	Turn-off Delay Time				520		
T_f	Fall Time				90		
E_{on}	Turn-on Switching Energy	V_{GE} = ±15V V_{Bus} = 600V I_C = 150A R_G = 2.2Ω	T_j = 125°C		14		mJ
E_{off}	Turn-off Switching Energy		T_j = 125°C		16		

Reverse diode ratings and characteristics

Symbol	*Characteristic*	*Test Conditions*		*Min*	*Typ*	*Max*	*Unit*
V_{RRM}	Maximum Peak Repetitive Reverse Voltage			1200			V
I_{RM}	Maximum Reverse Leakage Current	V_R=1200V	T_j = 25°C			250	µA
			T_j = 125°C			500	
I_F	DC Forward Current		Tc = 80°C		150		A
V_F	Diode Forward Voltage	I_F = 150A	T_j = 25°C		1.6	2.1	V
			T_j = 125°C		1.6		
t_{rr}	Reverse Recovery Time	I_F = 150A V_R = 600V di/dt =3000A/µs	T_j = 25°C		170		ns
			T_j = 125°C		280		
Q_{rr}	Reverse Recovery Charge		T_j = 25°C		15		µC
			T_j = 125°C		29		
E_r	Reverse Recovery Energy		T_j = 25°C		7		mJ
			T_j = 125°C		12		

Temperature sensor NTC (see application note APT0406 on www.microsemi.com for more information).

Symbol	Characteristic	Min	Typ	Max	Unit
R_{25}	Resistance @ 25°C		50		kΩ
$B_{25/85}$	T_{25} = 298.15 K		3952		K

$$R_T = \frac{R_{25}}{\exp\left[B_{25/85}\left(\frac{1}{T_{25}} - \frac{1}{T}\right)\right]}$$

T: Thermistor temperature
R_T: Thermistor value at T

Thermal and package characteristics

Symbol	Characteristic			Min	Typ	Max	Unit
R_{thJC}	Junction to Case Thermal Resistance		IGBT			0.18	°C/W
			Diode			0.34	
V_{ISOL}	RMS Isolation Voltage, any terminal to case t =1 min, 50/60Hz			4000			V
T_J	Operating junction temperature range			-40		150	°C
T_{STG}	Storage Temperature Range			-40		125	
T_C	Operating Case Temperature			-40		125	
Torque	Mounting torque	To Heatsink	M5	2.5		4.7	N.m
Wt	Package Weight					160	g

SP4 Package outline (dimensions in mm)

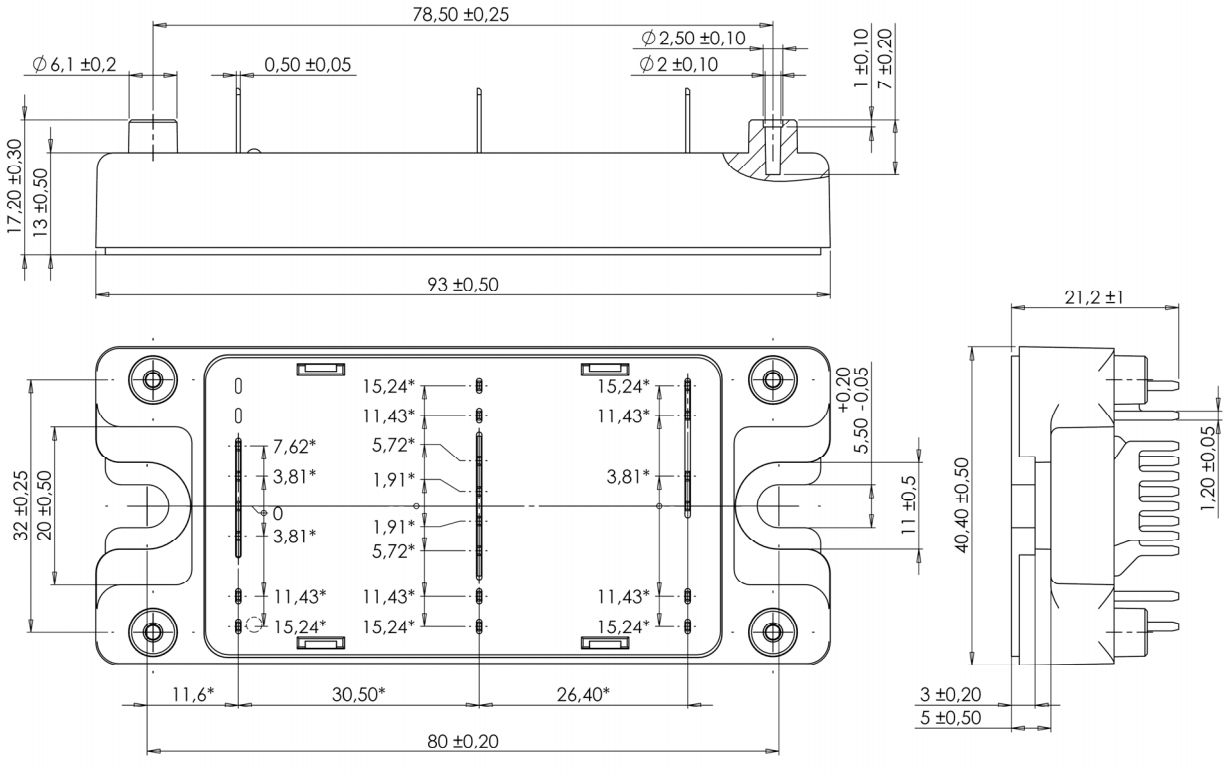

ALL DIMENSIONS MARKED "*" ARE TOLERANCED AS : ⌖ | ⌀ 1

See application note APT0501 - Mounting Instructions for SP4 Power Modules on www.microsemi.com

Typical Performance Curve

Output Characteristics (V_{GE}=15V)

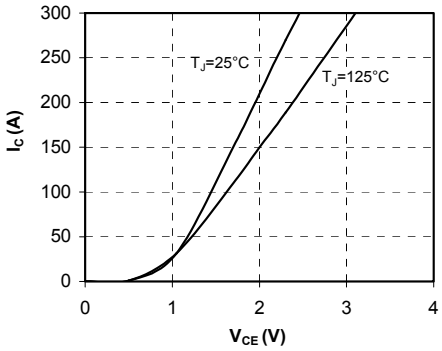

Output Characteristics

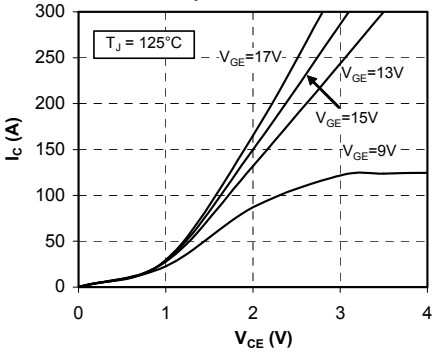

Transfert Characteristics

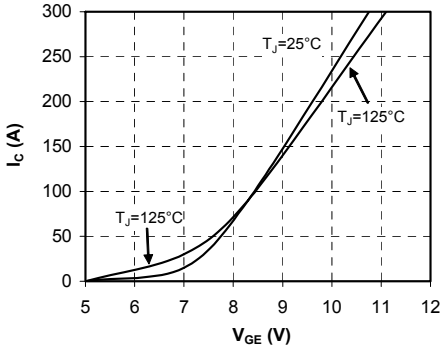

Energy losses vs Collector Current

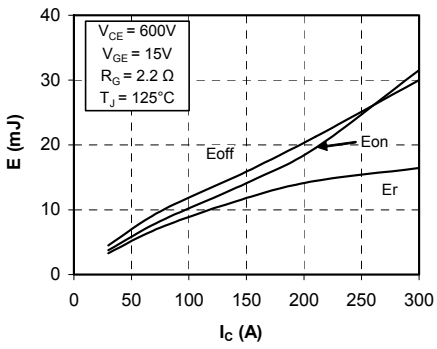

Switching Energy Losses vs Gate Resistance

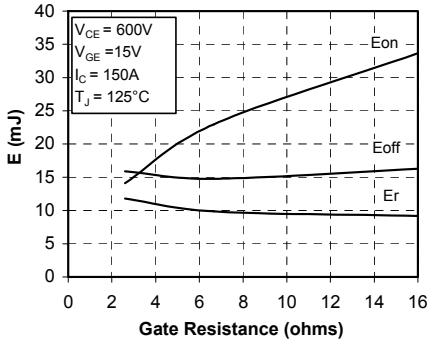

Reverse Bias Safe Operating Area

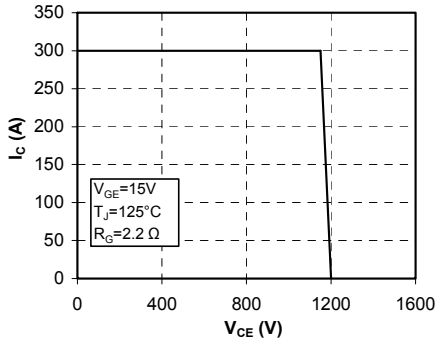

maximum Effective Transient Thermal Impedance, Junction to Case vs Pulse Duration

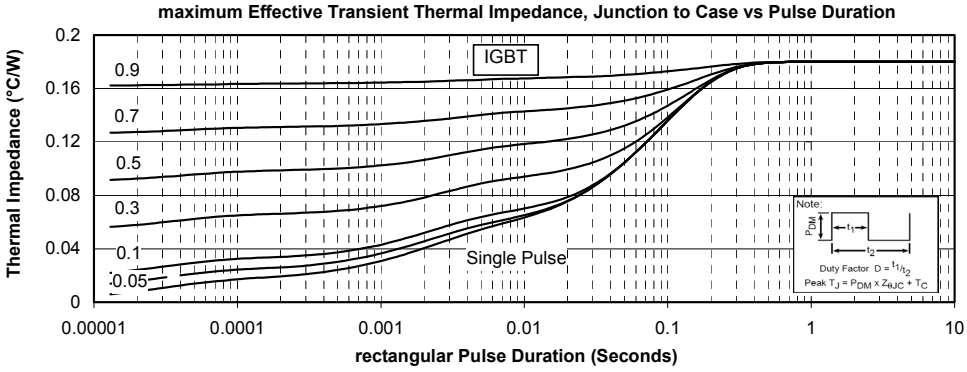

Operating Frequency vs Collector Current

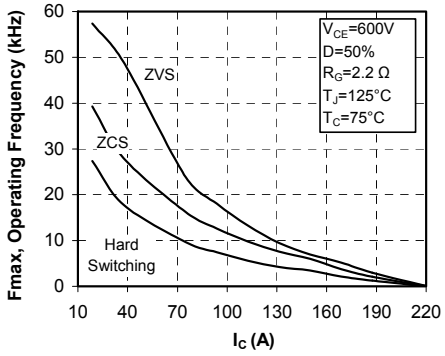

Forward Characteristic of diode

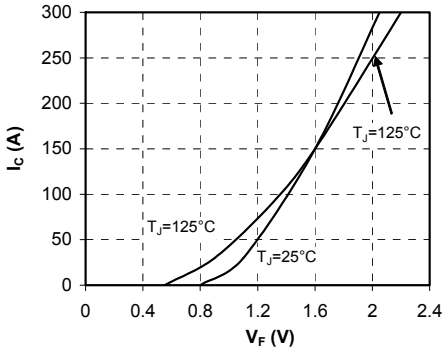

maximum Effective Transient Thermal Impedance, Junction to Case vs Pulse Duration

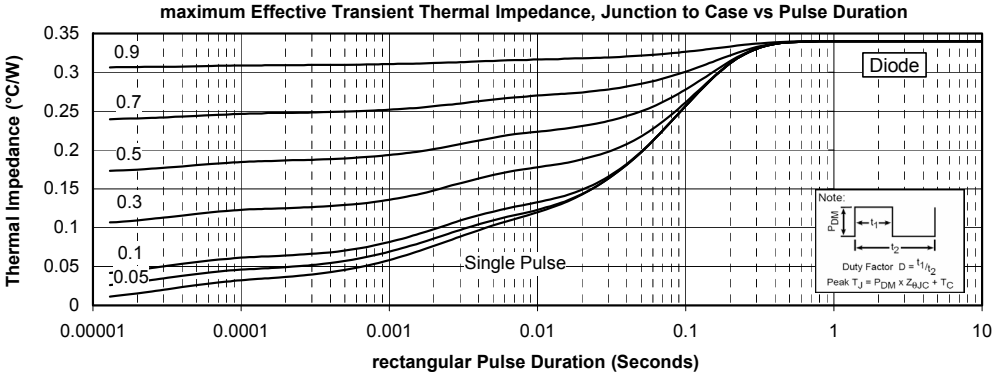

DISCLAIMER

The information contained in the document (unless it is publicly available on the Web without access restrictions) is PROPRIETARY AND CONFIDENTIAL information of Microsemi and cannot be copied, published, uploaded, posted, transmitted, distributed or disclosed or used without the express duly signed written consent of Microsemi. If the recipient of this document has entered into a disclosure agreement with Microsemi, then the terms of such Agreement will also apply. This document and the information contained herein may not be modified, by any person other than authorized personnel of Microsemi. No license under any patent, copyright, trade secret or other intellectual property right is granted to or conferred upon you by disclosure or delivery of the information, either expressly, by implication, inducement, estoppels or otherwise. Any license under such intellectual property rights must be approved by Microsemi in writing signed by an officer of Microsemi.

Microsemi reserves the right to change the configuration, functionality and performance of its products at anytime without any notice. This product has been subject to limited testing and should not be used in conjunction with life-support or other mission-critical equipment or applications. Microsemi assumes no liability whatsoever, and Microsemi disclaims any express or implied warranty, relating to sale and/or use of Microsemi products including liability or warranties relating to fitness for a particular purpose, merchantability, or infringement of any patent, copyright or other intellectual property right. Any performance specifications believed to be reliable but are not verified and customer or user must conduct and complete all performance and other testing of this product as well as any user or customers final application. User or customer shall not rely on any data and performance specifications or parameters provided by Microsemi. It is the customer's and user's responsibility to independently determine suitability of any Microsemi product and to test and verify the same. The information contained herein is provided "AS IS, WHERE IS" and with all faults, and the entire risk associated with such information is entirely with the User. Microsemi specifically disclaims any liability of any kind including for consequential, incidental and punitive damages as well as lost profit. The product is subject to other terms and conditions which can be located on the web at http://www.microsemi.com/legal/tnc.asp

Life Support Application

Seller's Products are not designed, intended, or authorized for use as components in systems intended for space, aviation, surgical implant into the body, in other applications intended to support or sustain life, or for any other application in which the failure of the Seller's Product could create a situation where personal injury, death or property damage or loss may occur (collectively "Life Support Applications").

Buyer agrees not to use Products in any Life Support Applications and to the extent it does it shall conduct extensive testing of the Product in such applications and further agrees to indemnify and hold Seller, and its officers, employees, subsidiaries, affiliates, agents, sales representatives and distributors harmless against all claims, costs, damages and expenses, and attorneys' fees and costs arising, directly or directly, out of any claims of personal injury, death, damage or otherwise associated with the use of the goods in Life Support Applications, even if such claim includes allegations that Seller was negligent regarding the design or manufacture of the goods.

Buyer must notify Seller in writing before using Seller's Products in Life Support Applications. Seller will study with Buyer alternative solutions to meet Buyer application specification based on Sellers sales conditions applicable for the new proposed specific part.

ENTEGRECİ

Bu belge www.entegreci.com üzerinden sunulmaktadır.

Elektronik komponent tedarikinde Entegreci

Entegreci, Eskişehir merkezli, Türkiye geneline satış yapan bir elektronik komponent mağazasıdır. Entegreler (IC), mikrodenetleyiciler, transistörler, diyotlar, pasif elemanlar, konnektörler, modüller ve geliştirme kartları tek adetten seri üretim adetlerine kadar satılır. Ürün sayfalarında güncel stok durumunu, fiyatı ve datasheet bağlantısını bulabilirsiniz.

Parça koduyla arama

Üretici parça numarasını yazın; stok ve fiyatı hemen görün.

www.entegreci.com

Ürün kategorileri

Entegreden kapasitöre tüm elektronik komponent kategorileri.

Kategorilere göz atın

Üreticiler

Aradığınız üreticinin ürünlerini tek sayfada inceleyin.

Üreticileri görün

Toplu alım ve teklif

Listede olmayan ya da yüksek adetli parçalar için teklif isteyin.

Teklif isteyin

www.entegreci.com | **destek@entegreci.com** | **0850 305 90 34**

Entegreci is an online electronic components store based in Türkiye. Search by manufacturer part number to see stock, prices and datasheets for integrated circuits, microcontrollers, transistors, passive components and connectors, or request a quote for parts that are not listed.

Bu sayfa Entegreci tarafından eklenmiştir. Belgenin önceki sayfaları asıl yayıncısına aittir ve içeriği değiştirilmemiştir; en güncel sürüm için belgenin yayıncısına başvurun.