SINGLE-CHIP SOLUTION FOR 1-CELL Li+ BATTERY PACK

Description

The AP9214L is a single-chip protection solution specially designed for 1-cell Li+ rechargeable battery pack application.

The AP9214L includes a 1-cell Lion battery protection chip and dual N-CH, ultra-low $R_{SS(ON)}$ MOSFET with common drain.

The AP9214L provides rich battery protection features and can turn off the N-CH MOSFET by detecting overcharge voltage/current, overdischarge voltage/current, or load short circuit. The AP9214L has built-in fixed delay time to save external components.

The AP9214L is available in U-DFN2535-6 (Type B) package with two kinds of pin options.

Features

- High Voltage CMOS Process, up to 30V (V_{DD} to V_M)
- Low Quiescent Current (+25°C)
  - In Normal Mode, 3.0μA (typ), 4.5μA (max), V_{DD} = 3.5V
  - In Power-Down Mode, 0.1μA (max)
- High-Accuracy Voltage Detection Circuit (+25°C)
  - Overcharge Detection Voltage: 3.5V to 4.5V (5mV Steps) Accuracy ±25mV
  - Overcharge Hysteresis Voltage Range: 0.1V to 0.4V (50mV Steps) Accuracy ±50mV
  - Overdischarge Detection Voltage: 2.0V to 3.4V (10mV Steps) Accuracy ±35mV
  - Overdischarge Hysteresis Voltage Range: 0V to 0.7V (40mV Steps) Accuracy ±65mV
  - Discharge Overcurrent Detection Voltage: 0.05V to 0.32V (10mV Steps) Accuracy ±15mV
  - Short Current Detection Voltage: 0.45V to 0.7V (50mV Steps) Accuracy ±100mV
  - Charge Overcurrent Detection Voltage: -0.2V to -0.05V (10mV Steps) Accuracy ±15mV
  - Overcharger Detection Voltage: 8.0V (Fixed) Accuracy ±2V
  - Overcharger Release Voltage: 7.3V (Fixed) Accuracy ±2V
- Built-In Fixed Detection Delay Time (+25°C), Accuracy ±20%
- Power-Down Mode Selectable (Yes or No)
- 0V Battery Charge Selectable (Permission or Inhibition)
- Overcharge Protection Mode Selectable (Auto Release or Latch)
- **Totally Lead-Free & Fully RoHS Compliant (Notes 1 & 2)**
- **Halogen and Antimony Free. "Green" Device (Note 3)**
- **For automotive applications requiring specific change control (i.e. parts qualified to AEC-Q100/101/104/200, PPAP capable, and manufactured in IATF 16949 certified facilities), please contact us or your local Diodes representative. https://www.diodes.com/quality/product-definitions/**

Pin Assignments

(Top View)

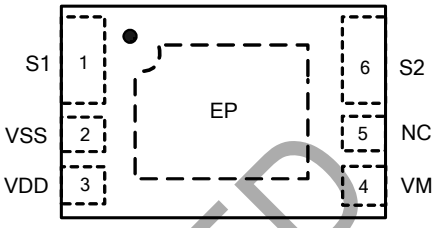

U-DFN2535-6 (Type B) (Option 1)

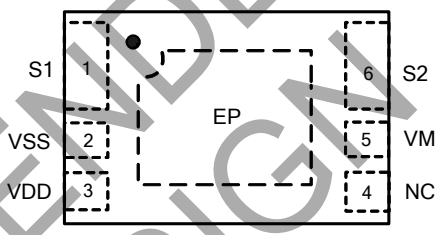

U-DFN2535-6 (Type B) (Option 2)

Applications

- Li+ rechargeable battery packs

NOT RECOMMENDED FOR NEW DESIGN

Notes: 1. No purposely added lead. Fully EU Directive 2002/95/EC (RoHS), 2011/65/EU (RoHS 2) & 2015/863/EU (RoHS 3) compliant.
2. See https://www.diodes.com/quality/lead-free/ for more information about Diodes Incorporated's definitions of Halogen- and Antimony-free, "Green" and Lead-free.
3. Halogen- and Antimony-free "Green" products are defined as those which contain <900ppm bromine, <900ppm chlorine (<1500ppm total Br + Cl) and <1000ppm antimony compounds.

© 2023 Copyright Diodes Incorporated. All Rights Reserved.

Typical Applications Circuit (Note 4)

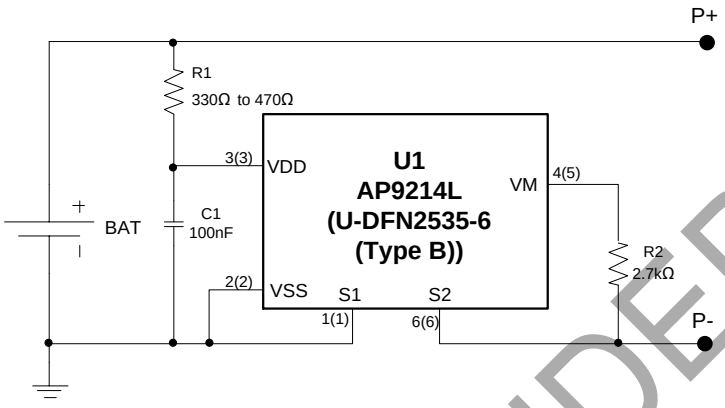

A (B)
A for Pin-out Option 1
B for Pin-out Option 2

Note: 4. R1 and C1 are used to stabilize the supply voltage of the AP9214L. The recommended range of R1 value is 330Ω to 470Ω and C1 value is 10nF to 1000nF, typical value is 100nF. R2 should be connected between P- to V_M sense terminal to monitor the status of charger and the charge/discharge current. The R2 should be between 300Ω and 4kΩ, typical value is 2.7kΩ. R1 and R2 are also used as current limit resistors if the battery or charger is connected reversely. Polarity reversing may cause the power consumption of R1 and R2 to go over their power dissipation rating, therefore R1 and R2 values should be selected appropriately for the actual application. If R2 is more than 4kΩ resistor, charge may not be off due to the voltage drop on R2.
For power-down mode, when first connecting AP9214L system board to the battery, it is necessary to use charger or to short P- to the battery negative polarity. Once the AP9214L is activated, the charger or connection can be removed. Otherwise, the battery cannot discharge current through system board.
The values selected should follow the recommended typical range mentioned above. It has not been confirmed whether the operation is normal or not in circuits other than the above example of connection. In addition, the example of connection shown above and the typical value do not exactly guarantee proper operation. Please perform the actual application to set the suitable value through your complete evaluation.

Pin Descriptions

Pin Number Option 1	Pin Number Option 2	Pin Name	Function
1	1	S1	Source pin of discharging MOSFET, connecting this pin to battery negative pole.
2	2	VSS	Negative power supply pin.
3	3	VDD	Positive power supply pin, connecting this pin to battery positive pole through R1.
4	5	VM	Charger negative input pin, short this pin to S2 pin through R2.
5	4	NC	Not connected, leave this pin floating.
6	6	S2	Source pin of charging MOSFET, connecting this pin to charge negative input.
EP	EP	Drain	Thermal PAD is common drain of charge and discharge MOSFET, so in PCB layout, prefer to use large copper area to cover this pad for better thermal dissipation, then leave it open.

NOT RECOMMENDED FOR NEW DESIGN

© 2023 Copyright Diodes Incorporated. All Rights Reserved.

Functional Block Diagram

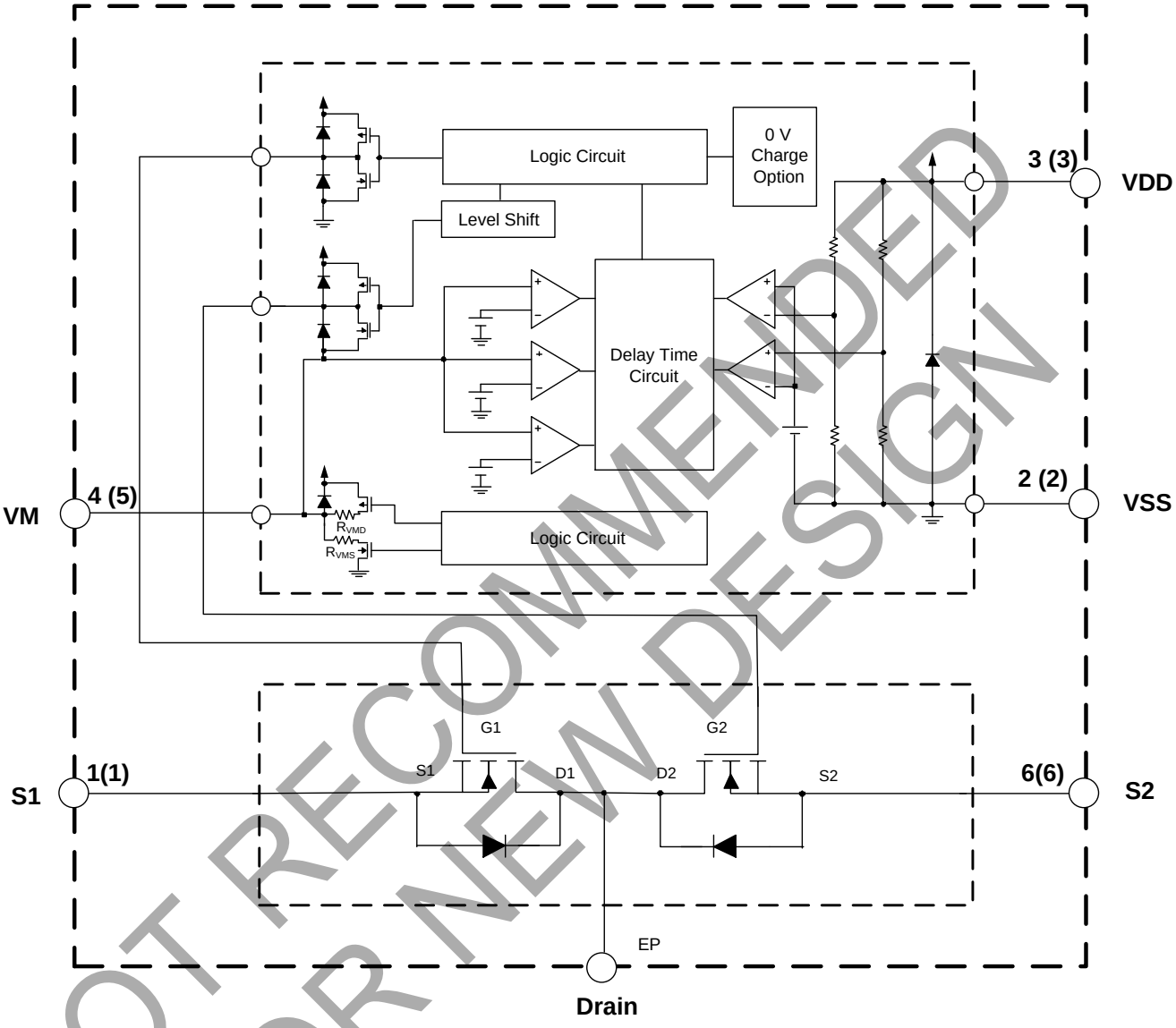

A (B)
A for Pin-out Option 1
B for Pin-out Option 2

NOT RECOMMENDED FOR NEW DESIGN

© 2023 Copyright Diodes Incorporated. All Rights Reserved.

Absolute Maximum Ratings (Notes 5 & 6)

Symbol	Parameter	Ratings	Unit
V_{DS}	Supply Voltage (Between V_{DD} and V_{SS})	-0.3 to 12	V
V_{DM}	Charge Input Voltage (Between V_{DD} and V_M for Protection Chip)	-0.3 to 24	V
V_{DSS}	MOSFET Drain-to-Source Voltage	24	V
V_{GSS}	MOSFET Gate-to-Source Voltage	±12	V
I_D	Continuous Drain Current, V_{GS} = 4.5V, T_A = +25°C	9.0	A
	Continuous Drain Current, V_{GS} = 4.5V, T_A = +70°C	7.1	A
P_D	Power Dissipation	1000	mW
T_J	Maximum Junction Temperature	+150	°C
T_{STG}	Storage Temperature Range	-65 to +150	°C

Notes: 5. Stresses beyond those listed under *Absolute Maximum Ratings* can cause permanent damage to the device. These are stress ratings only and functional operation of the device at these conditions is not implied. Exposure to absolute-maximum-rated conditions for extended periods can affect device reliability.

6. Ratings apply to ambient temperature at +25°C. The JEDEC High-K board design used to derive this data was a 2inch × 2inch multilayer board with 2ounce internal power and ground planes and 2ounce copper traces on the top and bottom of the board.

Recommended Operating Conditions

Symbol	Parameter	Min	Max	Unit
V_{DS}	Supply Voltage (Between V_{DD} and V_{SS})	1.5	5.5	V
V_{DM}	Charge Input Voltage (Between V_{DD} and V_M)	-0.3	5.5	V
T_A	Operating Ambient Temperature	-40	+85	°C

NOT RECOMMENDED FOR NEW DESIGN

© 2023 Copyright Diodes Incorporated. All Rights Reserved.

Electrical Characteristics (T_A = +25°C, V_{DD} = 3.5V, V_{SS} = 0V, R1 = 220Ω, R2 = 1.0kΩ, C1 = 100nF, unless otherwise specified.)

Symbol	Parameter	Conditions	Min	Typ	Max	Unit
V_{CU}	Overcharge Detection Voltage	—	V_{CU} - 0.025	V_{CU}	V_{CU} + 0.025	V
V_{CL}	Overcharge Release Voltage	$V_{CL} \neq V_{CU}$	V_{CL} - 0.050	V_{CL}	V_{CL} + 0.050	V
		$V_{CL} = V_{CU}$	V_{CL} - 0.025	V_{CL}	V_{CL} + 0.025	V
V_{DL}	Overdischarge Detection Voltage	—	V_{DL} - 0.035	V_{DL}	V_{DL} + 0.035	V
V_{DU}	Overdischarge Release Voltage	$V_{DU} \neq V_{DL}$	V_{DU} - 0.100	V_{DU}	V_{DU} + 0.100	V
		$V_{DU} = V_{DL}$	V_{DU} - 0.035	V_{DU}	V_{DU} + 0.035	V
V_{DOC}	Discharge Overcurrent Detection Voltage	—	V_{DOC} -0.015	V_{DOC}	V_{DOC} +0.015	V
V_{SHORT}	Load Short Detection Voltage	—	V_{SHORT} -0.10	V_{SHORT}	V_{SHORT} +0.10	V
V_{COC}	Charge Overcurrent Detection Voltage	—	V_{COC} -0.015	V_{COC}	V_{COC} +0.015	V
I_{CC}	Current Consumption During Operation	V_{DD} = 3.5V, V_M = 0V	1.5	3.0	4.5	µA
I_{STB}	Current Consumption at Power-Down	V_{DD} = 1.8V, VM Pin Floating — Power-Down Mode	—	—	0.1	µA
		V_{DD} = 1.8V, VM Pin Floating — Without Power-Down Mode (Auto-Wake-Up)	—	—	5.5	µA
R_{VMD}	Resistance Between VM Pin and VDD Pin	V_{DD} = 1.8V, V_M = 0V	150	300	500	kΩ
R_{VMS}	Resistance Between VM Pin and VSS Pin	V_{DD} = 3.5V, V_M = 1.0V	10	30	50	kΩ
V_{0CHA}	0V Battery Charge Starting Charge Voltage	0V Battery Charging “Available”	1.2	—	—	V
V_{0INH}	0V Battery Charge Inhibition Battery Voltage	0V Battery Charging “Unavailable”	—	—	0.45	V
V_{OVCHG}	Overvoltage Charge Detection Voltage	V_{DD} = 3.5V	6.0	8.0	10.0	V
V_{OVCHGR}	Overvoltage Charge Release Voltage	V_{DD} = 3.5V	5.3	7.3	9.3	V
t_{CU}	Overcharge Detection Delay Time	—	t_{CU} * 0.8	t_{CU}	t_{CU} * 1.2	ms
t_{CUR}	Overcharge Release Delay Time	—	t_{CUR} * 0.8	t_{CUR}	t_{CUR} * 1.2	ms
t_{DL}	Overdischarge Detection Delay Time	—	t_{DL} * 0.8	t_{DL}	t_{DL} * 1.2	ms
t_{DLR}	Overdischarge Release Delay Time	—	t_{DLR} * 0.8	t_{DLR}	t_{DLR} * 1.2	ms
t_{DOC}	Discharge Overcurrent Detection Delay Time	—	t_{DOC} * 0.8	t_{DOC}	t_{DOC} * 1.2	ms
t_{DOCR}	Discharge Overcurrent Release Delay Time	—	t_{DOCR} * 0.8	t_{DOCR}	t_{DOCR} * 1.2	ms
t_{SHORT}	Load Short Detection Delay Time	—	t_{SHORT} * 0.8	t_{SHORT}	t_{SHORT} * 1.2	µs
t_{COC}	Charge Overcurrent Detection Delay Time	—	t_{COC} * 0.8	t_{COC}	t_{COC} * 1.2	ms
t_{COCR}	Charge Overcurrent Release Delay Time	—	t_{COCR} * 0.8	t_{COCR}	t_{COCR} * 1.2	ms

NOT RECOMMENDED FOR NEW DESIGN

© 2023 Copyright Diodes Incorporated. All Rights Reserved.

Electrical Characteristics (continued) (T_A = -40°C to +85°C, V_{DD} = 3.5V, V_{SS} = 0V, R1 = 220Ω, R2 = 1.0kΩ, C1 = 100nF, unless otherwise specified.)

Symbol	Parameter	Conditions	Min	Typ	Max	Unit
V_{CU}	Overcharge Detection Voltage	—	V_{CU} - 0.060	V_{CU}	V_{CU} + 0.040	V
V_{CL}	Overcharge Release Voltage	$V_{CL} \neq V_{CU}$	V_{CL} - 0.080	V_{CL}	V_{CL} + 0.065	V
		$V_{CL} = V_{CU}$	V_{CL} - 0.060	V_{CL}	V_{CL} + 0.040	V
V_{DL}	Overdischarge Detection Voltage	—	V_{DL} - 0.080	V_{DL}	V_{DL} + 0.080	V
V_{DU}	Overdischarge Release Voltage	$V_{DU} \neq V_{DL}$	V_{DU} - 0.150	V_{DU}	V_{DU} + 0.190	V
		$V_{DU} = V_{DL}$	V_{DU} - 0.080	V_{DU}	V_{DU} + 0.080	V
V_{DOC}	Discharge Overcurrent Detection Voltage	—	V_{DOC} -0.021	V_{DOC}	V_{DOC} +0.024	V
V_{SHORT}	Load Short Detection Voltage	—	V_{SHORT} -0.34	V_{SHORT}	V_{SHORT} +0.34	V
V_{COC}	Charge Overcurrent Detection Voltage	—	V_{COC} -0.040	V_{COC}	V_{COC} +0.040	V
I_{CC}	Current Consumption During Operation	V_{DD} = 3.5V, V_M = 0V	1.0	3.0	7.0	µA
I_{STB}	Current Consumption at Power-Down	V_{DD} =1.8V, VM Pin Floating — Power-Down Mode	—	—	1.0	µA
		V_{DD} =1.8V, VM Pin Floating — Without Power-Down Mode (Auto-Wake-Up)	—	—	8	µA
R_{VMD}	Resistance Between VM Pin and VDD Pin	V_{DD} = 1.8V, V_M = 0V	100	300	650	kΩ
R_{VMS}	Resistance Between VM Pin and VSS Pin	V_{DD} = 3.5V, V_M = 1.0V	5	30	65	kΩ
V_{0CHA}	0V Battery Charge Starting Charge Voltage	0V Battery Charging “Available”	1.2	—	—	V
V_{0INH}	0V Battery Charge Inhibition Battery Voltage	0V Battery Charging “Unavailable”	—	—	0.3	V
V_{OVCHG}	Overvoltage Charge Detection Voltage	V_{DD} = 3.5V	5.5	8.0	10.5	V
V_{OVCHGR}	Overvoltage Charge Release Voltage	V_{DD} = 3.5V	5.0	7.3	9.5	V
t_{CU}	Overcharge Detection Delay Time	—	t_{CU} * 0.6	t_{CU}	t_{CU} * 1.4	ms
t_{CUR}	Overcharge Release Delay Time	—	t_{CUR} * 0.6	t_{CUR}	t_{CUR} * 1.4	ms
t_{DL}	Overdischarge Detection Delay Time	—	t_{DL} * 0.6	t_{DL}	t_{DL} * 1.4	ms
t_{DLR}	Overdischarge Release Delay Time	—	t_{DLR} * 0.6	t_{DLR}	t_{DLR} * 1.4	ms
t_{DOC}	Discharge Overcurrent Detection Delay Time	—	t_{DOC} * 0.6	t_{DOC}	t_{DOC} * 1.4	ms
t_{DOCR}	Discharge Overcurrent Release Delay Time	—	t_{DOCR} * 0.6	t_{DOCR}	t_{DOCR} * 1.4	ms
t_{SHORT}	Load Short Detection Delay Time	—	t_{SHORT} * 0.6	t_{SHORT}	t_{SHORT} * 1.4	µs
t_{COC}	Charge Overcurrent Detection Delay Time	—	t_{COC} * 0.6	t_{COC}	t_{COC} * 1.4	ms
t_{COCR}	Charge Overcurrent Release Delay Time	—	t_{COCR} * 0.6	t_{COCR}	t_{COCR} * 1.4	ms

NOT RECOMMENDED FOR NEW DESIGN

© 2023 Copyright Diodes Incorporated. All Rights Reserved.

Electrical Characteristics (continued) (Notes 7, 8) (T_A = +25°C, V_{DD} = 3.5V, V_{SS} = 0V, R1 = 220Ω, R2 = 1.0kΩ, C1 = 100nF, unless otherwise specified.)

Symbol	Parameter	Conditions	Min	Typ	Max	Unit
I_{DSS}	Zero Gate Voltage Drain Current	V_{DS} = 20V, V_{GS} = 0	—	—	1.0	μA
$R_{SS(ON)1}$	Static Source-Source On-Resistance 1	V_{DD} = 4.0V, I_D = 1.0A	10	13	16	mΩ
$R_{SS(ON)2}$	Static Source-Source On-Resistance 2	V_{DD} = 3.9V, I_D = 1.0A	10	13.5	16.5	mΩ
$R_{SS(ON)3}$	Static Source-Source On-Resistance 3	V_{DD} = 3.0V, I_D = 1.0A	11	14	17	mΩ
V_{SD}	Diode Forward Voltage	V_{GS} = 0V, I_S = 1A	—	0.75	1.0	V

Notes: 7. In case of Gate-Source voltage of charging MOSFET is 0V. In case of Gate-Source voltage of discharging MOSFET is 0V.
8. These specifications are guaranteed by design - will not be tested in production.

NOT RECOMMENDED FOR NEW DESIGN

© 2023 Copyright Diodes Incorporated. All Rights Reserved.

Application Information

Operation Mode

1. Normal Status

The AP9214L monitors the battery voltage between the VDD pin and VSS pin as well as the voltage difference between the VM pin and VSS pin to control battery charging and discharging. When the battery voltage is between overdischarge detection voltage (V_{DL}) and overcharge detection voltage (V_{CU}) as well as the VM pin voltage is between the charge overcurrent detection voltage (V_{COC}) and discharge overcurrent detection voltage (V_{DOC}), the AP9214L will turn on discharging and charging MOSFET. In these conditions, the battery can charge and discharge freely. Also, R_{VMD} does not connect to VDD pin and R_{VMS} does not connect to VSS pin in this status.

2. Overcharge Status

If the battery voltage is more than V_{CU} during charging status for the overcharge detection delay time (t_{CU}) or longer, the AP9214L turns off the charging MOSFET to stop charging. R_{VMD} and R_{VMS} are not connected in overcharge status.

When VM pin voltage is lower than V_{DOC} and battery voltage falls below V_{CL}, the AP9214L will release from overcharge status.

When VM pin voltage is equal or more than V_{DOC} and battery voltage falls below V_{CU}, the AP9214L will release from overcharge status.

3. Overdischarge Status

If the battery voltage is less than V_{DL} during discharging status for the overdischarge detection delay time (t_{DL}) or longer, the AP9214L turns off the discharging MOSFET to stop discharging. In overdischarge status, R_{VMD} is connected to VDD and VM pin voltage is pulled up to VDD by R_{VMD}, but R_{VMS} is not connected.

For power-down mode version, the AP9214L recovers normal status from overdischarge status only by charging the battery through the charger.

When VM pin voltage to VSS pin voltage is less than typical -0.7V and the battery voltage rises over V_{DL}, the AP9214L will release from overdischarge status. If VM pin voltage to VSS pin voltage is higher than typical -0.7V, the AP9214L will release from overdischarge status until the battery voltage rises over V_{DU}.

For auto-wake-up version AP9214LA, the device recovers to normal status from overdischarge status if either of these two conditions are satisfied:

If charger is connected: the AP9214LA overdischarge status is released in the same way as described above in AP9214L overdischarge status section.

If no charger is connected: 1) The battery voltage reaches the overdischarge release voltage (V_{DU}) or higher;
2) Maintains continuous time more than overdischarge release delay time t_{DLR}.

4. Discharge Overcurrent and Short Current Status

When battery is in discharge overcurrent status, if the voltage of the VM pin to VSS pin is equal or more than V_{DOC} to V_{SHORT} and detection lasts for the discharge overcurrent detection delay time (t_{DOC}) or longer, the AP9214L turns off the discharging MOSFET to stop discharging.

When the battery is in short current status, if the voltage of the VM pin to VSS pin is equal to or more than V_{SHORT}, and the detection lasts for the short current detection delay time or longer, the AP9214L turns off the discharge MOSFET to stop discharging.

In discharge overcurrent or short current status, R_{VMS} is connected to VSS but R_{VMD} is not connected. The voltage of VM pin is almost equal to V_{DD} as long as the load is connected. When the load is disconnected, the voltage of VM pin will become almost equal to VSS (due to R_{VMS} being connected) and then the AP9214L will release from discharge overcurrent or short current status.

5. Charge Overcurrent Status

When the battery is in charge overcurrent status, if the voltage of the VM pin to VSS pin is equal to or less than V_{COC} and the detection continues for the charge overcurrent detection delay time (t_{COC}) or longer, the AP9214L turns off the charging MOSFET to stop charging.

6. 0V Battery Charging Function (Optional)

This function is available as an option and can be factory set internally. The AP9214L has this function built in.

0V charging function permits charger to recharge the battery whose voltage is 0V due to self-discharge. If 0V charging function is not present, the device will prevent charger to recharge the battery whose voltage is 0V due to self-discharge. (If a device without 0V charging function is needed, please contact Diodes Incorporated's sales team.)

NOT RECOMMENDED FOR NEW DESIGN

© 2023 Copyright Diodes Incorporated. All Rights Reserved.

Application Information (continued)

7. Overvoltage Charger Detection Circuit

This function is used to monitor the charger voltage between the VDD pin and VM pin, and when this voltage exceeds overvoltage charger detection voltage (8.0V typ), the AP9214L will turn off charging MOSFET, when this voltage drops below overvoltage charger release voltage (7.3V typ), it then turns on charging MOSFET. There is no delay time setting for detection and release.

8. Power-Down Mode or Auto-Wake-Up Function (Optional)

In device with power-down function, during power-down mode, device enters the overdischarge status. The IC enters sleep mode and the current consumption becomes very low, typically 0.1μA. To release from power-down status to the normal status, charger connection is required.

In device with auto-wake-up mode, the IC remains active in the overdischarge state. The IC is released into the normal state by the operation that increases the battery voltage more than overdischarge release voltage.

NOT RECOMMENDED FOR NEW DESIGN

© 2023 Copyright Diodes Incorporated. All Rights Reserved.

Application Information (Timing Chart)

1. Overcharge and Overdischarge Detection

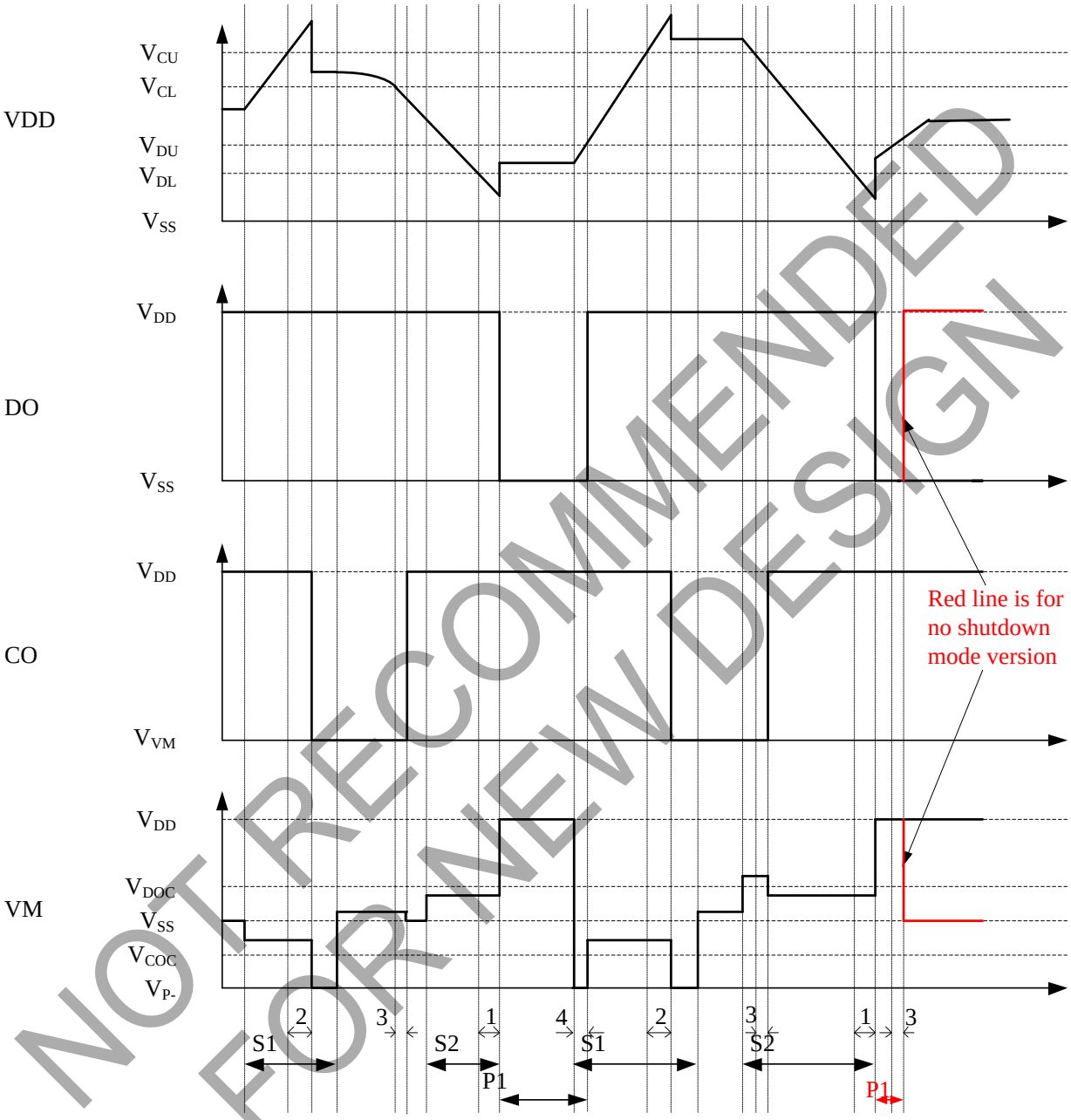

NOT RECOMMENDED FOR NEW DESIGN

1: t_{DL}
2: t_{CU}
3: t_{CUR}
4: t_{DLR}

S1: Charger connection
S2: Load connection
P1: R_{VMD} pullup connection

© 2023 Copyright Diodes Incorporated. All Rights Reserved.

Application Information (Timing Chart) (continued)

2. Discharge Overcurrent Detection

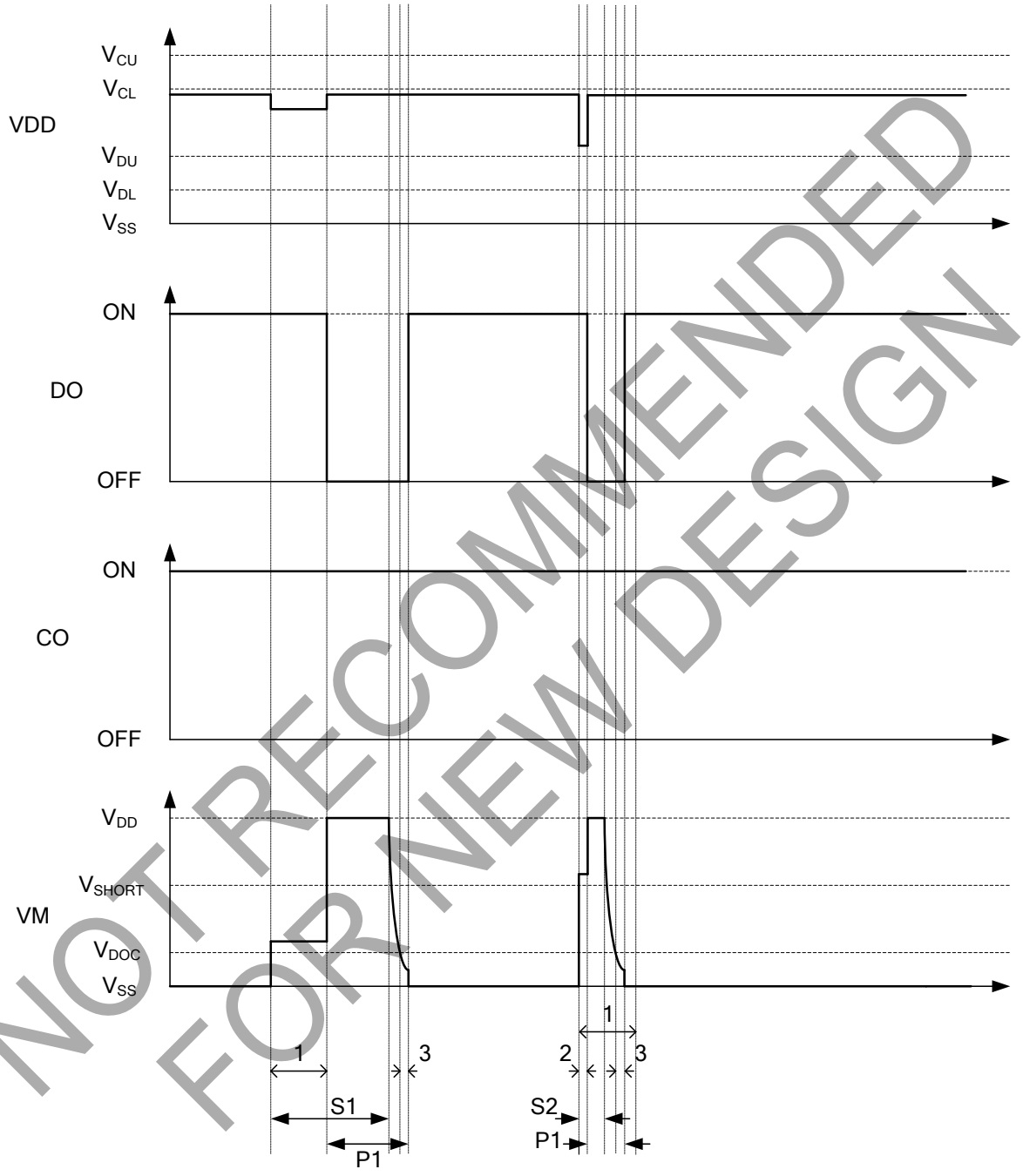

1: t_{DOC}
2: t_{SHORT}
3: t_{DOCR}

S1: Connect overcurrent load
S2: Connect short current load
P1: R_{VMS} pulldown connection

NOT RECOMMENDED FOR NEW DESIGN

© 2023 Copyright Diodes Incorporated. All Rights Reserved.

Application Information (Timing Chart) (continued)

3. Charge Overcurrent Detection

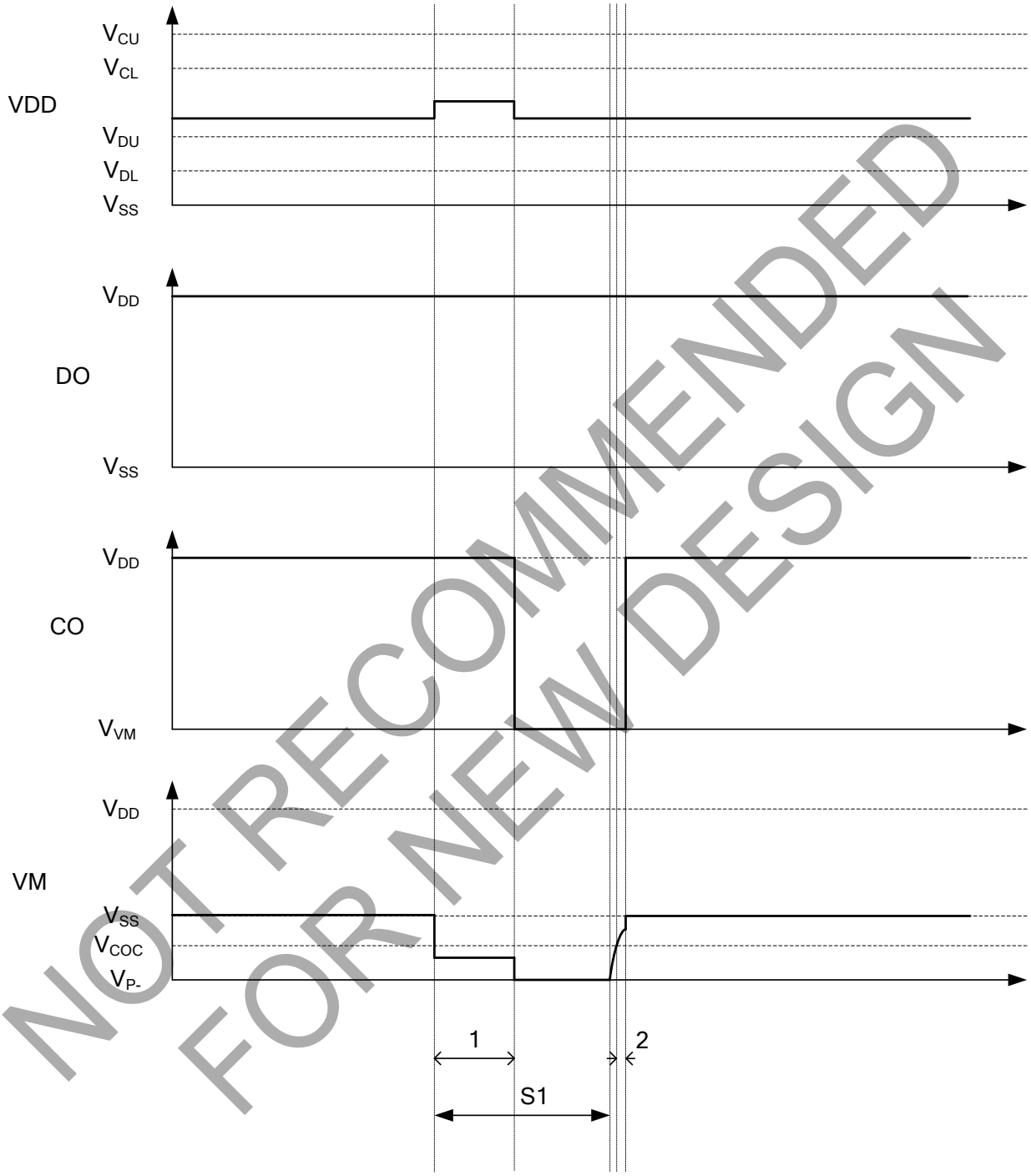

1: t_{COC}
2: t_{COCR}

S1: Connect overcurrent charger

NOT RECOMMENDED FOR NEW DESIGN

© 2023 Copyright Diodes Incorporated. All Rights Reserved.

Ordering Information (Note 9)

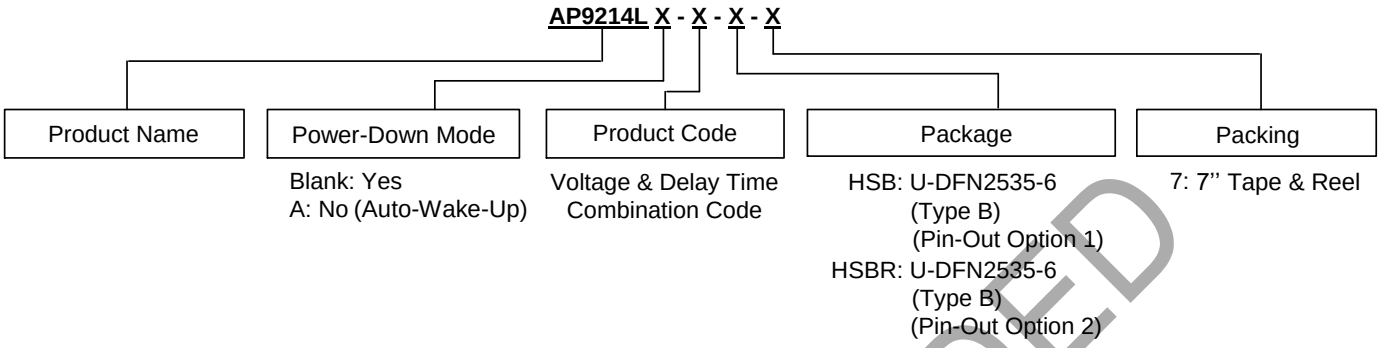

Part Number	Package Code	Package	Pin Out	Packing	
				Qty.	Carrier
AP9214L(X)-X-HSB-7	HSB	U-DFN2535-6 (Type B)	Option 1	3000	7'' Tape & Reel
AP9214L(X)-X-HSBR-7	HSBR	U-DFN2535-6 (Type B)	Option 2	3000	7'' Tape & Reel

Voltage Combination

Part Number	Overcharge Detection Voltage V_{CU}	Overcharge Release Voltage V_{CL}	Overdischarge Detection Voltage V_{DL}	Overdischarge Release Voltage V_{DU}	Discharge Overcurrent Detection Voltage V_{DOC}	Load Short Detection Voltage V_{SHORT}	Charge Overurrent Detection Voltage V_{COC}	Over Voltage Charger Detection Voltage V_{OVCHG}	Over Voltage Charger Release Voltage V_{OVCHGR}	Power-Down Function	Overcharge Protection Mode	Delay Time	0V Battery Charge Function
AP9214L(X)-AA-HSB(X)-7	4.375V	4.175V	2.500V	2.900V	0.150V	0.700V	-0.150V	8.0V	7.3V	Selectable	Auto Release	Option 1	Permission
AP9214L(X)-AB-HSB(X)-7	4.425V	4.225V	2.500V	2.900V	0.150V	0.700V	-0.150V	8.0V	7.3V	Selectable	Auto Release	Option 1	Permission
AP9214L(X)-AC-HSB(X)-7	4.375V	4.175V	2.500V	2.900V	0.095V	0.700V	-0.095V	8.0V	7.3V	Selectable	Auto Release	Option 1	Permission
AP9214L(X)-AD-HSB(X)-7	4.375V	4.175V	2.500V	2.900V	0.120V	0.700V	-0.120V	8.0V	7.3V	Selectable	Auto Release	Option 1	Permission
AP9214L(X)-AE-HSB(X)-7	4.200V	4.100V	2.500V	3.000V	0.300V	0.550V	-0.100V	8.0V	7.3V	Selectable	Auto Release	Option 1	Permission
AP9214L(X)-AF-HSB(X)-7	4.375V	4.175V	2.500V	2.900V	0.180V	0.700V	-0.180V	8.0V	7.3V	Selectable	Auto Release	Option 1	Permission
AP9214L(X)-AG-HSB(X)-7	4.375V	4.175V	2.500V	2.900V	0.075V	0.700V	-0.075V	8.0V	7.3V	Selectable	Auto Release	Option 1	Permission
AP9214L(X)-AH-HSB(X)-7	4.425V	4.225V	2.500V	2.900V	0.075V	0.700V	-0.075V	8.0V	7.3V	Selectable	Auto Release	Option 1	Permission
AP9214L(X)-AI-HSB(X)-7	4.500V	4.300V	2.400V	2.800V	0.150V	0.700V	-0.075V	8.0V	7.3V	Selectable	Auto Release	Option 1	Permission
AP9214L(X)-AJ-HSB(X)-7	4.375V	4.175V	2.400V	2.800V	0.125V	0.700V	-0.125V	8.0V	7.3V	Selectable	Auto Release	Option 1	Permission
AP9214L(X)-AK-HSB(X)-7	4.250V	4.050V	2.400V	3.000V	0.150V	0.700V	-0.150V	8.0V	7.3V	Selectable	Auto Release	Option 1	Permission
AP9214L(X)-AL-HSB(X)-7	4.275V	4.175V	2.300V	2.400V	0.180V	0.700V	-0.180V	8.0V	7.3V	Selectable	Auto Release	Option 1	Permission
AP9214L(X)-AM-HSB(X)-7	4.375V	4.175V	2.300V	2.400V	0.180V	0.700V	-0.180V	8.0V	7.3V	Selectable	Auto Release	Option 1	Permission
AP9214L(X)-AN-HSB(X)-7	4.225V	4.025V	3.200V	3.400V	0.060V	0.450V	-0.060V	8.0V	7.3V	Selectable	Auto Release	Option 1	Permission
AP9214L(X)-BA-HSB(X)-7	4.240V	4.140V	3.000V	3.100V	0.081V	0.700V	-0.081V	8.0V	7.3V	Selectable	Auto Release	Option 1	Permission
AP9214L(X)-DL-HSB(X)-7	4.275V	4.175V	2.300V	2.400V	0.180V	0.700V	-0.180V	8.0V	7.3V	Selectable	Auto Release	Option 1	Prohibition

Note: 9. If products of any other voltage versions are needed, please contact with the local sales' office.

NOT RECOMMENDED FOR NEW DESIGN

© 2023 Copyright Diodes Incorporated. All Rights Reserved.

Ordering Information (continued) (Note 9)

Delay Time Combination

Part Number	Overcharge Detection Delay Time t_{CU}	Overcharge Release Delay Time t_{CUR}	Overdischarge Detection Delay Time t_{DL}	Overdischarge Release Delay Time t_{DLR}	Discharge Overcurrent Detection Delay Time t_{DOC}	Discharge Overcurrent Release Delay Time t_{DOCR}	Charge Overcurrent Detection Delay Time t_{COC}	Charge Overcurrent Release Delay Time t_{COCR}	Load Short Detection Delay Time t_{SHORT}
AP9214L(X)-XX-HSB(X)-7	1.0s	2.0ms	115ms	2.0ms	10.0ms	2.0ms	10.0ms	2.0ms	320µs

Note: 9. If products of any other voltage versions are needed, please contact with the local sales' office.

Marking Information

(Top View)

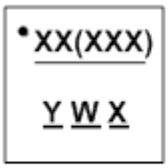

XX(XXX) : Identification Code (2~5 Codes)
Y : Year : 0 to 9
W : Week : A to Z : 1 to 26 week; a to z : 27 to 52 week; z represents 52 and 53 week
X : Internal Code

NOT RECOMMENDED FOR NEW DESIGN

© 2023 Copyright Diodes Incorporated. All Rights Reserved.

Marking Information (continued)

Part Number	Package	Identification Code
AP9214LA-AA-HSB-7	U-DFN2535-6 (Type B)	14AA
AP9214LA-AB-HSB-7	U-DFN2535-6 (Type B)	14AB
AP9214LA-AC-HSB-7	U-DFN2535-6 (Type B)	14AC
AP9214LA-AD-HSB-7	U-DFN2535-6 (Type B)	14AD
AP9214LA-AE-HSB-7	U-DFN2535-6 (Type B)	14AE
AP9214LA-AF-HSB-7	U-DFN2535-6 (Type B)	14AF
AP9214LA-AG-HSB-7	U-DFN2535-6 (Type B)	S6
AP9214LA-AH-HSB-7	U-DFN2535-6 (Type B)	S8
AP9214LA-AI-HSB-7	U-DFN2535-6 (Type B)	14AI
AP9214LA-AJ-HSB-7	U-DFN2535-6 (Type B)	14AJ
AP9214LA-AK-HSB-7	U-DFN2535-6 (Type B)	14AK
AP9214LA-AL-HSB-7	U-DFN2535-6 (Type B)	14AL
AP9214LA-AM-HSB-7	U-DFN2535-6 (Type B)	14AM
AP9214LA-AN-HSB-7	U-DFN2535-6 (Type B)	14AN
AP9214LA-BA-HSB-7	U-DFN2535-6 (Type B)	14BA
AP9214LA-DL-HSB-7	U-DFN2535-6 (Type B)	14ADL
AP9214LA-AA-HSBR-7	U-DFN2535-6 (Type B)	14AAR
AP9214LA-AB-HSBR-7	U-DFN2535-6 (Type B)	14ABR
AP9214LA-AC-HSBR-7	U-DFN2535-6 (Type B)	14ACR
AP9214LA-AD-HSBR-7	U-DFN2535-6 (Type B)	14ADR
AP9214LA-AE-HSBR-7	U-DFN2535-6 (Type B)	14AER
AP9214LA-AF-HSBR-7	U-DFN2535-6 (Type B)	14AFR
AP9214LA-AG-HSBR-7	U-DFN2535-6 (Type B)	R7
AP9214LA-AH-HSBR-7	U-DFN2535-6 (Type B)	RH
AP9214LA-AI-HSBR-7	U-DFN2535-6 (Type B)	14AIR
AP9214LA-AJ-HSBR-7	U-DFN2535-6 (Type B)	14AJR
AP9214LA-AK-HSBR-7	U-DFN2535-6 (Type B)	14AKR
AP9214LA-AL-HSBR-7	U-DFN2535-6 (Type B)	14ALR
AP9214LA-AM-HSBR-7	U-DFN2535-6 (Type B)	14AMR
AP9214LA-AN-HSBR-7	U-DFN2535-6 (Type B)	14ANR
AP9214LA-BA-HSBR-7	U-DFN2535-6 (Type B)	14BAR
AP9214LA-DL-HSBR-7	U-DFN2535-6 (Type B)	14ADLR
AP9214L-AA-HSB-7	U-DFN2535-6 (Type B)	14A
AP9214L-AB-HSB-7	U-DFN2535-6 (Type B)	14B
AP9214L-AC-HSB-7	U-DFN2535-6 (Type B)	14C
AP9214L-AD-HSB-7	U-DFN2535-6 (Type B)	14D
AP9214L-AE-HSB-7	U-DFN2535-6 (Type B)	14E
AP9214L-AF-HSB-7	U-DFN2535-6 (Type B)	14F
AP9214L-AG-HSB-7	U-DFN2535-6 (Type B)	X8
AP9214L-AH-HSB-7	U-DFN2535-6 (Type B)	X9
AP9214L-AI-HSB-7	U-DFN2535-6 (Type B)	14I
AP9214L-AJ-HSB-7	U-DFN2535-6 (Type B)	14J
AP9214L-AK-HSB-7	U-DFN2535-6 (Type B)	14K
AP9214L-AL-HSB-7	U-DFN2535-6 (Type B)	14L
AP9214L-AM-HSB-7	U-DFN2535-6 (Type B)	14M
AP9214L-AN-HSB-7	U-DFN2535-6 (Type B)	14N
AP9214L-DL-HSB-7	U-DFN2535-6 (Type B)	14DL
AP9214L-AA-HSBR-7	U-DFN2535-6 (Type B)	14AR
AP9214L-AB-HSBR-7	U-DFN2535-6 (Type B)	14BR
AP9214L-AC-HSBR-7	U-DFN2535-6 (Type B)	14CR
AP9214L-AD-HSBR-7	U-DFN2535-6 (Type B)	14DR
AP9214L-AE-HSBR-7	U-DFN2535-6 (Type B)	14ER
AP9214L-AF-HSBR-7	U-DFN2535-6 (Type B)	14FR
AP9214L-AG-HSBR-7	U-DFN2535-6 (Type B)	14GR
AP9214L-AH-HSBR-7	U-DFN2535-6 (Type B)	14HR
AP9214L-AI-HSBR-7	U-DFN2535-6 (Type B)	14IR
AP9214L-AJ-HSBR-7	U-DFN2535-6 (Type B)	14JR
AP9214L-AK-HSBR-7	U-DFN2535-6 (Type B)	14KR
AP9214L-AL-HSBR-7	U-DFN2535-6 (Type B)	14LR
AP9214L-AM-HSBR-7	U-DFN2535-6 (Type B)	14MR
AP9214L-AN-HSBR-7	U-DFN2535-6 (Type B)	14NR
AP9214L-DL-HSBR-7	U-DFN2535-6 (Type B)	14DLR

NOT RECOMMENDED FOR NEW DESIGN

© 2023 Copyright Diodes Incorporated. All Rights Reserved.

Package Outline Dimensions

Please see http://www.diodes.com/package-outlines.html for the latest version.

U-DFN2535-6 (Type B)

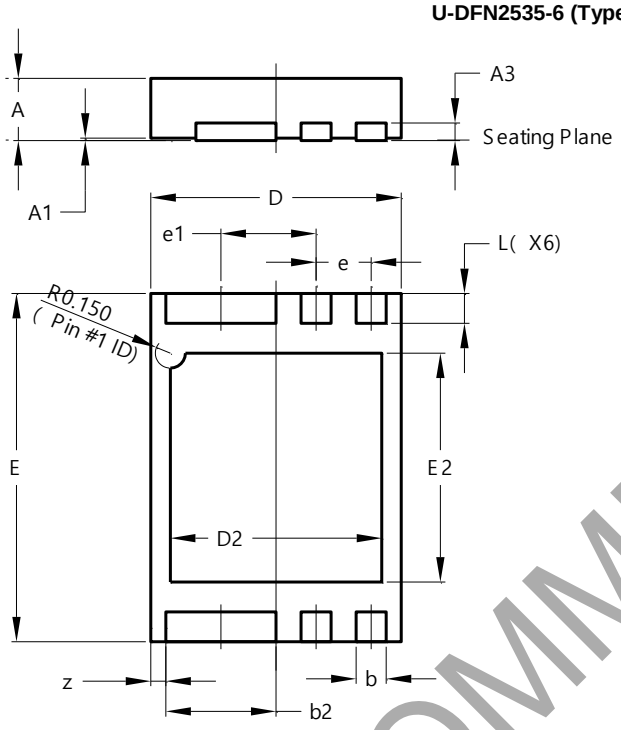

U-DFN2535-6 (Type B)			
Dim	**Min**	**Max**	**Typ**
A	0.50	0.60	-
A1	0.00	0.05	0.02
A3	-	-	0.127
b	0.25	0.35	0.30
b2	1.05	1.15	1.10
D	2.45	2.55	2.50
D2	2.01	2.21	2.11
E	3.45	3.55	3.50
E2	2.20	2.40	2.30
e	-	-	0.55
e1	-	-	0.95
L	0.25	0.35	0.30
z	-	-	0.15
All Dimensions in mm			

Suggested Pad Layout

Please see http://www.diodes.com/package-outlines.html for the latest version.

U-DFN2535-6 (Type B)

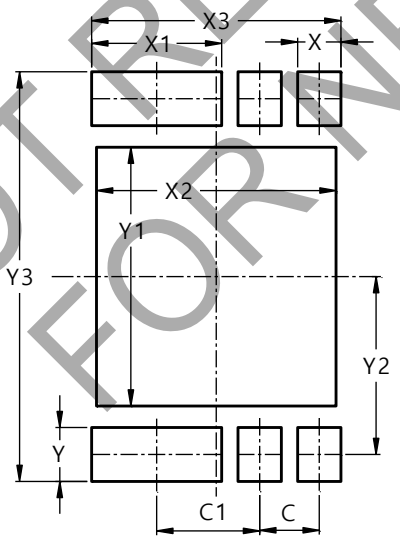

Dimensions	Value (in mm)
C	0.550
C1	0.950
X	0.400
X1	1.200
X2	2.210
X3	2.300
Y	0.500
Y1	2.400
Y2	1.650
Y3	3.800

Mechanical Data

- Moisture Sensitivity: Level 1 per J-STD-020
- Terminals: Finish - NiPdAu over Copper Leads, Solderable per MIL-STD-202, Method 208 e4
- Weight: 0.016 grams (Approximate)

NOT RECOMMENDED FOR NEW DESIGN

© 2023 Copyright Diodes Incorporated. All Rights Reserved.

IMPORTANT NOTICE

1. DIODES INCORPORATED (Diodes) AND ITS SUBSIDIARIES MAKE NO WARRANTY OF ANY KIND, EXPRESS OR IMPLIED, WITH REGARDS TO ANY INFORMATION CONTAINED IN THIS DOCUMENT, INCLUDING, BUT NOT LIMITED TO, THE IMPLIED WARRANTIES OF MERCHANTABILITY, FITNESS FOR A PARTICULAR PURPOSE OR NON-INFRINGEMENT OF THIRD PARTY INTELLECTUAL PROPERTY RIGHTS (AND THEIR EQUIVALENTS UNDER THE LAWS OF ANY JURISDICTION).

2. The Information contained herein is for informational purpose only and is provided only to illustrate the operation of Diodes' products described herein and application examples. Diodes does not assume any liability arising out of the application or use of this document or any product described herein. This document is intended for skilled and technically trained engineering customers and users who design with Diodes' products. Diodes' products may be used to facilitate safety-related applications; however, in all instances customers and users are responsible for (a) selecting the appropriate Diodes products for their applications, (b) evaluating the suitability of Diodes' products for their intended applications, (c) ensuring their applications, which incorporate Diodes' products, comply the applicable legal and regulatory requirements as well as safety and functional-safety related standards, and (d) ensuring they design with appropriate safeguards (including testing, validation, quality control techniques, redundancy, malfunction prevention, and appropriate treatment for aging degradation) to minimize the risks associated with their applications.

3. Diodes assumes no liability for any application-related information, support, assistance or feedback that may be provided by Diodes from time to time. Any customer or user of this document or products described herein will assume all risks and liabilities associated with such use, and will hold Diodes and all companies whose products are represented herein or on Diodes' websites, harmless against all damages and liabilities.

4. Products described herein may be covered by one or more United States, international or foreign patents and pending patent applications. Product names and markings noted herein may also be covered by one or more United States, international or foreign trademarks and trademark applications. Diodes does not convey any license under any of its intellectual property rights or the rights of any third parties (including third parties whose products and services may be described in this document or on Diodes' website) under this document.

5. Diodes' products are provided subject to Diodes' Standard Terms and Conditions of Sale (https://www.diodes.com/about/company/terms-and-conditions/terms-and-conditions-of-sales/) or other applicable terms. This document does not alter or expand the applicable warranties provided by Diodes. Diodes does not warrant or accept any liability whatsoever in respect of any products purchased through unauthorized sales channel.

6. Diodes' products and technology may not be used for or incorporated into any products or systems whose manufacture, use or sale is prohibited under any applicable laws and regulations. Should customers or users use Diodes' products in contravention of any applicable laws or regulations, or for any unintended or unauthorized application, customers and users will (a) be solely responsible for any damages, losses or penalties arising in connection therewith or as a result thereof, and (b) indemnify and hold Diodes and its representatives and agents harmless against any and all claims, damages, expenses, and attorney fees arising out of, directly or indirectly, any claim relating to any noncompliance with the applicable laws and regulations, as well as any unintended or unauthorized application.

7. While efforts have been made to ensure the information contained in this document is accurate, complete and current, it may contain technical inaccuracies, omissions and typographical errors. Diodes does not warrant that information contained in this document is error-free and Diodes is under no obligation to update or otherwise correct this information. Notwithstanding the foregoing, Diodes reserves the right to make modifications, enhancements, improvements, corrections or other changes without further notice to this document and any product described herein. This document is written in English but may be translated into multiple languages for reference. Only the English version of this document is the final and determinative format released by Diodes.

8. Any unauthorized copying, modification, distribution, transmission, display or other use of this document (or any portion hereof) is prohibited. Diodes assumes no responsibility for any losses incurred by the customers or users or any third parties arising from any such unauthorized use.

9. This Notice may be periodically updated with the most recent version available at https://www.diodes.com/about/company/terms-and-conditions/important-notice

The Diodes logo is a registered trademark of Diodes Incorporated in the United States and other countries.
All other trademarks are the property of their respective owners.
© 2023 Diodes Incorporated. All Rights Reserved.

www.diodes.com

NOT RECOMMENDED FOR NEW DESIGN

© 2023 Copyright Diodes Incorporated. All Rights Reserved.

ENTEGRECİ

Bu belge www.entegreci.com üzerinden sunulmaktadır.

Elektronik komponent tedarikinde Entegreci

Entegreci, Eskişehir merkezli, Türkiye geneline satış yapan bir elektronik komponent mağazasıdır. Entegreler (IC), mikrodenetleyiciler, transistörler, diyotlar, pasif elemanlar, konnektörler, modüller ve geliştirme kartları tek adetten seri üretim adetlerine kadar satılır. Ürün sayfalarında güncel stok durumunu, fiyatı ve datasheet bağlantısını bulabilirsiniz.

Parça koduyla arama

Üretici parça numarasını yazın; stok ve fiyatı hemen görün.

www.entegreci.com

Ürün kategorileri

Entegreden kapasitöre tüm elektronik komponent kategorileri.

Kategorilere göz atın

Üreticiler

Aradığınız üreticinin ürünlerini tek sayfada inceleyin.

Üreticileri görün

Toplu alım ve teklif

Listede olmayan ya da yüksek adetli parçalar için teklif isteyin.

Teklif isteyin

www.entegreci.com | **destek@entegreci.com** | **0850 305 90 34**

Entegreci is an online electronic components store based in Türkiye. Search by manufacturer part number to see stock, prices and datasheets for integrated circuits, microcontrollers, transistors, passive components and connectors, or request a quote for parts that are not listed.

Bu sayfa Entegreci tarafından eklenmiştir. Belgenin önceki sayfaları asıl yayıncısına aittir ve içeriği değiştirilmemiştir; en güncel sürüm için belgenin yayıncısına başvurun.