Description

The AP9101C is a protection IC developed for lithium-ion/lithium polymer rechargeable battery with a high-precision voltage detection circuit.

The AP9101C provides a function to protect batteries by detecting overcharge voltage, overdischarge voltage, overcharge current, overdischarge current and other abnormalities and turning off the external MOSFET switch.

The AP9101C also has a built-in fixed time circuit (external capacitors are unnecessary); the protection circuitry can be comprised with fewer external components.

The AP9101C is available in standard packages of SOT25 and SOT26.

Applications

- Lithium-ion battery packs
- Lithium polymer battery packs

Features

- Low Current Consumption (+25°C)
  - Operation Mode: 3.0μA (typ) V_{DD} = 3.5V
  - Power-Down Mode: 0.01μA (typ)
- High-Accuracy Voltage Detection Circuit (+25°C)
  - Overcharge Detection Voltage: 3.5V to 4.5V (5mV Steps) Accuracy ±25mV
  - Overcharge Hysteresis Voltage Range: 0.1V to 0.4V (50mV Steps) Accuracy ±50mV
  - Overdischarge Detection Voltage: 2.0V to 3.4V (10mV Steps) Accuracy ±35mV
  - Overdischarge Hysteresis Voltage Range: 0 to 0.7V (40mV Steps) Accuracy ±65mV
  - Discharge Overcurrent Detection Voltage: 0.05V to 0.32V (10mV Steps) Accuracy ±15mV
  - Short Current Detection Voltage: 0.45V to 0.7V (50mV Steps) Accuracy ±100mV
  - Charge Overcurrent Detection Voltage: -0.2V to -0.05V (10mV Steps) Accuracy ±15mV
  - Overcharge Detection Voltage: 8.0V (Fixed) Accuracy ±2V
  - Overcharge Release Voltage: 7.3V (Fixed) Accuracy ±2V
- Built-in Fixed Detection Delay Time (+25°C): Accuracy ±20%
- Power-Down Mode can be Selectable: Available/Unavailable
- 0V Battery Charge Function can be Selectable: Available/Unavailable
- Overcharge Protection Mode: Release
- High-Voltage CMOS Process: Up to 30V between VDD and VM Pins
- **Totally Lead-Free & Fully RoHS Compliant (Notes 1 & 2)**
- **Halogen and Antimony Free. "Green" Device (Note 3)**
- **For automotive applications requiring specific change control (i.e. parts qualified to AEC-Q100/101/104/200, PPAP capable, and manufactured in IATF 16949 certified facilities), please contact us or your local Diodes representative. https://www.diodes.com/quality/product-definitions/**

Notes:
1. No purposely added lead. Fully EU Directive 2002/95/EC (RoHS), 2011/65/EU (RoHS 2) & 2015/863/EU (RoHS 3) compliant.
2. See https://www.diodes.com/quality/lead-free/ for more information about Diodes Incorporated's definitions of Halogen- and Antimony-free, "Green" and Lead-free.
3. Halogen- and Antimony-free "Green" products are defined as those which contain <900ppm bromine, <900ppm chlorine (<1500ppm total Br + Cl) and <1000ppm antimony compounds.

NOT RECOMMENDED FOR NEW DESIGN

Pin Assignments

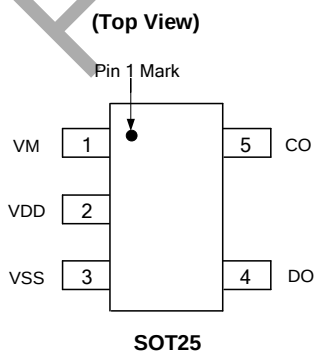

SOT25

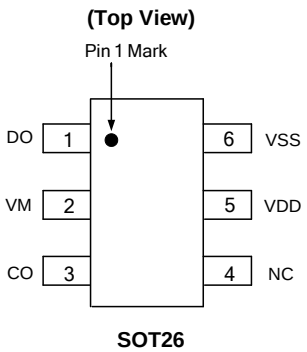

SOT26

© 2023 Copyright Diodes Incorporated. All Rights Reserved.

Typical Applications Circuit (Note 4)

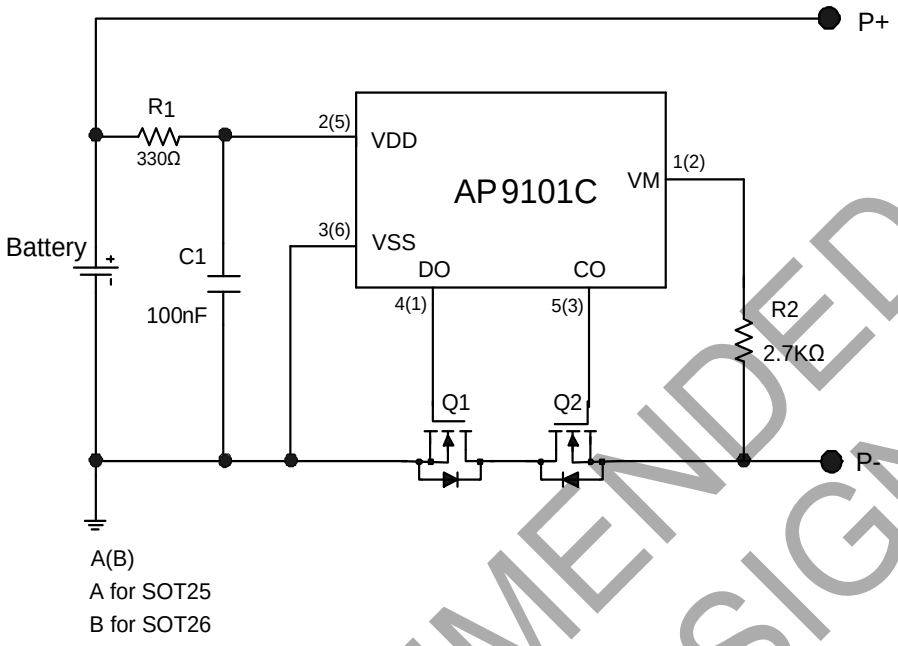

NOT RECOMMENDED FOR NEW DESIGN

Note: 4. R1 and C1 are used to stabilize the supply voltage of the AP9101C. The recommended range of R1 value is 330Ω to 470Ω and C1 value is 10nF to 1000nF, typical value is 100nF. R2 should be connected between P- to VM sense terminal to monitor the status of charger and the charge/discharge current. The R2 should be between 300Ω and 4kΩ, typical value is 2.7kΩ. R1 and R2 are also used as current limit resistors if the battery or charger is connected reversely. Polarity reversing may cause the power consumption of R1 and R2 to go over their power dissipation rating, therefore R1 and R2 values should be selected appropriately for the actual application. If R2 is more than 4kΩ resistor, CO may not cut off Q2 due to the voltage drop on R2.

For power-down mode, when first connecting AP9101C system board to the battery, it is necessary to use charger or to short P- to the battery negative polarity. Once the AP9101C is activated, the charger or connection can be removed, otherwise the battery cannot discharge current through the system board. The values selected should follow the recommended typical range mentioned above.

Pin Descriptions

Pin Number		Pin Name	Function
SOT25	SOT26		
1	2	VM	Charger Negative Input Pin
2	5	VDD	Positive Power Input Pin
3	6	VSS	Negative Power Input Pin
4	1	DO	FET Gate Control Pin for Discharge
5	3	CO	FET Gate Control Pin for Charge
—	4	NC	Not Connected

© 2023 Copyright Diodes Incorporated. All Rights Reserved.

Functional Block Diagram

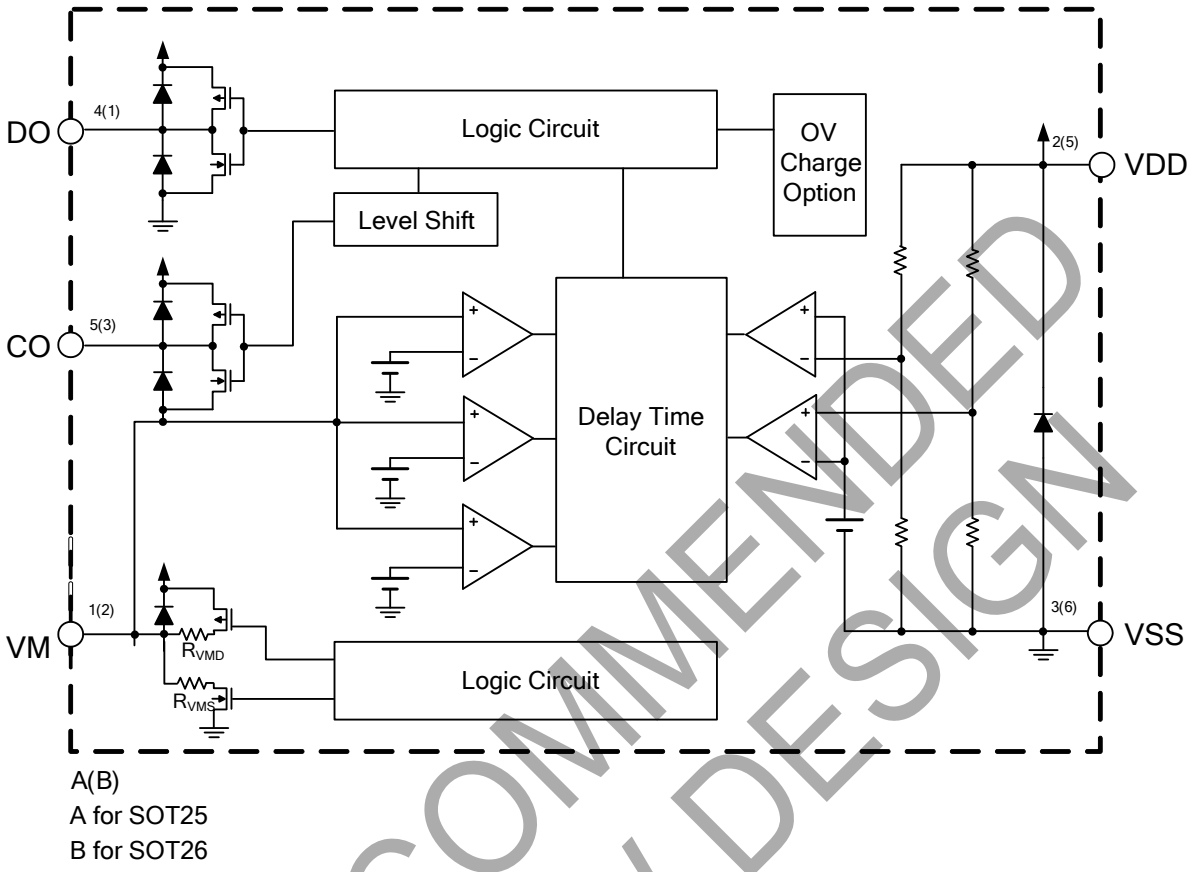

NOT RECOMMENDED FOR NEW DESIGN

Absolute Maximum Ratings (Note 5)

Symbol	Parameter	Rating	Unit
V_{DS}	Supply Voltage (Between VDD and VSS)	-0.3 to 12	V
V_{DM}	Charger Input Voltage (Between VDD and VM)	-0.3 to 30	V
V_{CO}	CO Pin Output Voltage	V_M-0.3 to V_{DD}+0.3	V
V_{DO}	DO Pin Output Voltage	V_{SS}-0.3 to V_{DD}+0.3	V
T_{OPR}	Operating Temperature Range	-40 to +85	°C
T_J	Junction Temperature	+150	°C
T_{STG}	Storage Temperature Range	-65 to +150	°C
T_{LEAD}	Lead Temperature (Soldering, 10sec)	+300	°C
P_D	Power Dissipation (+25°C)	250	mW
—	ESD (Machine Model)	200	V
—	ESD (Human Body Model)	2,000	V

Note: 5. Stresses greater than those listed under *Absolute Maximum Ratings* can cause permanent damage to the device. These are stress ratings only, and functional operation of the device at these or any other conditions beyond those indicated under *Recommended Operating Conditions* is not implied. Exposure to *Absolute Maximum Ratings* for extended periods can affect device reliability.

© 2023 Copyright Diodes Incorporated. All Rights Reserved.

Recommended Operating Conditions

Symbol	Parameter	Min	Max	Unit
V_{DS}	Supply Voltage (Between VDD and VSS)	1.5	5.5	V
V_{DM}	Charger Input Voltage (Between VDD and VM)	-0.3	5.5	V
T_A	Operating Ambient Temperature	-40	+85	°C

Electrical Characteristics (T_A = +25°C, V_{DD} = 3.5V, V_{SS} = 0V, R1 = 330Ω, R2 = 2.7kΩ, C1 = 100nF, unless otherwise specified.)

Symbol	Parameter	Test Conditions	Min	Typ	Max	Unit
V_{CU}	Overcharge Detection Voltage	V_M = 0V	V_{CU}-0.025	V_{CU}	V_{CU}+0.025	V
V_{CL}	Overcharge Release Voltage	$V_{CL} \neq V_{CU}$, V_M = 0V	V_{CL}-0.050	V_{CL}	V_{CL}+0.050	V
		$V_{CL} = V_{CU}$	V_{CL}-0.025	V_{CL}	V_{CL}+0.025	V
V_{DL}	Overdischarge Detection Voltage	V_M = 0	V_{DL}-0.035	V_{DL}	V_{DL}+0.035	V
V_{DU}	Overdischarge Release Voltage	$V_{DU} \neq V_{DL}$, V_M = 0V	V_{DU}-0.100	V_{DU}	V_{DU}+0.100	V
		$V_{DU} = V_{DL}$	V_{DU}-0.035	V_{DU}	V_{DU}+0.035	V
V_{DOC}	Discharge Overcurrent Detection Voltage	—	V_{DOC}-0.015	V_{DOC}	V_{DOC}+0.015	V
V_{SHORT}	Load Short-Circuiting Detection Voltage	—	V_{SHORT}-0.10	V_{SHORT}	V_{SHORT}+0.10	V
V_{COC}	Charge Overcurrent Detection Voltage	—	V_{COC}-0.015	V_{COC}	V_{COC}+0.015	V
I_{CC}	Current Consumption During Operation	V_{DD} = 3.5V, V_M = 0V	1.5	3	4.5	μA
I_{STB}	Current Consumption at Power-Down	V_{DD} = 1.8V, VM Pin Floating; Power-Down Mode	—	—	0.1	μA
		V_{DD} = 1.8V, VM Pin Floating; Without Power-Down Mode (Auto-Wake-up)	—	—	5.5	μA
R_{COH}	CO Pin Resistance “H”	V_{DD} = 3.5V, V_{CO} = 3.0V, V_M = 0V	2	6	10	kΩ
R_{COL}	CO Pin Resistance “L”	V_{DD} = 4.5V, V_{CO} = 0.5V, V_M = 0V	2	4	10	kΩ
R_{DOH}	DO Pin Resistance “H”	V_{DD} = 3.5V, V_{DO} = 3.0V, V_M = 0V	2	5	10	kΩ
R_{DOL}	DO Pin Resistance “L”	V_{DD} = 1.8V, V_{DO} = 0.5V, V_M = 0V	2	5	10	kΩ
R_{VMD}	Resistance Between VM Pin and VDD Pin	V_{DD} = 1.8V, V_M = 0V	150	300	500	kΩ
R_{VMS}	Resistance Between VM Pin and VSS Pin	V_{DD} = 3.5V, V_M = 1.0V	10	30	50	kΩ
V_{0CHA}	0V Battery Charge Starting Charger Voltage	0V Battery Charging “Available”	1.2	—	—	V
V_{0INH}	0V Battery Charge Inhibition Battery Voltage	0V Battery Charging “Unavailable”	—	—	0.45	V
V_{OVCHG}	Overvoltage Charger Detection Voltage	V_{DD} = 3.5V	6.0	8.0	10.0	V
V_{OVCHGR}	Overvoltage Charger Release Voltage	V_{DD} = 3.5V	5.3	7.3	9.3	V
t_{CU}	Overcharge Detection Delay Time	—	t_{CU}×0.8	t_{CU}	t_{CU}×1.2	ms
t_{DL}	Overdischarge Detection Delay Time	—	t_{DL}×0.8	t_{DL}	t_{DL}×1.2	ms
t_{DOC}	Discharge Overcurrent Detection Delay Time	—	t_{DOC}×0.8	t_{DOC}	t_{DOC}×1.2	ms
t_{SHORT}	Load Short-Circuiting Detection Delay Time	—	t_{SHORT}×0.8	t_{SHORT}	t_{SHORT}×1.2	μs
t_{COC}	Charge Overcurrent Detection Delay Time	—	t_{COC}×0.8	t_{COC}	t_{COC}×1.2	ms

NOT RECOMMENDED FOR NEW DESIGN

© 2023 Copyright Diodes Incorporated. All Rights Reserved.

Electrical Characteristics

(T_A = -40°C to +85°C, V_{DD} = 3.5V, V_{SS} = 0V, R1 = 330Ω, R2 = 2.7kΩ, C1 = 100nF, unless otherwise specified.)

Symbol	Parameter	Test Conditions	Min	Typ	Max	Unit
V_{CU}	Overcharge Detection Voltage	V_M = 0V	V_{CU}-0.060	V_{CU}	V_{CU}+0.040	V
V_{CL}	Overcharge Release Voltage	$V_{CL} \neq V_{CU}$, V_M = 0V	V_{CL}-0.080	V_{CL}	V_{CL}+0.065	V
		$V_{CL} = V_{CU}$	V_{CL}-0.060	V_{CL}	V_{CL}+0.040	V
V_{DL}	Overdischarge Detection Voltage	V_M = 0V	V_{DL}-0.110	V_{DL}	V_{DL}+0.130	V
V_{DU}	Overdischarge Release Voltage	$V_{DU} \neq V_{DL}$, V_M = 0V	V_{DU}-0.150	V_{DU}	V_{DU}+0.190	V
		$V_{DU} = V_{DL}$	V_{DU}-0.110	V_{DU}	V_{DU}+0.130	V
V_{DOC}	Discharge Overcurrent Detection Voltage	—	V_{DOC}-0.021	V_{DOC}	V_{DOC}+0.024	V
V_{SHORT}	Load Short-Circuiting Detection Voltage	—	V_{SHORT}-0.34	V_{SHORT}	V_{SHORT}+0.34	V
V_{COC}	Charge Overcurrent Detection Voltage	—	V_{COC}-0.040	V_{COC}	V_{COC}+0.040	V
I_{CC}	Current Consumption During Operation	V_{DD} = 3.5V, V_M = 0V	1.0	3.0	7.0	µA
I_{STB}	Current Consumption at Power-Down	V_{DD} = 1.8V, VM Pin Floating; Power-Down Mode	—	—	1.0	µA
		V_{DD} = 1.8V, VM Pin Floating; Without Power-Down Mode (Auto-Wake-up)	—	—	8	µA
R_{COH}	CO Pin Resistance “H”	V_{DD} = 3.5V, V_{CO} = 3.0V, V_M = 0V	1.2	6	15	kΩ
R_{COL}	CO Pin Resistance “L”	V_{DD} = 4.5V, V_{CO} = 0.5V, V_M = 0V	1.2	4	15	kΩ
R_{DOH}	DO Pin Resistance “H”	V_{DD} = 3.5V, V_{DO} = 3.0V, V_M = 0V	1.2	5	15	kΩ
R_{DOL}	DO Pin Resistance “L”	V_{DD} = 1.8V, V_{DO} = 0.5V, V_M = 0V	1.2	5	15	kΩ
R_{VMD}	Resistance between VM Pin and VDD Pin	V_{DD} = 1.8V, V_M = 0V	100	300	650	kΩ
R_{VMS}	Resistance between VM Pin and VSS Pin	V_{DD} = 3.5V, V_M = 1.0V	5	30	65	kΩ
V_{0CHA}	0V Battery Charge Starting Charger Voltage	0V Battery Charging “Available”	1.2	—	—	V
V_{0INH}	0V Battery Charge Inhibition Battery Voltage	0V Battery Charging “Unavailable”	—	—	0.3	V
V_{OVCHG}	Overvoltage Charger Detection Voltage	V_{DD} = 3.5V	5.5	8.0	10.5	V
V_{OVCHGR}	Overvoltage Charger Release Voltage	V_{DD} = 3.5V	5.0	7.3	9.5	V
t_{CU}	Overcharge Detection Delay Time	—	t_{CU}×0.6	t_{CU}	t_{CU}×1.4	ms
t_{DL}	Overdischarge Detection Delay Time	—	t_{DL}×0.6	t_{DL}	t_{DL}×1.4	ms
t_{DOC}	Discharge Overcurrent Detection Delay Time	—	t_{DOC}×0.6	t_{DOC}	t_{DOC}×1.4	ms
t_{SHORT}	Load Short-Circuiting Detection Delay Time	—	t_{SHORT}×0.6	t_{SHORT}	t_{SHORT}×1.4	µs
t_{COC}	Charge Overcurrent Detection Delay Time	—	t_{COC}×0.6	t_{COC}	t_{COC}×1.4	ms

NOT RECOMMENDED FOR NEW DESIGN

© 2023 Copyright Diodes Incorporated. All Rights Reserved.

Operation Description

Operation Mode

1. Normal Status

The AP9101C monitors the battery voltage between the VDD pin and VSS pin as well as the voltage difference between the VM pin and VSS pin to control battery charging and discharging by the CO and DO pins. When the battery voltage is between overdischarge detection voltage (V_{DL}) and overcharge detection voltage (V_{CU})—as well as the VM pin voltage being between the charge overcurrent detection voltage (V_{COC}) and discharge overcurrent detection voltage (V_{DOC})—the CO and DO pin of the AP9101C will output high level and turn on charge and discharge MOSFETs. In these conditions, the battery can charge and discharge freely. Also, R_{VMD} and R_{VMS} do not connect to VDD and VSS pins in this status.

2. Overcharge Status

If the battery voltage is more than V_{CU} during charging status for the overcharge detection delay time (t_{CU}) or longer, the AP9101C turns off the charge MOSFET by setting low level to the CO pin to stop charging. R_{VMD} and R_{VMS} are not connected in overcharge status.

When the VM pin voltage is lower than V_{DOC} and battery voltage falls below V_{CL}, the AP9101C will release from overcharge status.

When the VM pin voltage is equal to or more than V_{DOC} and battery voltage falls below V_{CU}, the AP9101C will release from overcharge status.

3. Overdischarge Status

If the battery voltage is less than V_{DL} during discharging status for the overdischarge detection delay time (t_{DL}) or longer, the AP9101C turns off the discharge MOSFET by setting low level to the DO pin to stop discharging. In overdischarge status, R_{VMD} is connected to V_{DD}, and the VM pin voltage is pulled up to V_{DD} by R_{VMD}, but R_{VMS} is not connected. For standby version, the AP9101C recovers normal status from overdischarge status only by charging the battery through the charger.

When the VM pin voltage to the VSS pin voltage is less than typical -0.7V and the battery voltage rises over V_{DL}, the AP9101C will release from overdischarge status. If the VM pin voltage to the VSS pin voltage is higher than typical -0.7V, the AP9101C will release from overdischarge status until the battery voltage rises over V_{DU}.

For auto-wake-up version AP9101CA, the device recovers to normal status from overdischarge status if either of these two conditions are satisfied.

If charger is connected:	the AP9101CA overdischarge status is released in the same way as described above in AP9101C *Overdischarge Status* section.
If no charger is connected:	1) the battery voltage reaches the overdischarge release voltage (V_{DU}) or higher; 2) maintains continuous time more than overdischarge release delay time t_{DLR}.

4. Discharge Overcurrent and Short Current Status

When the battery is in discharge overcurrent status, if the voltage of the VM pin to VSS pin is equal or more than V_{DOC} to V_{SHORT}, for the overdischarge current detection delay time (t_{DOC}) or longer, the AP9101C turns off the discharge MOSFET by setting low level to the DO pin to stop discharging.

When the battery is in short current status, if the voltage of the VM pin to VSS pin is equal to or more than V_{SHORT}, for the short current detection delay time or longer, the AP9101C turns off the discharge MOSFET by setting low level to the DO pin to stop discharging.

In discharge overcurrent or short current status, R_{VMS} is connected to V_{SS} but R_{VMD} is not connected. The voltage of VM pin is almost equal to V_{DD} as long as the load is connected. When the load is disconnected, the voltage of VM pin will become almost equal to V_{SS} (due to R_{VMS} being connected) then the AP9101C will release from discharge overcurrent or short current status.

5. Charge Overcurrent Status

When the battery is in charge overcurrent status, if the voltage of the VM pin to VSS pin is equal to or less than V_{COC}, for the charge overcurrent detection delay time (t_{COC}) or longer, the AP9101C turns off the charge MOSFET by setting low level to the CO pin to stop charging.

NOT RECOMMENDED FOR NEW DESIGN

© 2023 Copyright Diodes Incorporated. All Rights Reserved.

Operation Description (continued)

6. 0V Battery Charging Function (Option)

This function is available as an option and can be factory set internally. AP9101C has this function built in.

0V charging function permits charger to recharge the battery whose voltage is 0V due to self-discharge. If 0V charging function is not present, the device will prevent the charger to recharge the battery whose voltage is 0V due to self-discharge. (If a device without 0V charging function is needed, please contact Diodes Incorporated's sales team).

7. Overvoltage Charger Detection Circuit

This function is used to monitor the charger voltage between the VDD pin and VM pin, and when this voltage exceeds overvoltage charger detection voltage (8.0V typ), the AP9101C will set the CO pin low level to turn off charge MOSFET. When this voltage drops below overvoltage charger release voltage (7.3V typ), the CO pin will be set to high level and turn on charge MOSFET. There are no delay times set for detection and release.

8. Power-Down Mode or Auto-Wake-Up Function (Option)

In the device with power-down function, during power-down mode, the device enters the overdischarge status. The IC enters sleep mode and the current consumption becomes very low, typically 0.1μA. To release from power-down status to normal status, charger connection is required.

In the device with auto-wake-up mode, the IC remains active in the overdischarge state. The IC is released into normal state by the operation that increases the battery voltage more than the overdischarge release voltage.

NOT RECOMMENDED FOR NEW DESIGN

© 2023 Copyright Diodes Incorporated. All Rights Reserved.

Time Chart

(1) Overcharge and Overdischarge Detection

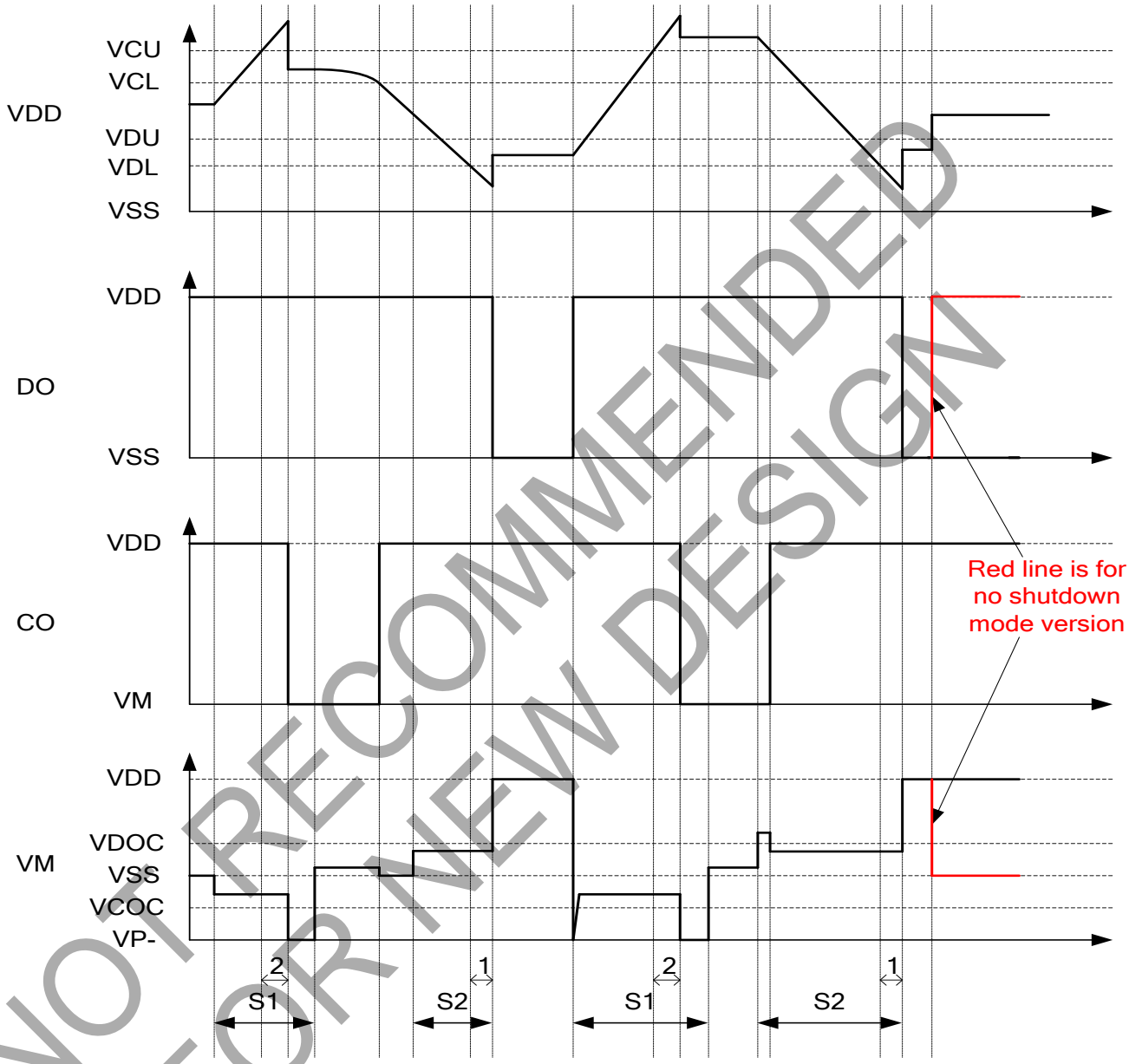

NOT RECOMMENDED FOR NEW DESIGN

1: t_{DL}
2: t_{CU}

S1: Charger connection
S2: Load connection

© 2023 Copyright Diodes Incorporated. All Rights Reserved.

Time Chart (continued)

(2) Discharge Overcurrent Detection

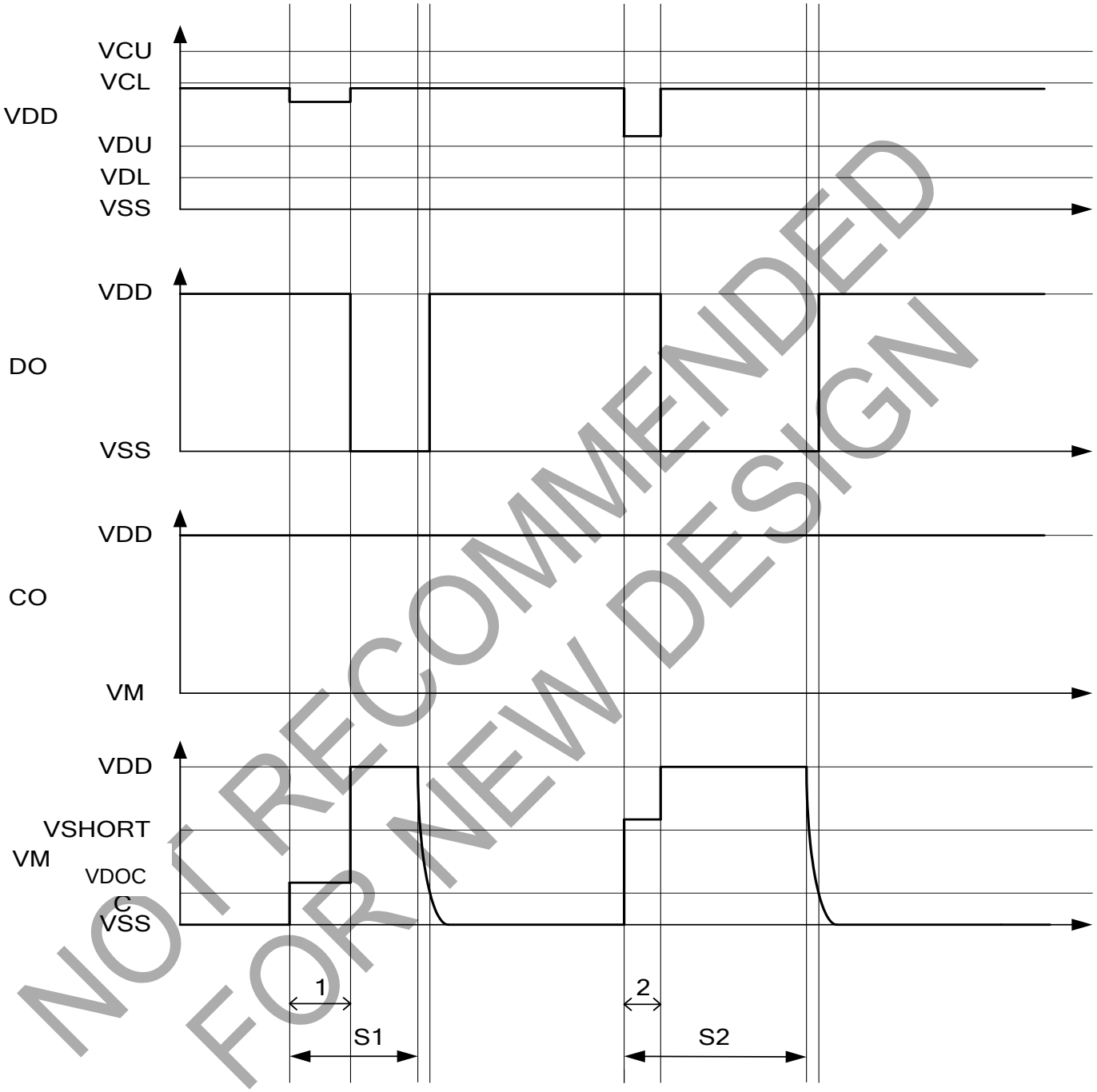

NOT RECOMMENDED FOR NEW DESIGN

1: t_{DOC}
2: t_{SHORT}

S1: Connect over current load
S2: Connect short current load

© 2023 Copyright Diodes Incorporated. All Rights Reserved.

Time Chart (continued)

(3) Charge Overcurrent Detection

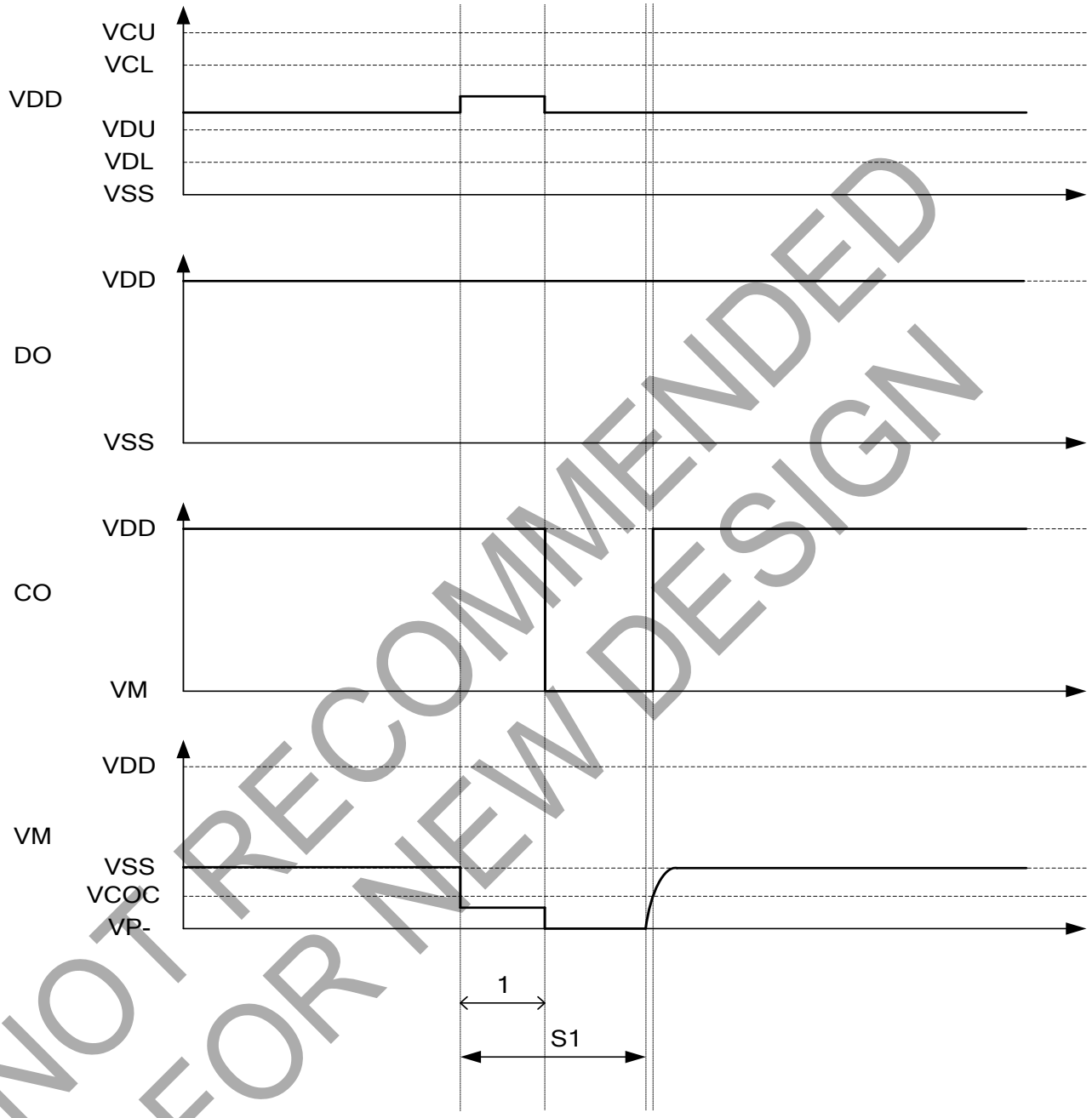

1: t_{COC}

S1: Connect over current charger

NOT RECOMMENDED FOR NEW DESIGN

© 2023 Copyright Diodes Incorporated. All Rights Reserved.

Ordering Information

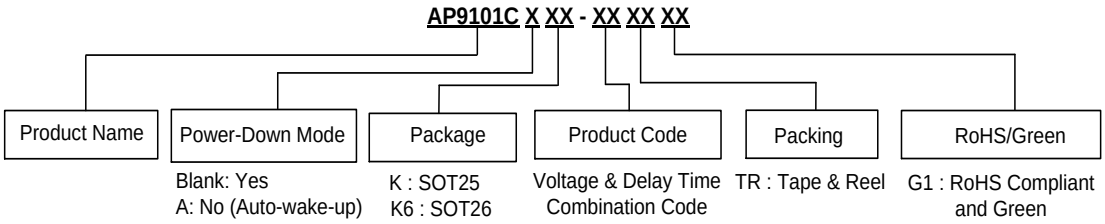

Voltage and Delay Time Combination

Part Number	Overcharge Detection Voltage V_{CU}	Overcharge Release Voltage V_{CL}	Over-discharge Detection Voltage V_{DL}	Over-discharge Release Voltage V_{DU}	Discharge Overcurrent Detection Voltage V_{DOC}	Load Short Detection Voltage V_{SHORT}	Charge Overcurrent Detection Voltage V_{COC}	Over-voltage Charger Detection Voltage V_{OVCHG}	Over-voltage Charger Release Voltage V_{OVCHGR}	Power-Down Function	Overcharge Protection Mode	Delay Time	0V Battery Charge Function
AP9101Cxxx-AATRG1	4.375V	4.175V	2.500V	2.900V	0.150V	0.700V	-0.150V	8.0V	7.3V	Selectable	Auto Release	Option 1	Permission
AP9101Cxxx-ABTRG1	4.425V	4.225V	2.500V	2.900V	0.150V	0.700V	-0.150V	8.0V	7.3V	Selectable	Auto Release	Option 1	Permission
AP9101Cxxx-ACTRG1	4.375V	4.175V	2.500V	2.900V	0.095V	0.700V	-0.095V	8.0V	7.3V	Selectable	Auto Release	Option 1	Permission
AP9101Cxxx-ADTRG1	4.375V	4.175V	2.500V	2.900V	0.120V	0.700V	-0.120V	8.0V	7.3V	Selectable	Auto Release	Option 1	Permission
AP9101Cxxx-AETRG1	4.200V	4.100V	2.500V	3.000V	0.300V	0.550V	-0.100V	8.0V	7.3V	Selectable	Auto Release	Option 1	Permission
AP9101Cxxx-AFTRG1	4.375V	4.175V	2.500V	2.900V	0.180V	0.700V	-0.180V	8.0V	7.3V	Selectable	Auto Release	Option 1	Permission
AP9101Cxxx-AGTRG1	4.375V	4.175V	2.500V	2.900V	0.075V	0.700V	-0.075V	8.0V	7.3V	Selectable	Auto Release	Option 1	Permission
AP9101Cxxx-AHTRG1	4.425V	4.225V	2.500V	2.900V	0.075V	0.700V	-0.075V	8.0V	7.3V	Selectable	Auto Release	Option 1	Permission
AP9101Cxxx-AITRG1	4.500V	4.300V	2.400V	2.800V	0.150V	0.700V	-0.075V	8.0V	7.3V	Selectable	Auto Release	Option 1	Permission
AP9101Cxxx-AJTRG1	4.375V	4.175V	2.400V	2.800V	0.125V	0.700V	-0.125V	8.0V	7.3V	Selectable	Auto Release	Option 1	Permission
AP9101Cxxx-AKTRG1	4.250V	4.050V	2.400V	3.000V	0.150V	0.700V	-0.150V	8.0V	7.3V	Selectable	Auto Release	Option 1	Permission
AP9101Cxxx-ALTRG1	4.275V	4.175V	2.300V	2.400V	0.180V	0.700V	-0.180V	8.0V	7.3V	Selectable	Auto Release	Option 1	Permission
AP9101Cxxx-AMTRG1	4.375V	4.175V	2.300V	2.400V	0.180V	0.700V	-0.180V	8.0V	7.3V	Selectable	Auto Release	Option 1	Permission
AP9101Cxxx-ANTRG1	4.225V	4.025V	3.200V	3.400V	0.060V	0.450V	-0.060V	8.0V	7.3V	Selectable	Auto Release	Option 1	Permission
AP9101Cxxx-AOTRG1	4.425V	4.225V	2.500V	2.900V	0.064V	0.450V	-0.073V	8.0V	7.3V	Selectable	Auto Release	Option 1	Permission
AP9101Cxxx-ASTRG1	3.800V	3.700V	2.300V	2.400V	0.180V	0.700V	-0.180V	8.0V	7.3V	Selectable	Auto Release	Option 1	Permission
AP9101Cxxx-ATTRG1	4.400V	4.200V	2.800V	3.000V	0.150V	0.700V	-0.200V	8.0V	7.3V	Selectable	Auto Release	Option 1	Permission
AP9101Cxxx-AUTRG1	4.300V	4.100V	2.500V	2.900V	0.100V	0.700V	-0.100V	8.0V	7.3V	Selectable	Auto Release	Option 1	Permission
AP9101Cxxx-AXTRG1	4.280V	4.080V	2.800V	2.800V	0.100V	0.500V	-0.100V	8.0V	7.3V	Selectable	Auto Release	Option 1	Permission

NOT RECOMMENDED FOR NEW DESIGN

© 2023 Copyright Diodes Incorporated. All Rights Reserved.

Ordering Information (continued)

Voltage and Delay Time Combination (continued)

Part Number	Overcharge Detection Voltage V_{CU}	Overcharge Release Voltage V_{CL}	Over-discharge Detection Voltage V_{DL}	Over-discharge Release Voltage V_{DU}	Discharge Overcurrent Detection Voltage V_{DOC}	Load Short Detection Voltage V_{SHORT}	Charge Overcurrent Detection Voltage V_{COC}	Over-voltage Charger Detection Voltage V_{OVCHG}	Over-voltage Charger Release Voltage V_{OVCHGR}	Power-Down Function	Overcharge Protection Mode	Delay Time	0V Battery Charge Function
AP9101Cxxx-AYTRG1	4.275V	4.075V	2.800V	2.900V	0.150V	0.500V	-0.100V	8.0V	7.3V	Selectable	Auto Release	Option 1	Prohibition
AP9101Cxxx-AZTRG1	4.275V	4.075V	2.500V	2.900V	0.150V	0.500V	-0.100V	8.0V	7.3V	Selectable	Auto Release	Option 1	Prohibition
AP9101Cxxx-BATRG1	4.475V	4.275V	2.500V	2.900V	0.150V	0.500V	-0.150V	8.0V	7.3V	Selectable	Auto Release	Option 1	Permission
AP9101Cxxx-BBTRG1	4.475V	4.275V	2.500V	2.900V	0.200V	0.500V	-0.200V	8.0V	7.3V	Selectable	Auto Release	Option 1	Permission
AP9101Cxxx-BCTRG1	4.465V	4.265V	2.100V	2.100V	0.150V	0.500V	-0.100V	8.0V	7.3V	Selectable	Auto Release	Option 1	Permission
AP9101Cxxx-BDTRG1	4.425V	4.225V	2.500V	2.500V	0.160V	0.500V	-0.100V	8.0V	7.3V	Selectable	Auto Release	Option 1	Permission
AP9101Cxxx-BETRG1	4.425V	4.225V	2.500V	2.500V	0.160V	0.500V	-0.160V	8.0V	7.3V	Selectable	Auto Release	Option 1	Permission
AP9101Cxxx-BFTRG1	4.425V	4.225V	2.500V	2.800V	0.160V	0.500V	-0.150V	8.0V	7.3V	Selectable	Auto Release	Option 1	Permission
AP9101Cxxx-BGTRG1	4.425V	4.225V	2.500V	2.800V	0.200V	0.500V	-0.150V	8.0V	7.3V	Selectable	Auto Release	Option 1	Permission
AP9101Cxxx-BHTRG1	4.425V	4.225V	2.500V	2.900V	0.200V	0.500V	-0.200V	8.0V	7.3V	Selectable	Auto Release	Option 1	Permission
AP9101Cxxx-BITRG1	4.425V	4.225V	2.500V	2.900V	0.130V	0.500V	-0.130V	8.0V	7.3V	Selectable	Auto Release	Option 1	Permission
AP9101Cxxx-BJTRG1	4.400V	4.300V	3.000V	3.200V	0.250V	0.600V	-0.200V	8.0V	7.3V	Selectable	Auto Release	Option 1	Permission
AP9101Cxxx-BKTRG1	4.400V	4.200V	2.800V	3.000V	0.150V	0.600V	-0.200V	8.0V	7.3V	Selectable	Auto Release	Option 1	Prohibition
AP9101Cxxx-BLTRG1	4.380V	4.280V	2.600V	2.800V	0.150V	0.600V	-0.175V	8.0V	7.3V	Selectable	Auto Release	Option 1	Permission
AP9101Cxxx-BMTRG1	4.375V	4.175V	2.300V	2.400V	0.150V	0.600V	-0.150V	8.0V	7.3V	Selectable	Auto Release	Option 1	Permission
AP9101Cxxx-BNTRG1	4.325V	4.075V	2.500V	2.900V	0.150V	0.600V	-0.100V	8.0V	7.3V	Selectable	Auto Release	Option 1	Prohibition
AP9101Cxxx-BOTRG1	4.325V	4.075V	2.500V	2.900V	0.150V	0.500V	-0.150V	8.0V	7.3V	Selectable	Auto Release	Option 1	Prohibition
AP9101Cxxx-BPTRG1	4.325V	4.125V	2.500V	2.800V	0.150V	0.600V	-0.100V	8.0V	7.3V	Selectable	Auto Release	Option 1	Permission
AP9101Cxxx-BQTRG1	4.300V	4.100V	2.300V	2.300V	0.250V	0.600V	-0.100V	8.0V	7.3V	Selectable	Auto Release	Option 1	Permission
AP9101Cxxx-BRTRG1	4.280V	4.080V	3.000V	3.300V	0.080V	0.500V	-0.080V	8.0V	7.3V	Selectable	Auto Release	Option 1	Permission
AP9101Cxxx-BSTRG1	4.280V	4.080V	3.000V	3.300V	0.080V	0.500V	-0.100V	8.0V	7.3V	Selectable	Auto Release	Option 1	Permission
AP9101Cxxx-BTTRG1	4.280V	4.080V	2.300V	2.300V	0.160V	0.500V	-0.100V	8.0V	7.3V	Selectable	Auto Release	Option 1	Permission
AP9101Cxxx-BUTRG1	4.280V	4.080V	2.300V	2.300V	0.125V	0.600V	-0.100V	8.0V	7.3V	Selectable	Auto Release	Option 1	Permission

NOT RECOMMENDED FOR NEW DESIGN

© 2023 Copyright Diodes Incorporated. All Rights Reserved.

Ordering Information (continued)

Voltage and Delay Time Combination (continued)

Part Number	Overcharge Detection Voltage V_{CU}	Overcharge Release Voltage V_{CL}	Over-discharge Detection Voltage V_{DL}	Over-discharge Release Voltage V_{DU}	Discharge Overcurrent Detection Voltage V_{DOC}	Load Short Detection Voltage V_{SHORT}	Charge Overcurrent Detection Voltage V_{COC}	Over-voltage Charger Detection Voltage V_{OVCHG}	Over-voltage Charger Release Voltage V_{OVCHGR}	Power-Down Function	Overcharge Protection Mode	Delay Time	0V Battery Charge Function
AP9101Cxxx-BVTRG1	4.280V	4.080V	2.800V	3.000V	0.100V	0.500V	-0.100V	8.0V	7.3V	Selectable	Auto Release	Option 1	Permission
AP9101Cxxx-BWTRG1	4.280V	4.180V	3.000V	3.000V	0.180V	0.600V	-0.150V	8.0V	7.3V	Selectable	Auto Release	Option 1	Permission
AP9101Cxxx-BXTRG1	4.280V	4.180V	2.800V	2.800V	0.050V	0.600V	-0.050V	8.0V	7.3V	Selectable	Auto Release	Option 1	Permission
AP9101Cxxx-BYTRG1	4.280V	4.180V	2.800V	2.800V	0.250V	0.600V	-0.100V	8.0V	7.3V	Selectable	Auto Release	Option 1	Permission
AP9101Cxxx-BZTRG1	4.280V	4.130V	2.800V	3.100V	0.100V	0.500V	-0.100V	8.0V	7.3V	Selectable	Auto Release	Option 1	Permission
AP9101Cxxx-CATRG1	4.275V	4.175V	2.300V	2.800V	0.250V	0.600V	-0.200V	8.0V	7.3V	Selectable	Auto Release	Option 1	Permission
AP9101Cxxx-CBTRG1	4.275V	4.175V	2.300V	2.400V	0.200V	0.500V	-0.200V	8.0V	7.3V	Selectable	Auto Release	Option 1	Permission
AP9101Cxxx-CCTRG1	4.275V	4.075V	2.500V	2.900V	0.150V	0.500V	-0.150V	8.0V	7.3V	Selectable	Auto Release	Option 1	Prohibition
AP9101Cxxx-CDTRG1	4.275V	4.075V	2.300V	2.300V	0.150V	0.600V	-0.100V	8.0V	7.3V	Selectable	Auto Release	Option 1	Permission
AP9101Cxxx-CETRG1	4.275V	4.175V	2.300V	2.400V	0.100V	0.600V	-0.100V	8.0V	7.3V	Selectable	Auto Release	Option 1	Permission
AP9101Cxxx-CFTRG1	4.275V	4.075V	2.800V	2.800V	0.150V	0.600V	-0.100V	8.0V	7.3V	Selectable	Auto Release	Option 1	Permission
AP9101Cxxx-CGTRG1	4.275V	4.075V	2.800V	3.000V	0.150V	0.600V	-0.100V	8.0V	7.3V	Selectable	Auto Release	Option 1	Permission
AP9101Cxxx-CHTRG1	4.250V	4.150V	2.500V	2.700V	0.250V	0.600V	-0.200V	8.0V	7.3V	Selectable	Auto Release	Option 1	Permission
AP9101Cxxx-CITRG1	4.250V	4.150V	2.700V	3.000V	0.250V	0.600V	-0.200V	8.0V	7.3V	Selectable	Auto Release	Option 1	Permission
AP9101Cxxx-CJTRG1	4.250V	4.050V	2.500V	2.800V	0.200V	0.600V	-0.100V	8.0V	7.3V	Selectable	Auto Release	Option 1	Permission
AP9101Cxxx-CKTRG1	4.250V	4.150V	2.800V	3.000V	0.150V	0.600V	-0.100V	8.0V	7.3V	Selectable	Auto Release	Option 1	Permission
AP9101Cxxx-CLTRG1	4.250V	4.150V	2.500V	3.000V	0.150V	0.600V	-0.100V	8.0V	7.3V	Selectable	Auto Release	Option 1	Permission
AP9101Cxxx-CMTRG1	4.200V	4.100V	2.800V	3.000V	0.150V	0.550V	-0.150V	8.0V	7.3V	Selectable	Auto Release	Option 1	Prohibition
AP9101Cxxx-CNTRG1	4.200V	4.100V	2.500V	2.500V	0.150V	0.600V	-0.100V	8.0V	7.3V	Selectable	Auto Release	Option 1	Permission
AP9101Cxxx-COTRG1	4.190V	4.090V	2.700V	3.000V	0.100V	0.600V	-0.050V	8.0V	7.3V	Selectable	Auto Release	Option 1	Prohibition
AP9101Cxxx-CPTRG1	3.650V	3.450V	2.100V	2.300V	0.150V	0.550V	-0.150V	8.0V	7.3V	Selectable	Auto Release	Option 1	Permission
AP9101Cxxx-CQTRG1	4.250V	4.050V	2.800V	3.000V	0.150V	0.500V	-0.100V	8.0V	7.3V	Selectable	Auto Release	Option 1	Prohibition
AP9101Cxxx-DUTRG1	4.280V	4.080V	2.300V	2.300V	0.125V	0.600V	-0.100V	8.0V	7.3V	Selectable	Auto Release	Option 1	Prohibition

NOT RECOMMENDED FOR NEW DESIGN

Delay Time Option Overview

Delay Time Option	Overcharge Detection Delay Time (t_{CU})	Overdischarge Detection Delay Time (t_{DL})	Discharge Overcurrent Detection Delay Time (t_{DOC})	Charge Overcurrent Detection Delay Time (t_{COC})	Load Short Circuiting Detection Delay Time (t_{SHORT})
1	1,000ms	115ms	10ms	10ms	320µs
2	125ms	32ms	8ms	8ms	160µs
3	1,000ms	20ms	12ms	10ms	320µs
4	1,000ms	42ms	10ms	10ms	320µs
5	1,000ms	115ms	10ms	10ms	160µs

© 2023 Copyright Diodes Incorporated. All Rights Reserved.

Ordering Information (continued) (Note 6)

Product Name	Package	Part Number	Marking ID	Packing	
				Qty.	Carrier
AP9101C	SOT25	AP9101CK-AATRG1	GQA	3000	Tape & Reel
		AP9101CK-ABTRG1	G6U	3000	Tape & Reel
		AP9101CK-ACTRG1	GQJ	3000	Tape & Reel
		AP9101CK-ADTRG1	GQK	3000	Tape & Reel
		AP9101CK-AETRG1	GQD	3000	Tape & Reel
		AP9101CK-AFTRG1	GQL	3000	Tape & Reel
		AP9101CK-AGTRG1	GQM	3000	Tape & Reel
		AP9101CK-AHTRG1	GQN	3000	Tape & Reel
		AP9101CK-AITRG1	GQP	3000	Tape & Reel
		AP9101CK-AJTRG1	GQQ	3000	Tape & Reel
		AP9101CK-AKTRG1	GQG	3000	Tape & Reel
		AP9101CK-ALTRG1	GQR	3000	Tape & Reel
		AP9101CK-AMTRG1	GQS	3000	Tape & Reel
		AP9101CK-ANTRG1	GQT	3000	Tape & Reel
		AP9101CK-AOTRG1	GRT	3000	Tape & Reel
		AP9101CK-ASTRG1	GQV	3000	Tape & Reel
		AP9101CK-ATTRG1	GUZ	3000	Tape & Reel
		AP9101CK-AUTRG1	GVZ	3000	Tape & Reel
		AP9101CK-AXTRG1	GWZ	3000	Tape & Reel
		AP9101CK-AYTRG1	GYZ	3000	Tape & Reel
		AP9101CK-AZTRG1	GZB	3000	Tape & Reel
		AP9101CK-BATRG1	GZC	3000	Tape & Reel
		AP9101CK-BBTRG1	GZD	3000	Tape & Reel
		AP9101CK-BCTRG1	GZE	3000	Tape & Reel
		AP9101CK-BDTRG1	GZF	3000	Tape & Reel
		AP9101CK-BETRG1	GZG	3000	Tape & Reel
		AP9101CK-BFTRG1	GZH	3000	Tape & Reel
		AP9101CK-BGTRG1	GZJ	3000	Tape & Reel
		AP9101CK-BHTRG1	GZK	3000	Tape & Reel
		AP9101CK-BITRG1	GZL	3000	Tape & Reel
		AP9101CK-BJTRG1	GZM	3000	Tape & Reel
		AP9101CK-BKTRG1	GZN	3000	Tape & Reel
		AP9101CK-BLTRG1	GZP	3000	Tape & Reel
		AP9101CK-BMTRG1	GZQ	3000	Tape & Reel
		AP9101CK-BNTRG1	GZR	3000	Tape & Reel
		AP9101CK-BOTRG1	GZS	3000	Tape & Reel

NOT RECOMMENDED FOR NEW DESIGN

Note: 6. Current voltage versions are built by delay time option 1. If any other voltage versions or delay time option products are needed, please contact with the local sale's office.

© 2023 Copyright Diodes Incorporated. All Rights Reserved.

Ordering Information (continued) (Note 6)

Product Name	Package	Part Number	Marking ID	Packing	
				Qty.	Carrier
AP9101C	SOT25	AP9101CK-BPTRG1	GZT	3000	Tape & Reel
		AP9101CK-BQTRG1	GZU	3000	Tape & Reel
		AP9101CK-BRTRG1	GZV	3000	Tape & Reel
		AP9101CK-BSTRG1	GZW	3000	Tape & Reel
		AP9101CK-BTTRG1	GZZ	3000	Tape & Reel
		AP9101CK-BUTRG1	L1A	3000	Tape & Reel
		AP9101CK-BVTRG1	L1B	3000	Tape & Reel
		AP9101CK-BWTRG1	L1C	3000	Tape & Reel
		AP9101CK-BXTRG1	L1D	3000	Tape & Reel
		AP9101CK-BYTRG1	L1E	3000	Tape & Reel
		AP9101CK-BZTRG1	L1F	3000	Tape & Reel
		AP9101CK-CATRG1	L1G	3000	Tape & Reel
		AP9101CK-CBTRG1	L1H	3000	Tape & Reel
		AP9101CK-CCTRG1	L1J	3000	Tape & Reel
		AP9101CK-CDTRG1	L1K	3000	Tape & Reel
		AP9101CK-CETRG1	L1L	3000	Tape & Reel
		AP9101CK-CFTRG1	L1M	3000	Tape & Reel
		AP9101CK-CGTRG1	L1N	3000	Tape & Reel
		AP9101CK-CHTRG1	L1P	3000	Tape & Reel
		AP9101CK-CITRG1	L1Q	3000	Tape & Reel
		AP9101CK-CJTRG1	L1R	3000	Tape & Reel
		AP9101CK-CKTRG1	L1S	3000	Tape & Reel
		AP9101CK-CLTRG1	L1T	3000	Tape & Reel
		AP9101CK-CMTRG1	L1U	3000	Tape & Reel
		AP9101CK-CNTRG1	L1V	3000	Tape & Reel
		AP9101CK-COTRG1	L1W	3000	Tape & Reel
		AP9101CK-CPTRG1	L1Z	3000	Tape & Reel
		AP9101CK-CQTRG1	L2A	3000	Tape & Reel
		AP9101CAK-AATRG1	GRA	3000	Tape & Reel
		AP9101CAK-ABTRG1	GSC	3000	Tape & Reel
		AP9101CAK-ACTRG1	GRJ	3000	Tape & Reel
		AP9101CAK-ADTRG1	GRK	3000	Tape & Reel
		AP9101CAK-AETRG1	GRD	3000	Tape & Reel
		AP9101CAK-AFTRG1	GRL	3000	Tape & Reel
		AP9101CAK-AGTRG1	GRM	3000	Tape & Reel
		AP9101CAK-AHTRG1	GRN	3000	Tape & Reel
		AP9101CAK-AITRG1	GRP	3000	Tape & Reel

Note: 6. Current voltage versions are built by delay time option 1. If any other voltage versions or delay time option products are needed, please contact with the local sale's office.

NOT RECOMMENDED FOR NEW DESIGN

© 2023 Copyright Diodes Incorporated. All Rights Reserved.

Ordering Information (continued) (Note 6)

Product Name	Package	Part Number	Marking ID	Packing	
				Qty.	Carrier
AP9101C	SOT25	AP9101CAK-AJTRG1	GRQ	3000	Tape & Reel
		AP9101CAK-AKTRG1	GRG	3000	Tape & Reel
		AP9101CAK-ALTRG1	GRR	3000	Tape & Reel
		AP9101CAK-AMTRG1	GRS	3000	Tape & Reel
		AP9101CAK-ANTRG1	GST	3000	Tape & Reel
		AP9101CAK-AOTRG1	GTT	3000	Tape & Reel
		AP9101CAK-ASTRG1	GSV	3000	Tape & Reel
		AP9101CAK-ATTRG1	GSW	3000	Tape & Reel
		AP9101CAK-AUTRG1	L2B	3000	Tape & Reel
		AP9101CAK-AXTRG1	L2C	3000	Tape & Reel
		AP9101CAK-AYTRG1	L2D	3000	Tape & Reel
		AP9101CAK-AZTRG1	L2E	3000	Tape & Reel
		AP9101CAK-BATRG1	L2F	3000	Tape & Reel
		AP9101CAK-BBTRG1	L2G	3000	Tape & Reel
		AP9101CAK-BCTRG1	L2H	3000	Tape & Reel
		AP9101CAK-BDTRG1	L2J	3000	Tape & Reel
		AP9101CAK-BETRG1	L2K	3000	Tape & Reel
		AP9101CAK-BFTRG1	L2L	3000	Tape & Reel
		AP9101CAK-BGTRG1	L2M	3000	Tape & Reel
		AP9101CAK-BHTRG1	L2N	3000	Tape & Reel
		AP9101CAK-BITRG1	L2P	3000	Tape & Reel
		AP9101CAK-BJTRG1	L2Q	3000	Tape & Reel
		AP9101CAK-BKTRG1	L2R	3000	Tape & Reel
		AP9101CAK-BLTRG1	L2S	3000	Tape & Reel
		AP9101CAK-BMTRG1	L2T	3000	Tape & Reel
		AP9101CAK-BNTRG1	L2U	3000	Tape & Reel
		AP9101CAK-BOTRG1	L2V	3000	Tape & Reel
		AP9101CAK-BPTRG1	L2W	3000	Tape & Reel
		AP9101CAK-BQTRG1	L2Z	3000	Tape & Reel
		AP9101CAK-BRTRG1	L3A	3000	Tape & Reel
		AP9101CAK-BSTRG1	L3B	3000	Tape & Reel
		AP9101CAK-BTTRG1	L3C	3000	Tape & Reel
		AP9101CAK-BUTRG1	L3D	3000	Tape & Reel
		AP9101CAK-BVTRG1	L3E	3000	Tape & Reel
		AP9101CAK-BWTRG1	L3F	3000	Tape & Reel
		AP9101CAK-BXTRG1	L3G	3000	Tape & Reel
		AP9101CAK-BYTRG1	L3H	3000	Tape & Reel

Note: 6. Current voltage versions are built by delay time option 1. If any other voltage versions or delay time option products are needed, please contact with the local sale's office.

NOT RECOMMENDED FOR NEW DESIGN

© 2023 Copyright Diodes Incorporated. All Rights Reserved.

Ordering Information (continued) (Note 6)

Product Name	Package	Part Number	Marking ID	Packing	
				Qty.	Carrier
AP9101C	SOT25	AP9101CAK-BZTRG1	L3J	3000	Tape & Reel
		AP9101CAK-CATRG1	L3K	3000	Tape & Reel
		AP9101CAK-CBTRG1	L3L	3000	Tape & Reel
		AP9101CAK-CCTRG1	L3M	3000	Tape & Reel
		AP9101CAK-CDTRG1	L3N	3000	Tape & Reel
		AP9101CAK-CETRG1	L3P	3000	Tape & Reel
		AP9101CAK-CFTRG1	L3Q	3000	Tape & Reel
		AP9101CAK-CGTRG1	L3R	3000	Tape & Reel
		AP9101CAK-CHTRG1	L3S	3000	Tape & Reel
		AP9101CAK-CITRG1	L3T	3000	Tape & Reel
		AP9101CAK-CJTRG1	L3U	3000	Tape & Reel
		AP9101CAK-CKTRG1	L3V	3000	Tape & Reel
		AP9101CAK-CLTRG1	L3W	3000	Tape & Reel
		AP9101CAK-CMTRG1	L3Z	3000	Tape & Reel
		AP9101CAK-CNTRG1	L4A	3000	Tape & Reel
		AP9101CAK-COTRG1	GZA	3000	Tape & Reel
		AP9101CAK-CPTRG1	GSZ	3000	Tape & Reel
		AP9101CAK-CQTRG1	L4B	3000	Tape & Reel
AP9101C	SOT26	AP9101CK6-AATRG1	GQB	3000	Tape & Reel
		AP9101CK6-ABTRG1	GQC	3000	Tape & Reel
		AP9101CK6-ACTRG1	GSJ	3000	Tape & Reel
		AP9101CK6-ADTRG1	GSK	3000	Tape & Reel
		AP9101CK6-AETRG1	GQE	3000	Tape & Reel
		AP9101CK6-AFTRG1	GSL	3000	Tape & Reel
		AP9101CK6-AGTRG1	GSM	3000	Tape & Reel
		AP9101CK6-AHTRG1	GSN	3000	Tape & Reel
		AP9101CK6-AITRG1	GSP	3000	Tape & Reel
		AP9101CK6-AJTRG1	GSQ	3000	Tape & Reel
		AP9101CK6-AKTRG1	GQH	3000	Tape & Reel
		AP9101CK6-ALTRG1	GSR	3000	Tape & Reel
		AP9101CK6-AMTRG1	GSS	3000	Tape & Reel
		AP9101CK6-ANTRG1	GQU	3000	Tape & Reel
		AP9101CK6-AOTRG1	GRU	3000	Tape & Reel
		AP9101CK6-ASTRG1	GRW	3000	Tape & Reel
		AP9101CK6-ATTRG1	GRV	3000	Tape & Reel
		AP9101CK6-AUTRG1	GQW	3000	Tape & Reel
		AP9101CK6-AXTRG1	GPU	3000	Tape & Reel

Note: 6. Current voltage versions are built by delay time option 1. If any other voltage versions or delay time option products are needed, please contact with the local sale's office.

NOT RECOMMENDED FOR NEW DESIGN

© 2023 Copyright Diodes Incorporated. All Rights Reserved.

Ordering Information (continued) (Note 6)

Product Name	Package	Part Number	Marking ID	Packing	
				Qty.	Carrier
AP9101C	SOT26	AP9101CK6-AYTRG1	GPV	3000	Tape & Reel
		AP9101CK6-AZTRG1	GPW	3000	Tape & Reel
		AP9101CK6-BATRG1	GXA	3000	Tape & Reel
		AP9101CK6-BBTRG1	GXB	3000	Tape & Reel
		AP9101CK6-BCTRG1	GXC	3000	Tape & Reel
		AP9101CK6-BDTRG1	GXD	3000	Tape & Reel
		AP9101CK6-BETRG1	GXE	3000	Tape & Reel
		AP9101CK6-BFTRG1	GXF	3000	Tape & Reel
		AP9101CK6-BGTRG1	GXG	3000	Tape & Reel
		AP9101CK6-BHTRG1	GXH	3000	Tape & Reel
		AP9101CK6-BITRG1	GXJ	3000	Tape & Reel
		AP9101CK6-BJTRG1	GXK	3000	Tape & Reel
		AP9101CK6-BKTRG1	GXL	3000	Tape & Reel
		AP9101CK6-BLTRG1	GXM	3000	Tape & Reel
		AP9101CK6-BMTRG1	GXN	3000	Tape & Reel
		AP9101CK6-BNTRG1	GXP	3000	Tape & Reel
		AP9101CK6-BOTRG1	GXQ	3000	Tape & Reel
		AP9101CK6-BPTRG1	GXR	3000	Tape & Reel
		AP9101CK6-BQTRG1	GXS	3000	Tape & Reel
		AP9101CK6-BRTRG1	GXT	3000	Tape & Reel
		AP9101CK6-BSTRG1	GXU	3000	Tape & Reel
		AP9101CK6-BTTRG1	GXZ	3000	Tape & Reel
		AP9101CK6-BUTRG1	GXV	3000	Tape & Reel
		AP9101CK6-BVTRG1	GXW	3000	Tape & Reel
		AP9101CK6-BWTRG1	GYS	3000	Tape & Reel
		AP9101CK6-BXTRG1	GYT	3000	Tape & Reel
		AP9101CK6-BYTRG1	GYU	3000	Tape & Reel
		AP9101CK6-BZTRG1	GYV	3000	Tape & Reel
		AP9101CK6-CATRG1	GYA	3000	Tape & Reel
		AP9101CK6-CBTRG1	GYB	3000	Tape & Reel
		AP9101CK6-CCTRG1	GYC	3000	Tape & Reel
		AP9101CK6-CDTRG1	GYD	3000	Tape & Reel
		AP9101CK6-CETRG1	GYE	3000	Tape & Reel
		AP9101CK6-CFTRG1	GYF	3000	Tape & Reel
		AP9101CK6-CGTRG1	GYG	3000	Tape & Reel
		AP9101CK6-CHTRG1	GYH	3000	Tape & Reel
		AP9101CK6-CITRG1	GYJ	3000	Tape & Reel

NOT RECOMMENDED FOR NEW DESIGN

Note: 6. Current voltage versions are built by delay time option 1. If any other voltage versions or delay time option products are needed, please contact with the local sale's office.

© 2023 Copyright Diodes Incorporated. All Rights Reserved.

Ordering Information (continued) (Note 6)

Product Name	Package	Part Number	Marking ID	Packing	
				Qty.	Carrier
AP9101C	SOT26	AP9101CK6-CJTRG1	GYK	3000	Tape & Reel
		AP9101CK6-CKTRG1	GYL	3000	Tape & Reel
		AP9101CK6-CLTRG1	GYM	3000	Tape & Reel
		AP9101CK6-CMTRG1	GYN	3000	Tape & Reel
		AP9101CK6-CNTRG1	GYP	3000	Tape & Reel
		AP9101CK6-COTRG1	GYQ	3000	Tape & Reel
		AP9101CK6-CPTRG1	GYR	3000	Tape & Reel
		AP9101CK6-CQTRG1	GYW	3000	Tape & Reel
		AP9101CK6-DUTRG1	GUJ	3000	Tape & Reel
		AP9101CAK6-AATRG1	GRB	3000	Tape & Reel
		AP9101CAK6-ABTRG1	GRC	3000	Tape & Reel
		AP9101CAK6-ACTRG1	GTJ	3000	Tape & Reel
		AP9101CAK6-ADTRG1	GTK	3000	Tape & Reel
		AP9101CAK6-AETRG1	GRE	3000	Tape & Reel
		AP9101CAK6-AFTRG1	GTL	3000	Tape & Reel
		AP9101CAK6-AGTRG1	GTM	3000	Tape & Reel
		AP9101CAK6-AHTRG1	GTN	3000	Tape & Reel
		AP9101CAK6-AITRG1	GTP	3000	Tape & Reel
		AP9101CAK6-AJTRG1	GTQ	3000	Tape & Reel
		AP9101CAK6-AKTRG1	GRH	3000	Tape & Reel
		AP9101CAK6-ALTRG1	GTR	3000	Tape & Reel
		AP9101CAK6-AMTRG1	GTS	3000	Tape & Reel
		AP9101CAK6-ANTRG1	GSU	3000	Tape & Reel
		AP9101CAK6-AOTRG1	GTU	3000	Tape & Reel
		AP9101CAK6-ASTRG1	GTW	3000	Tape & Reel
		AP9101CAK6-ATTRG1	GTV	3000	Tape & Reel
		AP9101CAK6-AUTRG1	GUT	3000	Tape & Reel
		AP9101CAK6-AXTRG1	GUU	3000	Tape & Reel
		AP9101CAK6-AYTRG1	GUV	3000	Tape & Reel
		AP9101CAK6-AZTRG1	GUW	3000	Tape & Reel
		AP9101CAK6-BATRG1	GVA	3000	Tape & Reel
		AP9101CAK6-BBTRG1	GVB	3000	Tape & Reel
		AP9101CAK6-BCTRG1	GVC	3000	Tape & Reel
		AP9101CAK6-BDTRG1	GVD	3000	Tape & Reel
		AP9101CAK6-BETRG1	GVE	3000	Tape & Reel
		AP9101CAK6-BFTRG1	GVF	3000	Tape & Reel
		AP9101CAK6-BGTRG1	GVG	3000	Tape & Reel
		AP9101CAK6-BHTRG1	GVH	3000	Tape & Reel

Note: 6. Current voltage versions are built by delay time option 1. If any other voltage versions or delay time option products are needed, please contact with the local sale's office.

NOT RECOMMENDED FOR NEW DESIGN

© 2023 Copyright Diodes Incorporated. All Rights Reserved.

Ordering Information (continued) (Note 6)

Product Name	Package	Part Number	Marking ID	Packing	
				Qty.	Carrier
AP9101C	SOT26	AP9101CAK6-BITRG1	GVJ	3000	Tape & Reel
		AP9101CAK6-BJTRG1	GVK	3000	Tape & Reel
		AP9101CAK6-BKTRG1	GVL	3000	Tape & Reel
		AP9101CAK6-BLTRG1	GVM	3000	Tape & Reel
		AP9101CAK6-BMTRG1	GVN	3000	Tape & Reel
		AP9101CAK6-BNTRG1	GVP	3000	Tape & Reel
		AP9101CAK6-BOTRG1	GVQ	3000	Tape & Reel
		AP9101CAK6-BPTRG1	GVR	3000	Tape & Reel
		AP9101CAK6-BQTRG1	GVS	3000	Tape & Reel
		AP9101CAK6-BRTRG1	GVT	3000	Tape & Reel
		AP9101CAK6-BSTRG1	GVU	3000	Tape & Reel
		AP9101CAK6-BTTRG1	GVV	3000	Tape & Reel
		AP9101CAK6-BUTRG1	GVW	3000	Tape & Reel
		AP9101CAK6-BVTRG1	GWS	3000	Tape & Reel
		AP9101CAK6-BWTRG1	GWT	3000	Tape & Reel
		AP9101CAK6-BXTRG1	GWU	3000	Tape & Reel
		AP9101CAK6-BYTRG1	GWV	3000	Tape & Reel
		AP9101CAK6-BZTRG1	GWW	3000	Tape & Reel
		AP9101CAK6-CATRG1	GWA	3000	Tape & Reel
		AP9101CAK6-CBTRG1	GWB	3000	Tape & Reel
		AP9101CAK6-CCTRG1	GWC	3000	Tape & Reel
		AP9101CAK6-CDTRG1	GWD	3000	Tape & Reel
		AP9101CAK6-CETRG1	GWE	3000	Tape & Reel
		AP9101CAK6-CFTRG1	GWF	3000	Tape & Reel
		AP9101CAK6-CGTRG1	GWG	3000	Tape & Reel
		AP9101CAK6-CHTRG1	GWH	3000	Tape & Reel
		AP9101CAK6-CITRG1	GWJ	3000	Tape & Reel
		AP9101CAK6-CJTRG1	GWK	3000	Tape & Reel
		AP9101CAK6-CKTRG1	GWL	3000	Tape & Reel
		AP9101CAK6-CLTRG1	GWM	3000	Tape & Reel
		AP9101CAK6-CMTRG1	GWN	3000	Tape & Reel
		AP9101CAK6-CNTRG1	GWP	3000	Tape & Reel
		AP9101CAK6-COTRG1	GWQ	3000	Tape & Reel
		AP9101CAK6-CPTRG1	GWR	3000	Tape & Reel
		AP9101CAK6-DUTRG1	GUH	3000	Tape & Reel

NOT RECOMMENDED FOR NEW DESIGN

Note: 6. Current voltage versions are built by delay time option 1. If any other voltage versions or delay time option products are needed, please contact with the local sale's office.

© 2023 Copyright Diodes Incorporated. All Rights Reserved.

Marking Information

(Top View)

SOT25

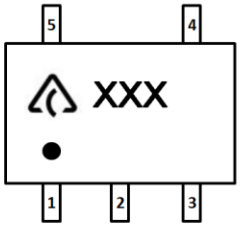

SOT26

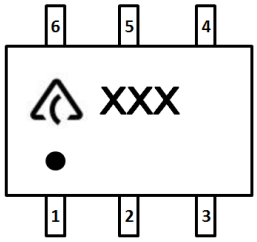

: Logo

XXX : Marking ID (See *Ordering Information*)

NOT RECOMMENDED FOR NEW DESIGN

© 2023 Copyright Diodes Incorporated. All Rights Reserved.

Package Outline Dimensions

Please see http://www.diodes.com/package-outlines.html for the latest version.

(1) Package Type: SOT25

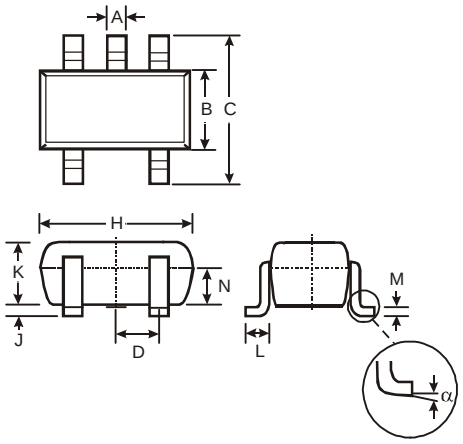

SOT25			
Dim	**Min**	**Max**	**Typ**
A	0.35	0.50	0.38
B	1.50	1.70	1.60
C	2.70	3.00	2.80
D	-	-	0.95
H	2.90	3.10	3.00
J	0.013	0.10	0.05
K	1.00	1.30	1.10
L	0.35	0.55	0.40
M	0.10	0.20	0.15
N	0.70	0.80	0.75
α	0°	8°	-
All Dimensions in mm			

(2) Package Type: SOT26

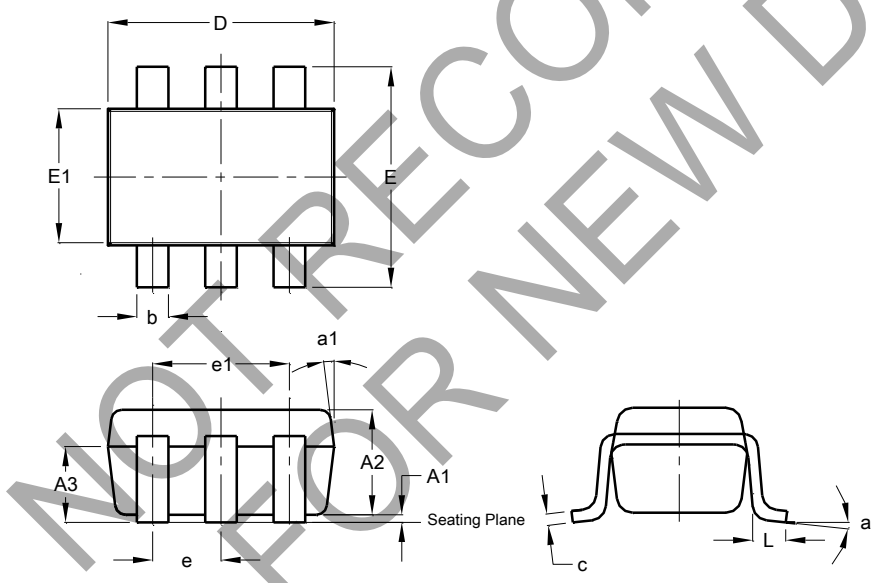

SOT26			
Dim	**Min**	**Max**	**Typ**
A1	0.013	0.10	0.05
A2	1.00	1.30	1.10
A3	0.70	0.80	0.75
b	0.35	0.50	0.38
c	0.10	0.20	0.15
D	2.90	3.10	3.00
e	-	-	0.95
e1	-	-	1.90
E	2.70	3.00	2.80
E1	1.50	1.70	1.60
L	0.35	0.55	0.40
a	-	-	8°
a1	-	-	7°
All Dimensions in mm			

NOT RECOMMENDED FOR NEW DESIGN

© 2023 Copyright Diodes Incorporated. All Rights Reserved.

Suggested Pad Layout

Please see http://www.diodes.com/package-outlines.html for the latest version.

(1) Package Type: SOT25

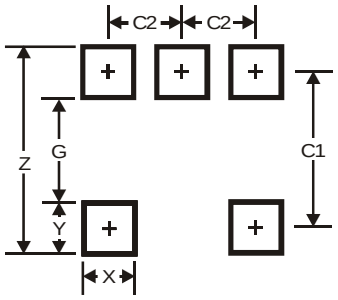

Dimensions	Value
Z	3.20
G	1.60
X	0.55
Y	0.80
C1	2.40
C2	0.95

(2) Package Type: SOT26

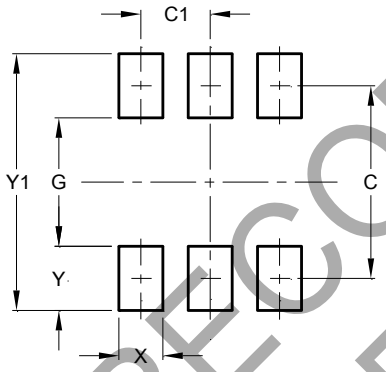

Dimensions	Value (in mm)
C	2.40
C1	0.95
G	1.60
X	0.55
Y	0.80
Y1	3.20

NOT RECOMMENDED FOR NEW DESIGN

© 2023 Copyright Diodes Incorporated. All Rights Reserved.

IMPORTANT NOTICE

1. DIODES INCORPORATED (Diodes) AND ITS SUBSIDIARIES MAKE NO WARRANTY OF ANY KIND, EXPRESS OR IMPLIED, WITH REGARDS TO ANY INFORMATION CONTAINED IN THIS DOCUMENT, INCLUDING, BUT NOT LIMITED TO, THE IMPLIED WARRANTIES OF MERCHANTABILITY, FITNESS FOR A PARTICULAR PURPOSE OR NON-INFRINGEMENT OF THIRD PARTY INTELLECTUAL PROPERTY RIGHTS (AND THEIR EQUIVALENTS UNDER THE LAWS OF ANY JURISDICTION).

2. The Information contained herein is for informational purpose only and is provided only to illustrate the operation of Diodes' products described herein and application examples. Diodes does not assume any liability arising out of the application or use of this document or any product described herein. This document is intended for skilled and technically trained engineering customers and users who design with Diodes' products. Diodes' products may be used to facilitate safety-related applications; however, in all instances customers and users are responsible for (a) selecting the appropriate Diodes products for their applications, (b) evaluating the suitability of Diodes' products for their intended applications, (c) ensuring their applications, which incorporate Diodes' products, comply the applicable legal and regulatory requirements as well as safety and functional-safety related standards, and (d) ensuring they design with appropriate safeguards (including testing, validation, quality control techniques, redundancy, malfunction prevention, and appropriate treatment for aging degradation) to minimize the risks associated with their applications.

3. Diodes assumes no liability for any application-related information, support, assistance or feedback that may be provided by Diodes from time to time. Any customer or user of this document or products described herein will assume all risks and liabilities associated with such use, and will hold Diodes and all companies whose products are represented herein or on Diodes' websites, harmless against all damages and liabilities.

4. Products described herein may be covered by one or more United States, international or foreign patents and pending patent applications. Product names and markings noted herein may also be covered by one or more United States, international or foreign trademarks and trademark applications. Diodes does not convey any license under any of its intellectual property rights or the rights of any third parties (including third parties whose products and services may be described in this document or on Diodes' website) under this document.

5. Diodes' products are provided subject to Diodes' Standard Terms and Conditions of Sale (https://www.diodes.com/about/company/terms-and-conditions/terms-and-conditions-of-sales/) or other applicable terms. This document does not alter or expand the applicable warranties provided by Diodes. Diodes does not warrant or accept any liability whatsoever in respect of any products purchased through unauthorized sales channel.

6. Diodes' products and technology may not be used for or incorporated into any products or systems whose manufacture, use or sale is prohibited under any applicable laws and regulations. Should customers or users use Diodes' products in contravention of any applicable laws or regulations, or for any unintended or unauthorized application, customers and users will (a) be solely responsible for any damages, losses or penalties arising in connection therewith or as a result thereof, and (b) indemnify and hold Diodes and its representatives and agents harmless against any and all claims, damages, expenses, and attorney fees arising out of, directly or indirectly, any claim relating to any noncompliance with the applicable laws and regulations, as well as any unintended or unauthorized application.

7. While efforts have been made to ensure the information contained in this document is accurate, complete and current, it may contain technical inaccuracies, omissions and typographical errors. Diodes does not warrant that information contained in this document is error-free and Diodes is under no obligation to update or otherwise correct this information. Notwithstanding the foregoing, Diodes reserves the right to make modifications, enhancements, improvements, corrections or other changes without further notice to this document and any product described herein. This document is written in English but may be translated into multiple languages for reference. Only the English version of this document is the final and determinative format released by Diodes.

8. Any unauthorized copying, modification, distribution, transmission, display or other use of this document (or any portion hereof) is prohibited. Diodes assumes no responsibility for any losses incurred by the customers or users or any third parties arising from any such unauthorized use.

9. This Notice may be periodically updated with the most recent version available at https://www.diodes.com/about/company/terms-and-conditions/important-notice

The Diodes logo is a registered trademark of Diodes Incorporated in the United States and other countries.
All other trademarks are the property of their respective owners.
© 2023 Diodes Incorporated. All Rights Reserved.

www.diodes.com

NOT RECOMMENDED FOR NEW DESIGN

© 2023 Copyright Diodes Incorporated. All Rights Reserved.

ENTEGRECİ

Bu belge www.entegreci.com üzerinden sunulmaktadır.

Elektronik komponent tedarikinde Entegreci

Entegreci, Eskişehir merkezli, Türkiye geneline satış yapan bir elektronik komponent mağazasıdır. Entegreler (IC), mikrodenetleyiciler, transistörler, diyotlar, pasif elemanlar, konnektörler, modüller ve geliştirme kartları tek adetten seri üretim adetlerine kadar satılır. Ürün sayfalarında güncel stok durumunu, fiyatı ve datasheet bağlantısını bulabilirsiniz.

Parça koduyla arama

Üretici parça numarasını yazın; stok ve fiyatı hemen görün.

www.entegreci.com

Ürün kategorileri

Entegreden kapasitöre tüm elektronik komponent kategorileri.

Kategorilere göz atın

Üreticiler

Aradığınız üreticinin ürünlerini tek sayfada inceleyin.

Üreticileri görün

Toplu alım ve teklif

Listede olmayan ya da yüksek adetli parçalar için teklif isteyin.

Teklif isteyin

www.entegreci.com | **destek@entegreci.com** | **0850 305 90 34**

Entegreci is an online electronic components store based in Türkiye. Search by manufacturer part number to see stock, prices and datasheets for integrated circuits, microcontrollers, transistors, passive components and connectors, or request a quote for parts that are not listed.

Bu sayfa Entegreci tarafından eklenmiştir. Belgenin önceki sayfaları asıl yayıncısına aittir ve içeriği değiştirilmemiştir; en güncel sürüm için belgenin yayıncısına başvurun.