Description

The AP4310E is a monolithic IC specifically designed to regulate the output current and voltage levels of switching battery chargers and power supplies.

The device contains two Op Amps and a 2.5V precision shunt voltage reference. Op Amp 1 is designed for voltage control with its non-inverting input internally connected to the output of the shunt regulator. Op Amp 2 is for current control with both inputs uncommitted. The IC offers the power converter designer a control solution that features increased precision with a corresponding reduction in system complexity and cost. The AP4310E has more stringent reference voltage tolerance and offset.

The AP4310E is available in the standard SO-8 package.

Pin Assignments

(Top View)

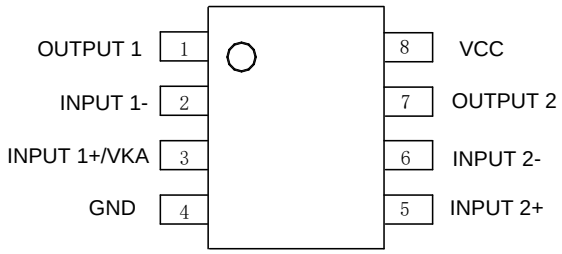

SO-8

Applications

- Battery chargers
- Switching power supplies

Features

- **OP Amp**
  - Input Offset Voltage: 0.5mV
  - Supply Current: 75μA per OP Amp at 5.0V Supply Voltage
  - Unity Gain Bandwidth:1MHz
  - Output Voltage Swing: 0 to V_{CC}-1.5V
  - Power Supply Range: 3 to 36V
- **Voltage Reference**
  - Fixed Output Voltage Reference: 2.5V
  - Reference Voltage Tolerance: ±0.4%
  - Sink Current Capability: 0.05 to 80mA
  - Typical Output Impedance: 0.2Ω
- **Totally Lead-free & Fully RoHS Compliant (Notes 1 & 2)**
- **Halogen and Antimony Free. "Green" Device (Note 3)**
- **For automotive applications requiring specific change control (i.e. parts qualified to AEC-Q100/101/104/200, PPAP capable, and manufactured in IATF 16949 certified facilities), please contact us or your local Diodes representative. https://www.diodes.com/quality/product-definitions/**

Notes:
1. No purposely added lead. Fully EU Directive 2002/95/EC (RoHS), 2011/65/EU (RoHS 2) & 2015/863/EU (RoHS 3) compliant.
2. See https://www.diodes.com/quality/lead-free/ for more information about Diodes Incorporated's definitions of Halogen- and Antimony-free, "Green" and Lead-free.
3. Halogen- and Antimony-free "Green" products are defined as those which contain <900ppm bromine, <900ppm chlorine (<1500ppm total Br + Cl) and <1000ppm antimony compounds.

© 2024 Copyright Diodes Incorporated. All Rights Reserved.

Typical Applications Circuit

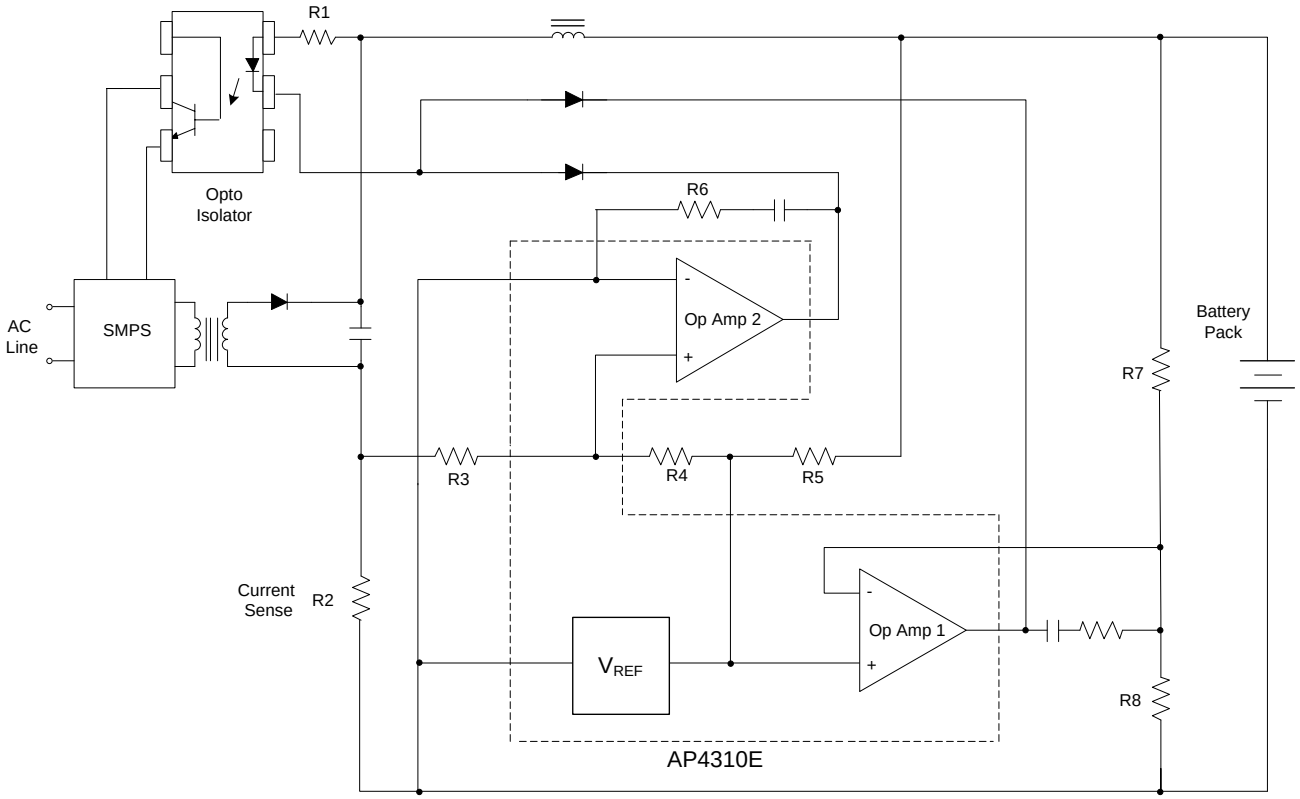

Application of AP4310E in a Constant Current and Constant Voltage Charger

Functional Block Diagram

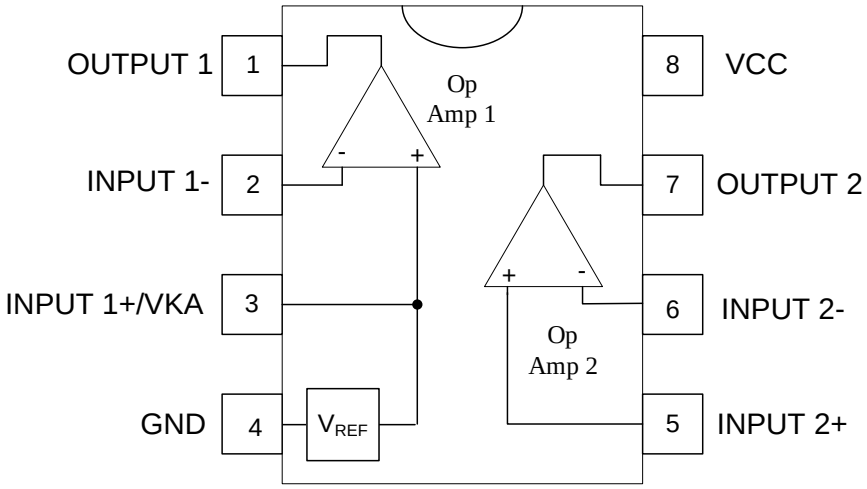

© 2024 Copyright Diodes Incorporated. All Rights Reserved.

Absolute Maximum Ratings (Note 4)

Symbol	Parameter	Rating	Unit
V_{CC}	Power Supply Voltage (VCC to GND)	40	V
V_{IN}	Op Amp1 and 2 Input Voltage Range (Pins 2, 5, 6)	-0.3 to V_{CC}+0.3	V
V_{ID}	Op Amp 2 Input Differential Voltage (Pins 5, 6)	40	V
I_K	Voltage Reference Cathode Current (Pin 3)	100	mA
P_D	Power Dissipation (T_A = +25°C)	500	mW
T_J	Operating Junction Temperature	+150	°C
T_{STG}	Storage Temperature Range	-65 to +150	°C
T_{LEAD}	Lead Temperature (Soldering 10sec)	+260	°C
ESD	Human Body Model	2000	V
ESD	Charged Device Model	1000	V

Note: 4. Stresses greater than those listed under *Absolute Maximum Ratings* can cause permanent damage to the device. These are stress ratings only, and functional operation of the device at these or any other conditions beyond those indicated under *Recommended Operating Conditions* is not implied. Exposure to *Absolute Maximum Ratings* for extended periods can affect device reliability.

Recommended Operating Conditions (Note 5)

Parameter	Min	Max	Unit
Supply Voltage	3	36	V
Ambient Temperature	-40	+105	°C

Note: 5. Qualified for SMD on the underside of a PCB by processing the PCB through a wave soldering operation.

Electrical Characteristics (@V_{CC} = 5V, T_A = +25°C, unless otherwise specified.)

Parameters	Conditions		Min	Typ	Max	Unit
Total Supply Current, excluding Current in Voltage Reference	V_{CC} = 5V, no load, -40°C ≤ T_A ≤ +105°C		—	0.15	0.25	mA
	V_{CC} = 30V, no load, -40°C ≤ T_A ≤ +105°C		—	0.20	0.30	
Voltage Reference Section						
Reference Voltage	I_K = 10mA	T_A = +25°C	2.49	2.50	2.51	V
		-40°C ≤ T_A ≤ +105°C	2.48	2.50	2.52	
Reference Voltage Deviation over Full Temperature Range	I_K = 10mA, T_A = -40°C to +105°C		—	5	24	mV
Minimum Cathode Current for Regulation	—		—	0.01	0.05	mA
Dynamic Impedance	I_K = 1mA to 80mA, f < 1kHz		—	0.2	0.5	Ω
Op Amp 1 Section (V_{CC} = 5V, V_O = 1.4V, T_A = +25°C, unless otherwise noted.)						
Input Offset Voltage	T_A = +25°C		—	0.5	3	mV
	T_A = -40°C to +105°C		—	—	5	
Input Offset Voltage Temperature Drift	T_A = -40°C to +105°C		—	7	—	μV/°C
Input Bias Current (Inverting Input Only)	T_A = +25°C		—	20	150	nA
Large Signal Voltage Gain	V_{CC} = 15V, R_L = 2kΩ, V_O = 1.4V to 11.4V		85	100	—	dB
Power Supply Rejection Ratio	V_{CC} = 5V to 30V		70	90	—	dB

© 2024 Copyright Diodes Incorporated. All Rights Reserved.

Electrical Characteristics (continued) (@V_{CC} = 5V, T_A = +25°C, unless otherwise specified.)

Parameters		Conditions	Min	Typ	Max	Unit
Output Current	Source	V_{CC} = 15V, V_{ID} = 1V, V_O = 2V	20	40	—	mA
	Sink	V_{CC} = 15V, V_{ID} = -1V, V_O = 2V	8	20	—	
Output Voltage Swing (High)		V_{CC} = 30V, R_L = 10kΩ, V_{ID} = 1V	27	28	—	V
Output Voltage Swing (Low)		V_{CC} = 30V, R_L = 10kΩ, V_{ID} = -1V	—	17	100	mV
Slew Rate		V_{CC} = 18V, R_L = 2kΩ, A_V = 1, V_{IN} = 0.5V to 2V, C_L = 100pF	0.2	0.5	—	V/μs
Unity Gain Bandwidth		V_{CC} = 30V, R_L = 2kΩ, C_L = 100pF	0.7	1.0	—	MHz
Op Amp 2 Section (V_{CC} = 5V, V_O = 1.4V, T_A = +25°C, unless otherwise noted.)						
Input Offset Voltage (Note 6)		T_A = +25°C, V_{CC} = 5V or 20V	—	0.5	2	mV
		T_A = -40°C to +105°C, V_{CC} = 5V or 20V	—	—	3	
Input Offset Voltage Temperature Drift		T_A = -40°C to +105°C	—	7	—	μV/°C
Input Offset Current		T_A = +25°C	—	2	30	nA
Input Bias Current		T_A = +25°C	—	20	150	nA
Input Voltage Range		V_{CC} = 0 to 36V	0	—	V_{CC}-1.5	V
Common Mode Rejection Ratio		T_A = +25°C, V_{CM} = 0 to 3.5V	70	85	—	dB
Large Signal Voltage Gain		V_{CC} = 15V, R_L = 2kΩ, V_O = 1.4V to 11.4V	85	100	—	dB
Power Supply Rejection Ratio		V_{CC} = 5V to 30V	70	90	—	dB
Output Current	Source	V_{CC} = 15V, V_{ID} = 1V, V_O = 2V	20	40	—	mA
	Sink	V_{CC} = 15V, V_{ID} = -1V, V_O = 2V	8	20	—	
Output Voltage Swing (High)		V_{CC} = 30V, R_L = 10kΩ, V_{ID} = 1V	27	28	—	V
Output Voltage Swing (Low)		V_{CC} = 30V, R_L = 10kΩ, V_{ID} = -1V	—	17	100	mV
Slew Rate		V_{CC} = 18V, R_L = 2kΩ, A_V = 1, V_{IN} = 0.5V to 2V, C_L = 100pF	0.2	0.5	—	V/μs
Unity Gain Bandwidth		V_{CC} = 30V, R_L = 2kΩ, C_L = 100pF	0.7	1.0	—	MHz

Note: 6. The full temperature feature is guaranteed by design.

© 2024 Copyright Diodes Incorporated. All Rights Reserved.

Performance Characteristics

Reference Voltage vs. Ambient Temperature

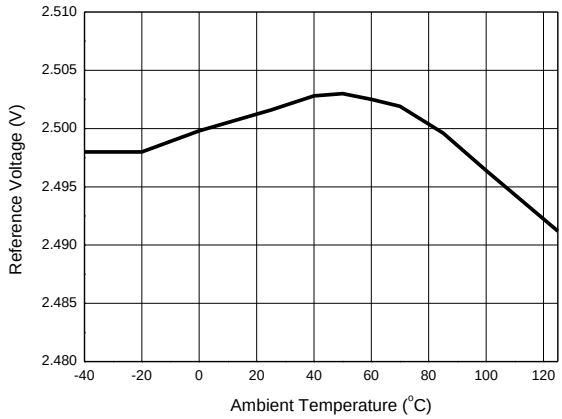

Cathode Current vs. Cathode Voltage

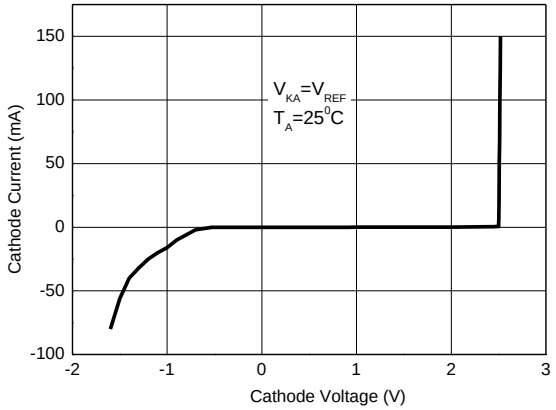

Input Bias Current vs. Ambient Temperature

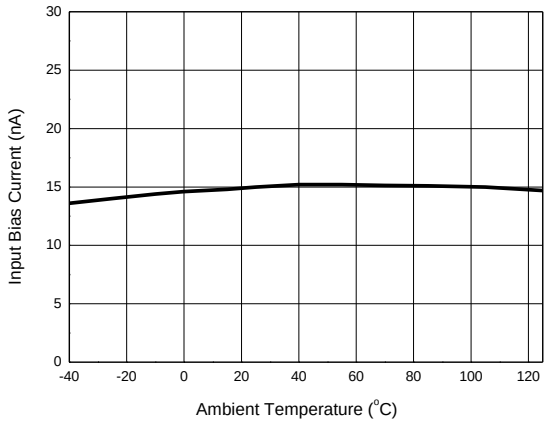

Op Amp Voltage Gain

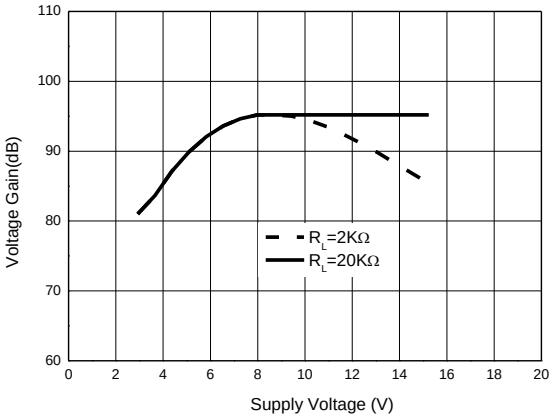

© 2024 Copyright Diodes Incorporated. All Rights Reserved.

Ordering Information

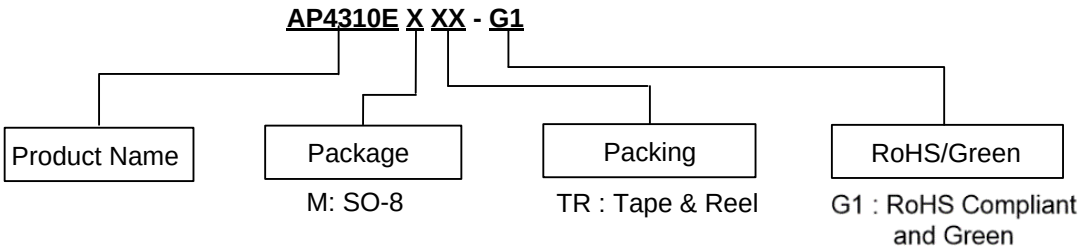

Part Number	Temperature Range	Reference Voltage	Voltage Tolerance	Marking ID	Package	Packing	
						Qty.	Carrier
AP4310EMTR-G1	-40 to +105°C	2.5V	±0.4%	AP4310EM-G1	SO-8	4,000	Tape & Reel

Marking Information

(Top View)

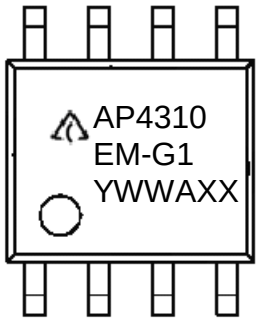

First and Second Lines: Logo and Marking ID
Third Line: Date Code
Y: Year (ex: 4 = 2024)
WW: Work Week of Molding (01 to 53)
A: Assembly House Code
XX: 7th and 8th Digits of Batch No.

© 2024 Copyright Diodes Incorporated. All Rights Reserved.

Package Outline Dimensions (All dimensions in mm (inch).)

Please see http://www.diodes.com/package-outlines.html for the latest version.

SO-8

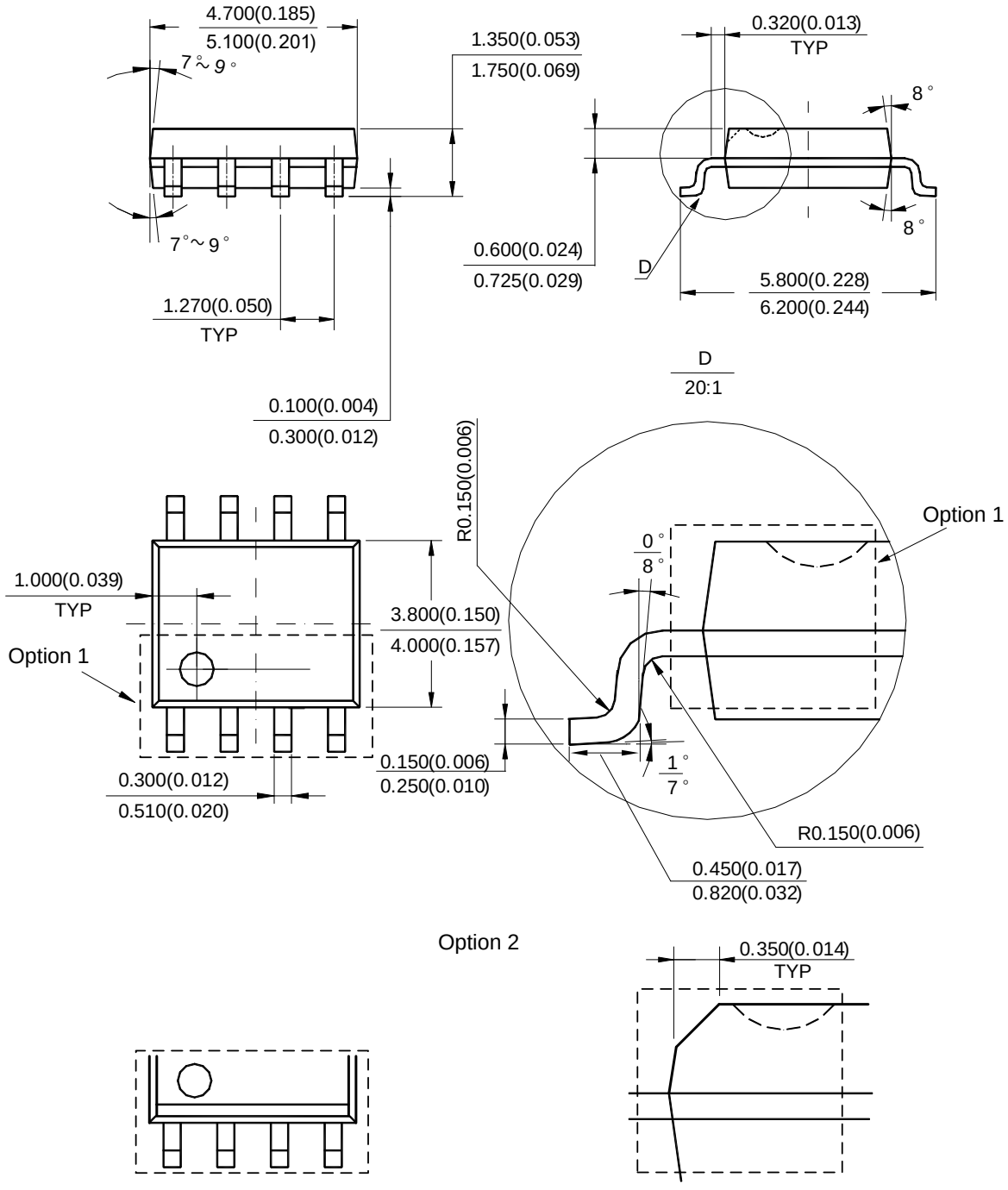

Note: Eject hole, oriented hole and mold mark is optional.

© 2024 Copyright Diodes Incorporated. All Rights Reserved.

Suggested Pad Layout

Please see http://www.diodes.com/package-outlines.html for the latest version.

SO-8

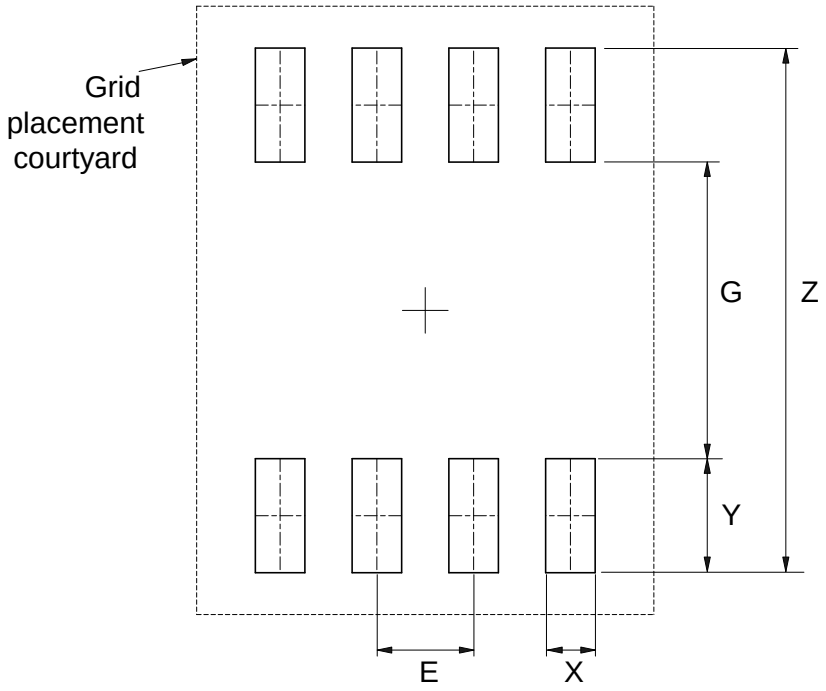

Dimensions	Z (mm)/(inch)	G (mm)/(inch)	X (mm)/(inch)	Y (mm)/(inch)	E (mm)/(inch)
Value	6.900/0.272	3.900/0.154	0.650/0.026	1.500/0.059	1.270/0.050

Mechanical Data

- Moisture Sensitivity: Level 1 per JESD22-A113
- Terminal Finish—Matte Tin Plated Leads; Solderable per JESD22-B102 e3
- Weight: 0.079 grams (Approximate)

© 2024 Copyright Diodes Incorporated. All Rights Reserved.

IMPORTANT NOTICE

1. DIODES INCORPORATED (Diodes) AND ITS SUBSIDIARIES MAKE NO WARRANTY OF ANY KIND, EXPRESS OR IMPLIED, WITH REGARDS TO ANY INFORMATION CONTAINED IN THIS DOCUMENT, INCLUDING, BUT NOT LIMITED TO, THE IMPLIED WARRANTIES OF MERCHANTABILITY, FITNESS FOR A PARTICULAR PURPOSE OR NON-INFRINGEMENT OF THIRD PARTY INTELLECTUAL PROPERTY RIGHTS (AND THEIR EQUIVALENTS UNDER THE LAWS OF ANY JURISDICTION).

2. The Information contained herein is for informational purpose only and is provided only to illustrate the operation of Diodes' products described herein and application examples. Diodes does not assume any liability arising out of the application or use of this document or any product described herein. This document is intended for skilled and technically trained engineering customers and users who design with Diodes' products. Diodes' products may be used to facilitate safety-related applications; however, in all instances customers and users are responsible for (a) selecting the appropriate Diodes products for their applications, (b) evaluating the suitability of Diodes' products for their intended applications, (c) ensuring their applications, which incorporate Diodes' products, comply the applicable legal and regulatory requirements as well as safety and functional-safety related standards, and (d) ensuring they design with appropriate safeguards (including testing, validation, quality control techniques, redundancy, malfunction prevention, and appropriate treatment for aging degradation) to minimize the risks associated with their applications.

3. Diodes assumes no liability for any application-related information, support, assistance or feedback that may be provided by Diodes from time to time. Any customer or user of this document or products described herein will assume all risks and liabilities associated with such use, and will hold Diodes and all companies whose products are represented herein or on Diodes' websites, harmless against all damages and liabilities.

4. Products described herein may be covered by one or more United States, international or foreign patents and pending patent applications. Product names and markings noted herein may also be covered by one or more United States, international or foreign trademarks and trademark applications. Diodes does not convey any license under any of its intellectual property rights or the rights of any third parties (including third parties whose products and services may be described in this document or on Diodes' website) under this document.

5. Diodes' products are provided subject to Diodes' Standard Terms and Conditions of Sale (https://www.diodes.com/about/company/terms-and-conditions/terms-and-conditions-of-sales/) or other applicable terms. This document does not alter or expand the applicable warranties provided by Diodes. Diodes does not warrant or accept any liability whatsoever in respect of any products purchased through unauthorized sales channel.

6. Diodes' products and technology may not be used for or incorporated into any products or systems whose manufacture, use or sale is prohibited under any applicable laws and regulations. Should customers or users use Diodes' products in contravention of any applicable laws or regulations, or for any unintended or unauthorized application, customers and users will (a) be solely responsible for any damages, losses or penalties arising in connection therewith or as a result thereof, and (b) indemnify and hold Diodes and its representatives and agents harmless against any and all claims, damages, expenses, and attorney fees arising out of, directly or indirectly, any claim relating to any noncompliance with the applicable laws and regulations, as well as any unintended or unauthorized application.

7. While efforts have been made to ensure the information contained in this document is accurate, complete and current, it may contain technical inaccuracies, omissions and typographical errors. Diodes does not warrant that information contained in this document is error-free and Diodes is under no obligation to update or otherwise correct this information. Notwithstanding the foregoing, Diodes reserves the right to make modifications, enhancements, improvements, corrections or other changes without further notice to this document and any product described herein. This document is written in English but may be translated into multiple languages for reference. Only the English version of this document is the final and determinative format released by Diodes.

8. Any unauthorized copying, modification, distribution, transmission, display or other use of this document (or any portion hereof) is prohibited. Diodes assumes no responsibility for any losses incurred by the customers or users or any third parties arising from any such unauthorized use.

9. This Notice may be periodically updated with the most recent version available at https://www.diodes.com/about/company/terms-and-conditions/important-notice

The Diodes logo is a registered trademark of Diodes Incorporated in the United States and other countries.
All other trademarks are the property of their respective owners.
© 2024 Diodes Incorporated. All Rights Reserved.

www.diodes.com

© 2024 Copyright Diodes Incorporated. All Rights Reserved.

ENTEGRECİ

Bu belge www.entegreci.com üzerinden sunulmaktadır.

Elektronik komponent tedarikinde Entegreci

Entegreci, Eskişehir merkezli, Türkiye geneline satış yapan bir elektronik komponent mağazasıdır. Entegreler (IC), mikrodenetleyiciler, transistörler, diyotlar, pasif elemanlar, konnektörler, modüller ve geliştirme kartları tek adetten seri üretim adetlerine kadar satılır. Ürün sayfalarında güncel stok durumunu, fiyatı ve datasheet bağlantısını bulabilirsiniz.

Parça koduyla arama

Üretici parça numarasını yazın; stok ve fiyatı hemen görün.

www.entegreci.com

Ürün kategorileri

Entegreden kapasitöre tüm elektronik komponent kategorileri.

Kategorilere göz atın

Üreticiler

Aradığınız üreticinin ürünlerini tek sayfada inceleyin.

Üreticileri görün

Toplu alım ve teklif

Listede olmayan ya da yüksek adetli parçalar için teklif isteyin.

Teklif isteyin

www.entegreci.com | **destek@entegreci.com** | **0850 305 90 34**

Entegreci is an online electronic components store based in Türkiye. Search by manufacturer part number to see stock, prices and datasheets for integrated circuits, microcontrollers, transistors, passive components and connectors, or request a quote for parts that are not listed.

Bu sayfa Entegreci tarafından eklenmiştir. Belgenin önceki sayfaları asıl yayıncısına aittir ve içeriği değiştirilmemiştir; en güncel sürüm için belgenin yayıncısına başvurun.