NEW PRODUCT

AP3766

LOW-POWER OFF-LINE PRIMARY SIDE REGULATION CONTROLLER

Description

The AP3766 is a high performance AC/DC power supply controller for LED drivers, battery charger and adapter applications. The device uses Pulse Frequency Modulation (PFM) method to build discontinuous conduction mode (DCM) flyback power supplies.

The AP3766 provides accurate constant voltage, constant current (CV/CC) regulation while removing the opto-coupler and secondary control circuitry. It also eliminates the need of loop compensation circuitry while maintaining stability. The AP3766 achieves excellent regulation and high average efficiency, yet meets the requirement for no-load consumption less than 30mW.

The AP3766 is available in SOT26 package.

Pin Assignments

(Top View)

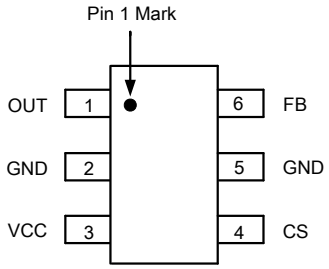

SOT26

Features

- Primary Side Control for Rectangular Constant Current and Constant Voltage Output
- Sub-microampere Start-up Current
- 30mW No-load Input Power Feasible
- Tight CC Regulation Performance
- Eliminates Opto-coupler and Secondary CV/CC Control Circuitry
- Eliminates Control Loop Compensation Circuitry
- Flyback Topology in DCM Operation
- Random Frequency Modulation to Reduce System EMI
- Built-in Soft Start
- Open Feedback Protection
- Short Circuit Protection
- SOT26 Package
- **Totally Lead-free & Fully RoHS Compliant (Notes 1 & 2)**
- **Halogen and Antimony Free. "Green" Device (Note 3)**

Applications

- LED Drivers
- Adapters/Chargers for Cell/Cordless Phones, PDAs, MP3 and Other Portable Apparatus
- Standby and Auxiliary Power Supplies

Notes:
1. No purposely added lead. Fully EU Directive 2002/95/EC (RoHS) & 2011/65/EU (RoHS 2) compliant.
2. See http://www.diodes.com/quality/lead_free.html for more information about Diodes Incorporated's definitions of Halogen- and Antimony-free, "Green" and Lead-free.
3. Halogen- and Antimony-free "Green" products are defined as those which contain <900ppm bromine, <900ppm chlorine (<1500ppm total Br + Cl) and <1000ppm antimony compounds.

Typical Applications Circuit

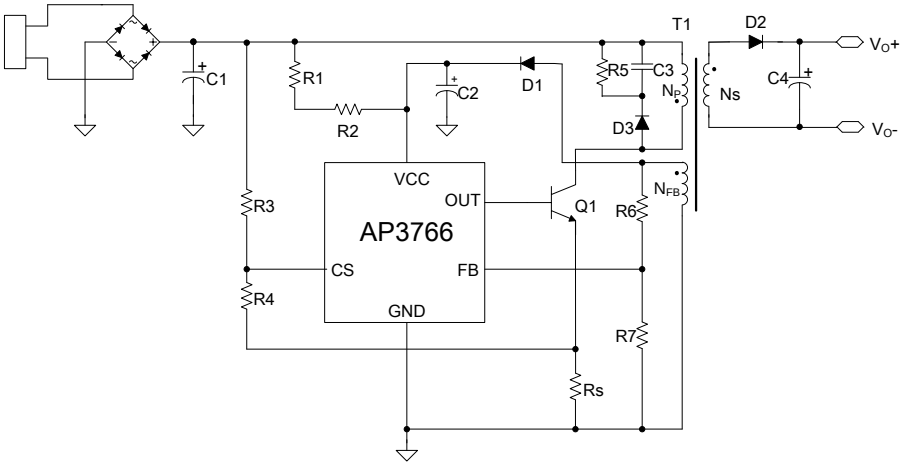

5V/700mA Output for Battery Charger of Mobile Phone

© Diodes Incorporated

NEW PRODUCT

Pin Descriptions

Pin Number	Pin Name	Function
1	OUT	This pin drives the base of external power NPN switch
2, 5	GND	Ground
3	VCC	Supply voltage
4	CS	The primary current sense
6	FB	The voltage feedback from the auxiliary winding

Functional Block Diagram

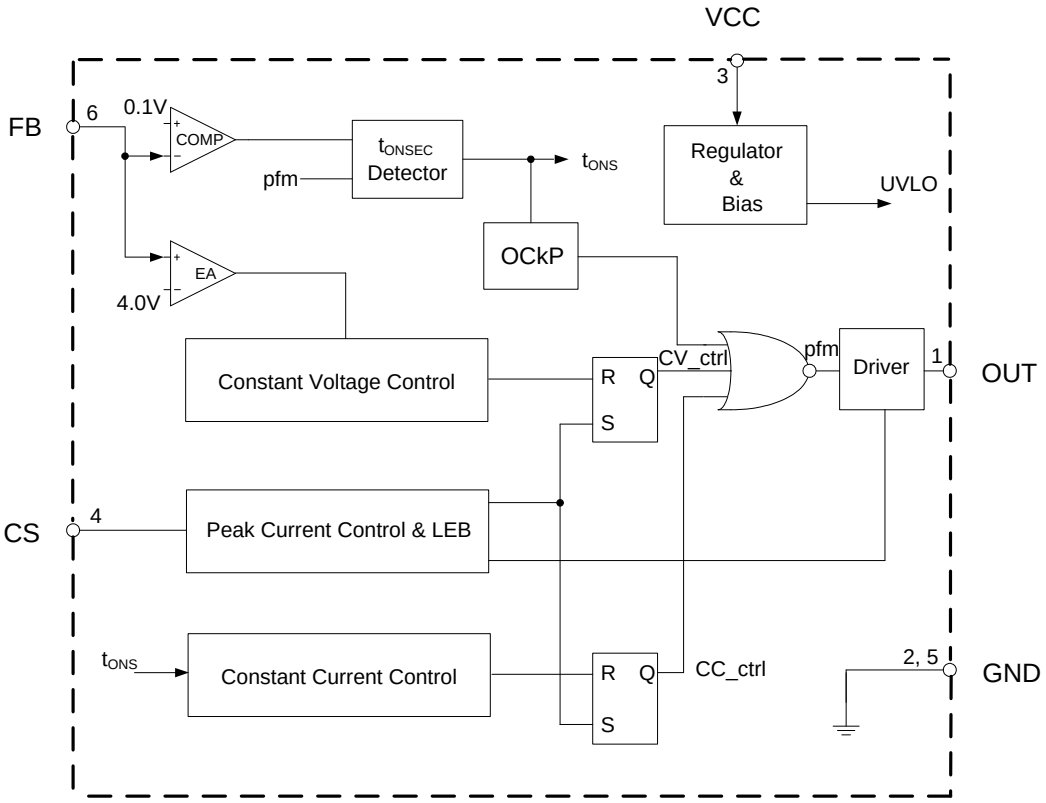

© Diodes Incorporated

NEW PRODUCT

Absolute Maximum Ratings (Note 4)

Parameter	Rating	Unit
Supply Voltage VCC	-0.3 to 36	V
Voltage at CS, OUT to GND	-0.3 to 7	V
FB Input	-40 to 10	V
Output Current at OUT	Internally limited	A
Operating Junction Temperature	+150	°C
Storage Temperature	-65 to +150	°C
Lead Temperature (Soldering, 10s)	+300	°C
Thermal Resistance Junction-to-Ambient	250	°C/W
ESD (Machine Model)	200	V
ESD (Human Body Model)	2000	V

Note 4: Stresses greater than those listed under "Absolute Maximum Ratings" may cause permanent damage to the device. These are stress ratings only, and functional operation of the device at these or any other conditions beyond those indicated under "Recommended Operating Conditions" is not implied. Exposure to "Absolute Maximum Ratings" for extended periods may affect device reliability.

Electrical Characteristics (V_{CC}=15V, T_A=+25°C, unless otherwise specified.)

Symbol	Parameter		Conditions	Min	Typ	Max	Unit
UVLO SECTION							
$V_{TH(ST)}$	Start-up Threshold		–	16	18.5	21	V
V_{OPR}(min)	Minimal Operating Voltage		–	7.2	9	10.2	V
STANDBY CURRENT SECTION							
I_{ST}	Start-up Current		V_{CC} = $V_{TH(ST)}$-0.5V, Before start-up	–	–	0.6	μA
$I_{CC(OPR)}$	Operating Current		Static	–	200	320	μA
DRIVE OUTPUT SECTION							
I_{OUT}	OUT Maximum Current	Sink	–	50	–	–	mA
		Source		24	30	36	
CURRENT SENSE SECTION							
V_{CS}	Current Sense Threshold		–	455	510	545	mV
$\frac{\Delta V_{CS,EQ}}{V_{CS,EQ}}$	Equivalent Current Sense Voltage Accuracy		Note 5	–	–	3	%
$V_{CS(PRE)}$	Pre-Current Sense		–	365	410	455	mV
–	Leading Edge Blanking		–	–	750	–	ns
FEEDBACK INPUT SECTION							
I_{FB}	Feedback Pin Input Leakage Current		V_{FB}=4V	2.0	2.5	3.1	μA
V_{FB}	Feedback Threshold		–	3.59	3.83	4.07	V

Note 5: The output current is given by $I_{OUT}=\frac{V_{CS,EQ}}{R_{CS}} x \frac{N_P}{N_S}$.

© Diodes Incorporated

NEW PRODUCT

Performance Characteristics

Start-up Voltage vs. Ambient Temperature

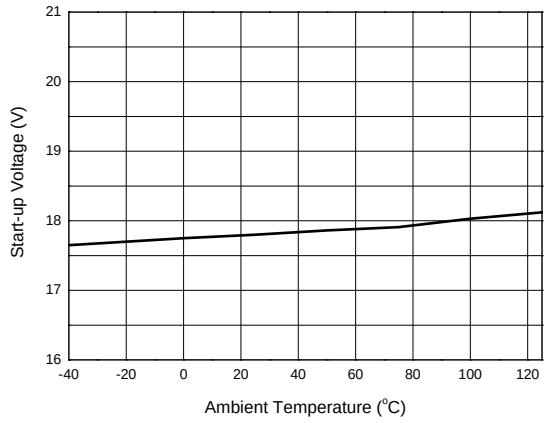

Minimal Operating Voltage vs. Ambient Temperature

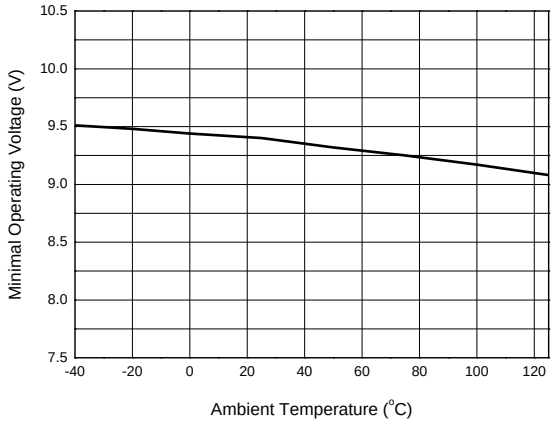

Operating Current vs. Ambient Temperature

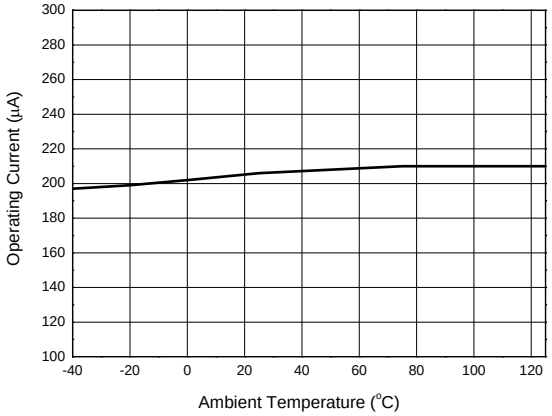

I_{FB} vs. Ambient Temperature

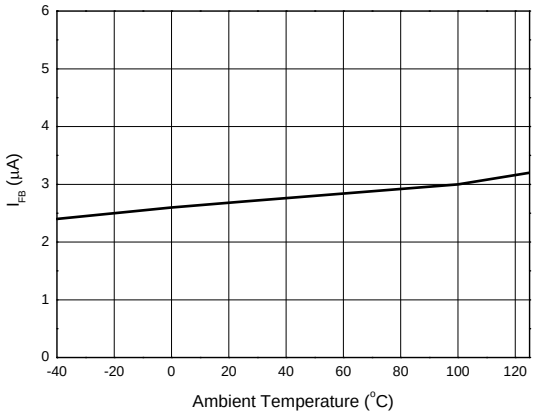

© Diodes Incorporated

NEW PRODUCT

Ordering Information

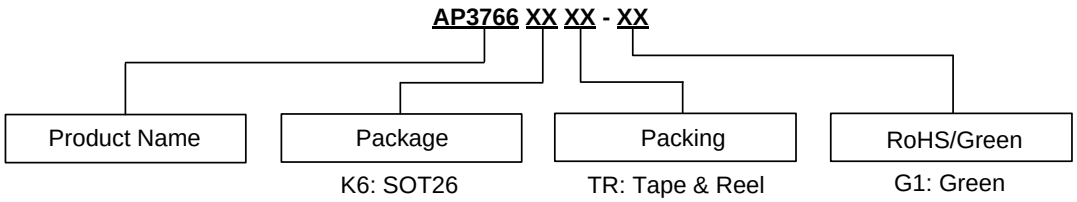

Package	Temperature Range	Part Number	Marking ID	Packing
SOT26	-40 to +105°C	AP3766K6TR-G1	GBF	3000/Tape & Reel

Marking Information

(Top View)

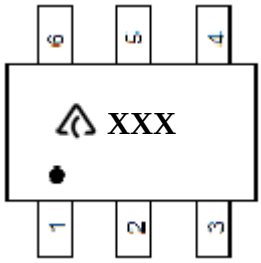

: Logo
XXX: Marking ID (See Ordering Information)

© Diodes Incorporated

NEW PRODUCT

Package Outline Dimensions (All dimensions in mm(inch).)

(1) Package Type: SOT26

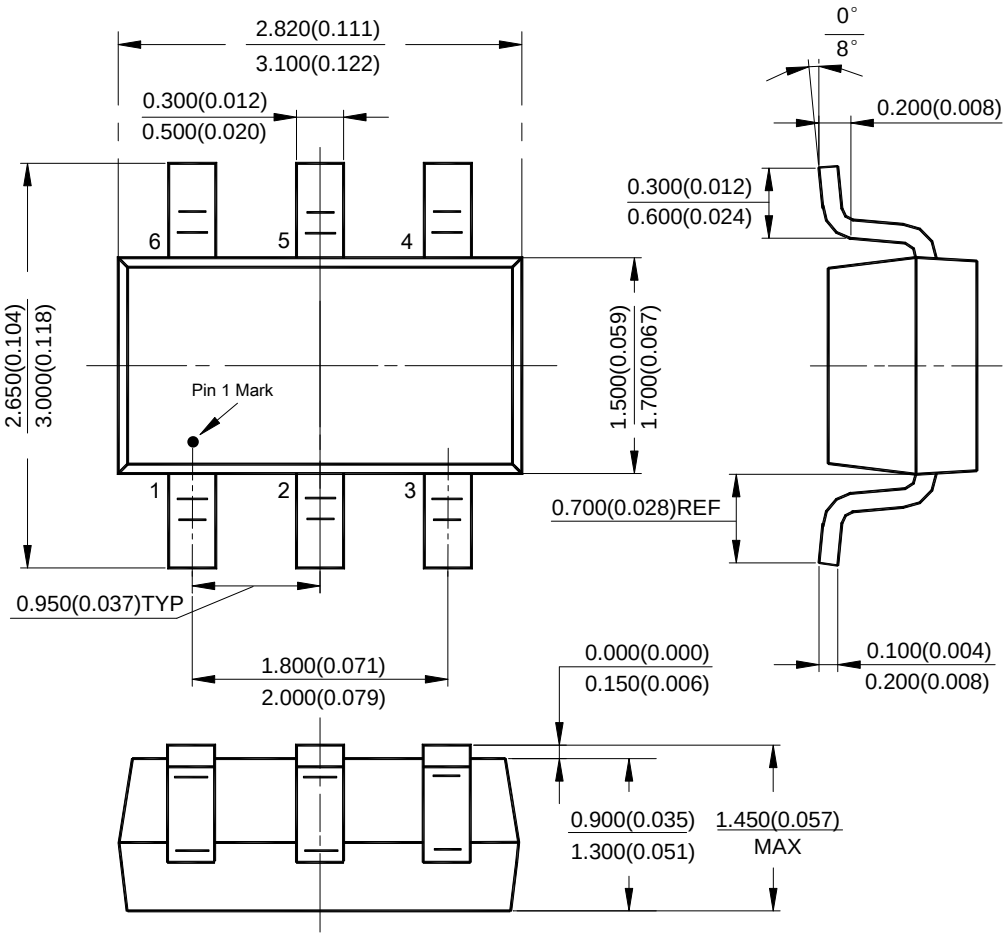

© Diodes Incorporated

NEW PRODUCT

Suggested Pad Layout

(1) Package Type: SOT26

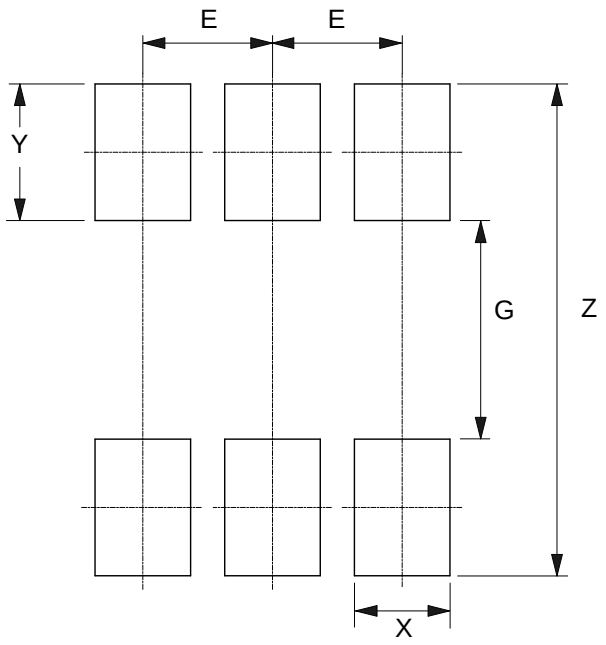

Dimensions	Z (mm)/(inch)	G (mm)/(inch)	X (mm)/(inch)	Y (mm)/(inch)	E (mm)/(inch)
Value	3.600/0.142	1.600/0.063	0.700/0.028	1.000/0.039	0.950/0.037

© Diodes Incorporated

NEW PRODUCT

IMPORTANT NOTICE

DIODES INCORPORATED MAKES NO WARRANTY OF ANY KIND, EXPRESS OR IMPLIED, WITH REGARDS TO THIS DOCUMENT, INCLUDING, BUT NOT LIMITED TO, THE IMPLIED WARRANTIES OF MERCHANTABILITY AND FITNESS FOR A PARTICULAR PURPOSE (AND THEIR EQUIVALENTS UNDER THE LAWS OF ANY JURISDICTION).

Diodes Incorporated and its subsidiaries reserve the right to make modifications, enhancements, improvements, corrections or other changes without further notice to this document and any product described herein. Diodes Incorporated does not assume any liability arising out of the application or use of this document or any product described herein; neither does Diodes Incorporated convey any license under its patent or trademark rights, nor the rights of others. Any Customer or user of this document or products described herein in such applications shall assume all risks of such use and will agree to hold Diodes Incorporated and all the companies whose products are represented on Diodes Incorporated website, harmless against all damages.

Diodes Incorporated does not warrant or accept any liability whatsoever in respect of any products purchased through unauthorized sales channel. Should Customers purchase or use Diodes Incorporated products for any unintended or unauthorized application, Customers shall indemnify and hold Diodes Incorporated and its representatives harmless against all claims, damages, expenses, and attorney fees arising out of, directly or indirectly, any claim of personal injury or death associated with such unintended or unauthorized application.

Products described herein may be covered by one or more United States, international or foreign patents pending. Product names and markings noted herein may also be covered by one or more United States, international or foreign trademarks.

This document is written in English but may be translated into multiple languages for reference. Only the English version of this document is the final and determinative format released by Diodes Incorporated.

LIFE SUPPORT

Diodes Incorporated products are specifically not authorized for use as critical components in life support devices or systems without the express written approval of the Chief Executive Officer of Diodes Incorporated. As used herein:

A. Life support devices or systems are devices or systems which:

1. are intended to implant into the body, or
2. support or sustain life and whose failure to perform when properly used in accordance with instructions for use provided in the labeling can be reasonably expected to result in significant injury to the user.

B. A critical component is any component in a life support device or system whose failure to perform can be reasonably expected to cause the failure of the life support device or to affect its safety or effectiveness.

Customers represent that they have all necessary expertise in the safety and regulatory ramifications of their life support devices or systems, and acknowledge and agree that they are solely responsible for all legal, regulatory and safety-related requirements concerning their products and any use of Diodes Incorporated products in such safety-critical, life support devices or systems, notwithstanding any devices- or systems-related information or support that may be provided by Diodes Incorporated. Further, Customers must fully indemnify Diodes Incorporated and its representatives against any damages arising out of the use of Diodes Incorporated products in such safety-critical, life support devices or systems.

Copyright © 2014, Diodes Incorporated

www.diodes.com

ENTEGRECİ

Bu belge www.entegreci.com üzerinden sunulmaktadır.

Elektronik komponent tedarikinde Entegreci

Entegreci, Eskişehir merkezli, Türkiye geneline satış yapan bir elektronik komponent mağazasıdır. Entegreler (IC), mikrodenetleyiciler, transistörler, diyotlar, pasif elemanlar, konnektörler, modüller ve geliştirme kartları tek adetten seri üretim adetlerine kadar satılır. Ürün sayfalarında güncel stok durumunu, fiyatı ve datasheet bağlantısını bulabilirsiniz.

Parça koduyla arama

Üretici parça numarasını yazın; stok ve fiyatı hemen görün.

www.entegreci.com

Ürün kategorileri

Entegreden kapasitöre tüm elektronik komponent kategorileri.

Kategorilere göz atın

Üreticiler

Aradığınız üreticinin ürünlerini tek sayfada inceleyin.

Üreticileri görün

Toplu alım ve teklif

Listede olmayan ya da yüksek adetli parçalar için teklif isteyin.

Teklif isteyin

www.entegreci.com | **destek@entegreci.com** | **0850 305 90 34**

Entegreci is an online electronic components store based in Türkiye. Search by manufacturer part number to see stock, prices and datasheets for integrated circuits, microcontrollers, transistors, passive components and connectors, or request a quote for parts that are not listed.

Bu sayfa Entegreci tarafından eklenmiştir. Belgenin önceki sayfaları asıl yayıncısına aittir ve içeriği değiştirilmemiştir; en güncel sürüm için belgenin yayıncısına başvurun.