Description

The AP3190P is a high-performance offline PSR AC/DC power supply controller. It is specially designed for the application that require the higher efficiency at light load and cost effectiveness.

Using the multi-mode control scheme, the AP3190P can also achieve high conversion efficiency with full load conditions.

At heavy load and low line, the AP3190P will operate in QR mode to achieve high performance. When the load decreasing, it will enter into fixed switching frequency operating mode. To optimize product performance, the fixed frequency is different in high line (60kHz) and low line (80kHz).

At light load or no load, the IC will operate in burst mode to minimize power consumption.

The AP3190P is designed to authorize a transient peak power excursion for peak load. It means the OCP reference can be increased to 1.75 times when the peak event disappears.

The AP3190P provides comprehensive protections without additional circuitry. It contains V_{CC} overvoltage protection, output overvoltage protection, output short circuit protection, etc.

The AP3190P has adjustable OTP by external NTC resistor. It consumes less than 65mW input power at no load condition with high line voltage.

The AP3190P is packaged in SOT26 (Type SM).

Features

- Burst Mode Operation for Light Load High Efficiency (at 10% Loading > 80%)
- A Transient Peak Power Excursion for Peak Load
- Primary Side Control for Eliminating Opto-Coupler
- 65mW No-Load Input Power
- Adjustable Over Temperature Protection
- Multiple QR/AM Mode to Improve Audio Noise and Efficiency
- QR for Higher Efficiency and Better EMI
- **Totally Lead-Free & Fully RoHS Compliant (Notes 1 & 2)**
- **Halogen and Antimony Free. "Green" Device (Note 3)**
- **For automotive applications requiring specific change control (i.e. parts qualified to AEC-Q100/101/104/200, PPAP capable, and manufactured in IATF 16949 certified facilities), please contact us or your local Diodes representative. https://www.diodes.com/quality/product-definitions/**

Pin Assignments

(Top View)

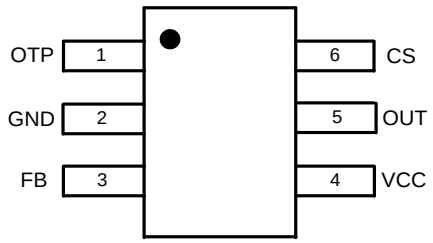

SOT26 (Type SM)

Applications

- IoT offline powers
- Smart speakers
- Set-top box power supplies
- Network adaptors

Notes:
1. No purposely added lead. Fully EU Directive 2002/95/EC (RoHS), 2011/65/EU (RoHS 2) & 2015/863/EU (RoHS 3) compliant.
2. See https://www.diodes.com/quality/lead-free/ for more information about Diodes Incorporated's definitions of Halogen- and Antimony-free, "Green" and Lead-free.
3. Halogen- and Antimony-free "Green" products are defined as those which contain <900ppm bromine, <900ppm chlorine (<1500ppm total Br + Cl) and <1000ppm antimony compounds.

© 2024 Copyright Diodes Incorporated. All Rights Reserved.

Typical Applications Circuit

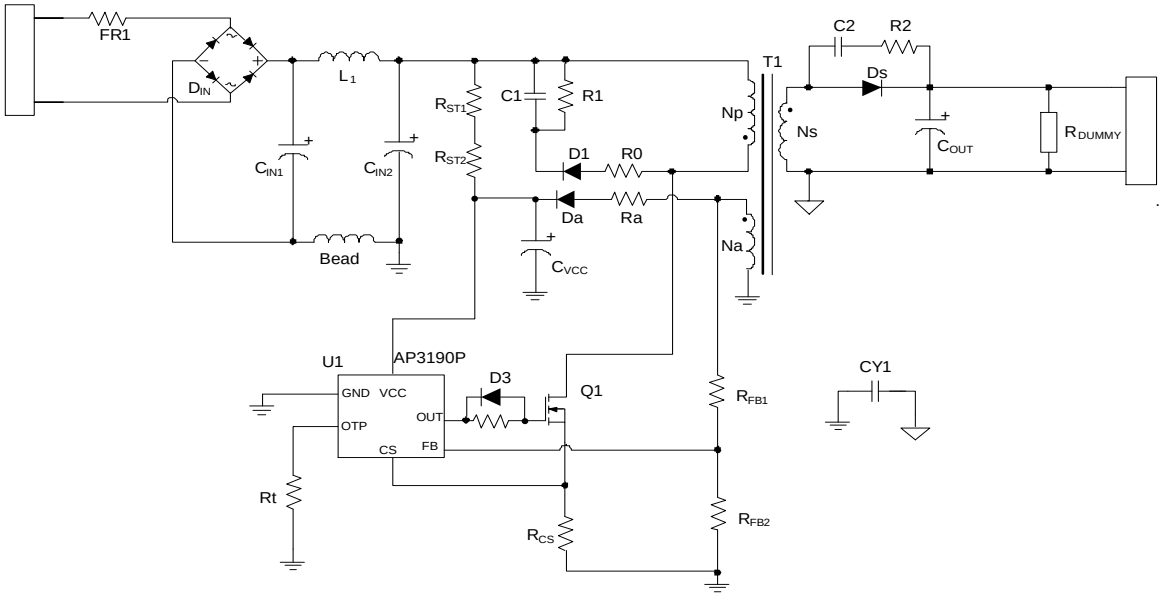

Pin Descriptions

Pin Number	Pin Name	Function
1	OTP	Adjustable over temperature protection by external NTC resistor
2	GND	The ground of the controller
3	FB	The CV and CC regulation are realized based on the voltage sampling of this pin.
4	VCC	The VCC pin supplies the power for the IC.
5	OUT	Output pin to drive external MOSFET
6	CS	The CS is the current sense pin of the IC. The IC will turn off the power MOSFET according to the voltage on the CS pin.

© 2024 Copyright Diodes Incorporated. All Rights Reserved.

Functional Block Diagram

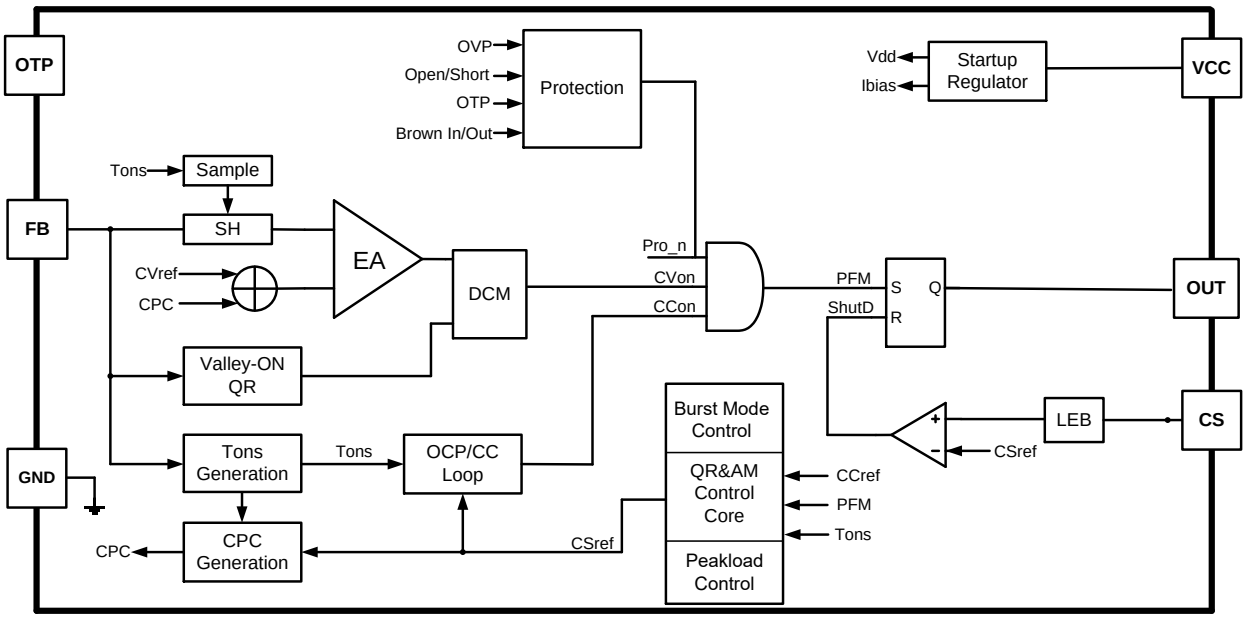

Absolute Maximum Ratings (Note 4)

Symbol	Parameter	Rating	Unit
V_{CC}	Supply Voltage	-0.3 to 33	V
V_{OUT}	Output Voltage	-0.3 to 15.7	V
V_{CS}	Input Voltage	-0.3 to 7.9	V
V_{FB}	FB Input Voltage	-0.3 to 7.9	V
T_J	Operating Junction Temperature	-40 to +150	°C
T_{STG}	Storage Temperature	-65 to +150	°C
T_{LEAD}	Lead Temperature (Soldering, 10s)	+300	°C
θ_{JC}	Thermal Resistance (Junction to Case) (Note 5)	76	°C/W
θ_{JA}	Thermal Resistance (Junction to Ambient) (Note 5)	200	°C/W
—	ESD (Human Body Model)	4000	V
—	ESD (Charge Device Model)	1000	V

Notes: 4. Stresses greater than those listed under "*Absolute Maximum Ratings*" can cause permanent damage to the device. These are stress ratings only, and functional operation of the device at these or any other conditions beyond those indicated under "*Recommended Operating Conditions*" is not implied. Exposure to "*Absolute Maximum Ratings*" for extended periods can affect device reliability.
5. Test condition: Device mounted on FR-4 substrate PC board, 2oz copper, with 1inch pad layout.

© 2024 Copyright Diodes Incorporated. All Rights Reserved.

Recommended Operating Conditions

Symbol	Parameter	Min	Max	Unit
VCC	Supply Voltage	0	25	V
T_A	Ambient Temperature	-40	+85	°C

Electrical Characteristics (@V_{CC} = 15V, T_A = +25°C, unless otherwise specified.)

Symbol	Parameter	Condition	Min	Typ	Max	Unit
STARTUP AND UVLO SECTION						
V_{TH_ST}	Startup Threshold	—	13	15	17	V
$V_{OPR(MIN)}$	Minimum Operating Voltage	—	5.8	6.15	6.5	V
CURRENT SECTION						
I_{ST}	Startup Current	V_{CC} = V_{TH_ST}-1V before Startup	0.009	0.5	1.1	μA
I_{CC_OPR}	Operating Current	Static Current	396	450	502	μA
CURRENT SENSE SECTION						
V_{CS_H}	Maximum Current Sense Threshold Voltage at CV Mode	(Note 6)	968	1100	1232	mV
V_{CS_M}	Medium Current Sense Threshold Voltage at CV Mode	(Note 6)	642	730	818	mV
$V_{CS_MAX_BURST}$	The Maximum Current Sense Threshold Voltage at Burst Mode	(Note 6)	492	560	628	mV
$V_{CS_MIN_BURST}$	The Minimum Current Sense Threshold Voltage at Burst Mode	(Note 6)	316	360	403	mV
t_{LEB}	Leading Edge Blanking	—	198	275	352	ns
CONSTANT VOLTAGE SECTION						
V_{FB}	Feedback Threshold Voltage	Test @ 90% of I_{OUT}	2.7	2.74	2.784	V
R_{CABLE}	Cable Compensation Ratio	—	—	2.0	—	%
OVER CURRENT PROTECTION SECTION						
$V_{REF_CC_OCPL}$	Current Reference for OCPL	(Note 7)	0.427	0.45	0.473	V
R_{LINE_IC}	Fixed Line Compensation Resistor	—	158	173	189	Ω
T_{OCP}	OCP Delay Time	—	996	1030	1064	ms
PEAK LOAD PROTECTION SECTION						
$V_{REF_CC_PEAKLOAD}$	Current Reference for Peak Load	$V_{REF_CC_OCPL}$*1.75 (Note 7)	0.74	0.79	0.83	V
$T_{PEAKLOAD}$	Peak Load Protection Delay Time	—	48	50	52	ms
$V_{CS_CC_MAX}$	Maximum Current Sense Threshold Voltage at Peak Load	—	1.67	1.76	1.85	V

Notes: 6. Guaranteed by design and characterization.
7. V_{REF_CC} is the equivalent of output current (w/o contacting resistor introduced by testing).

© 2024 Copyright Diodes Incorporated. All Rights Reserved.

Electrical Characteristics (@V_{CC} = 15V, T_A = +25°C, unless otherwise specified.) (continued)

Symbol	Parameter	Condition	Min	Typ	Max	Unit
DRIVE SECTION (OUT Pin)						
I_{SOURCE_L}	Minimum Drive Current	—	7.9	10.8	13.8	mA
I_{SOURCE_H}	Maximum Drive Current	—	21.0	27.7	34.3	mA
R_{DS_ON}	—	—	3.4	3.75	4.1	Ω
MAXIMUM OPERATING FREQUENCY						
F_{SW_MAX}	Maximum Frequency at Low Line	F_{SW} During AM2	72	80	88	kHz
	Maximum Frequency at High Line	F_{SW} During AM2	54	60	66	kHz
SAMPLE TIME						
T_{SAMPLE_H}	Sample Time at tons	At Heavy Load (Note 6)	—	67	—	%
T_{SAMPLE_L}		At Light Load (Note 6)	—	51	—	
PROTECTION FUNCTION SECTION						
V_{CC_OVP}	—	—	29	30	31	V
V_{FB_OVP}	Overvoltage Protection	(Note 6)	—	3.5	—	V
V_{FB_SUVP}	Undervoltage Protection	—	1.617	1.65	1.683	V
t_{SUVP}	Delay Time for SUVP Protection	—	61	64	67	ms
V_{FB_SCP}	Short Circuit Protection	—	1.07	1.1	1.13	V
t_{SCP}	Delay Time for SCP Protection	—	26	27	28	ms
V_{FBNeg_H}	Brown in Point	(Note 6)	—	-45	—	mV
Internal T_{OTP}	Shutdown Temperature	(Note 6)	—	+150	—	°C
Internal T_{HYS}	Temperature Hysteresis	(Note 6)	—	+40	—	°C
V_{OTP}	External OTP Shutdown Threshold	—	0.48	0.5	0.52	V
V_{OTP_REC}	External OTP Recovery Threshold	—	0.72	0.75	0.78	V
I_{OTP}	External OTP Shutdown Current	—	91.5	100	110	μA

Note: 6. Guaranteed by design and characterization.

© 2024 Copyright Diodes Incorporated. All Rights Reserved.

Performance Characteristics

Startup Voltage vs. Temperature

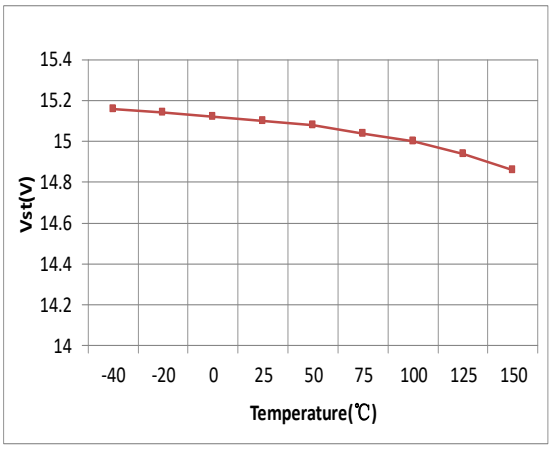

Start-Up Current vs. Ambient Temperature

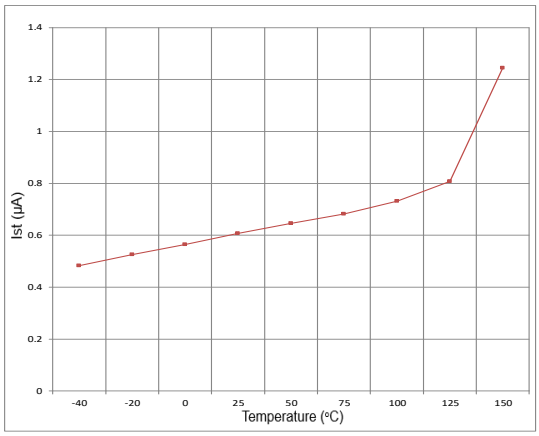

UVLO vs. Temperature

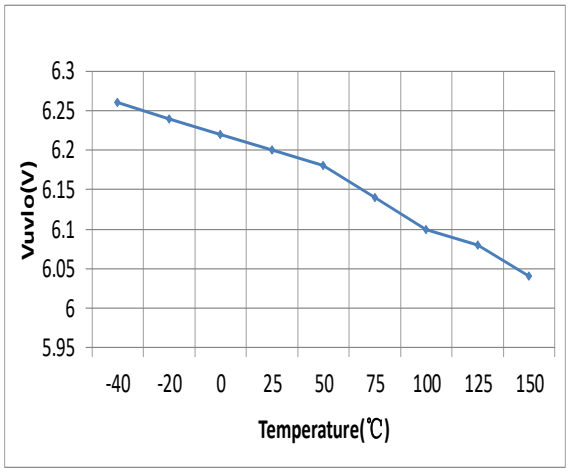

Operating Current vs. Ambient Temperature

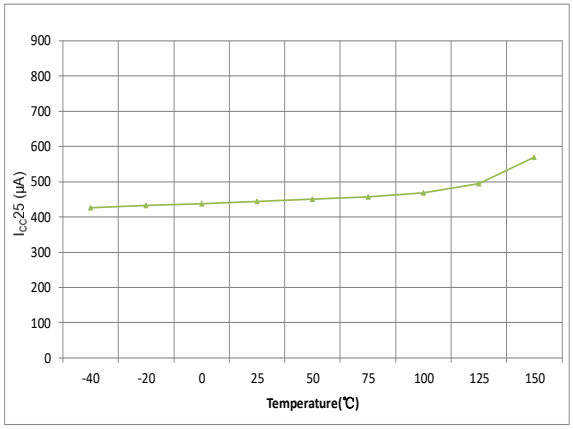

Feedback Voltage vs. Ambient Temperature

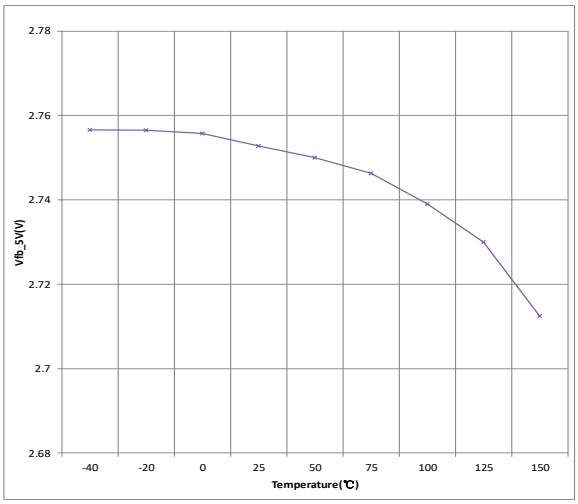

LEB vs. Ambient Temperature

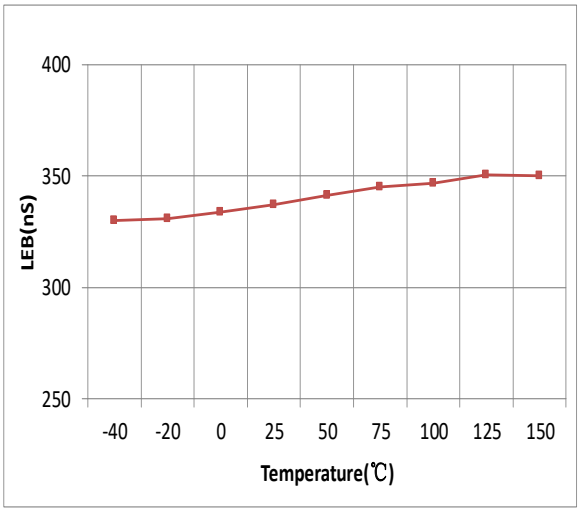

© 2024 Copyright Diodes Incorporated. All Rights Reserved.

Operation Description

Constant Voltage Operation

The AP3190P captures the auxiliary winding feedback voltage at FB pin and operates in constant-voltage (CV) mode to regulate the output voltage. Assuming the secondary winding is master, the auxiliary winding is slave during D_S's on-time. The auxiliary voltage is given by:

$$V_{AUX} = \frac{N_{AUX}}{N_S} \cdot (V_O + V_d) \cdots\cdots\cdots (1)$$

Where V_D is D_S forward drop voltage, N_{AUX} is the turns of auxiliary winding, and N_S is the turns of secondary winding.

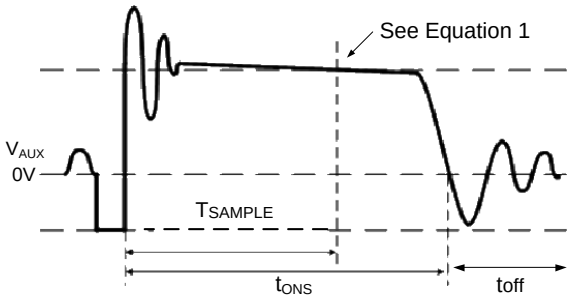

Figure 1. Auxiliary Voltage Waveform

The output voltage is different from the secondary voltage in a diode forward drop voltage V_D which depends on the current. If the secondary voltage is always detected at a constant secondary current, the difference between the output voltage and the secondary voltage will be a fixed V_D. The voltage detection point is at the T_{SAMPLE} of the D_S's on-time. The voltage detection point is changed with the different primary peak current. The CV loop control function of the AP3190P then generates a D_S's off-time to regulate the output voltage.

© 2024 Copyright Diodes Incorporated. All Rights Reserved.

Operation Description (continued)

Multi-Mode Operation

In CV control, the controller changes the mode of operation according to load condition. The switching frequency curve in Figure 2 shows operation modes. Proprietary CV control can achieve high precision CV control meeting most requirements.

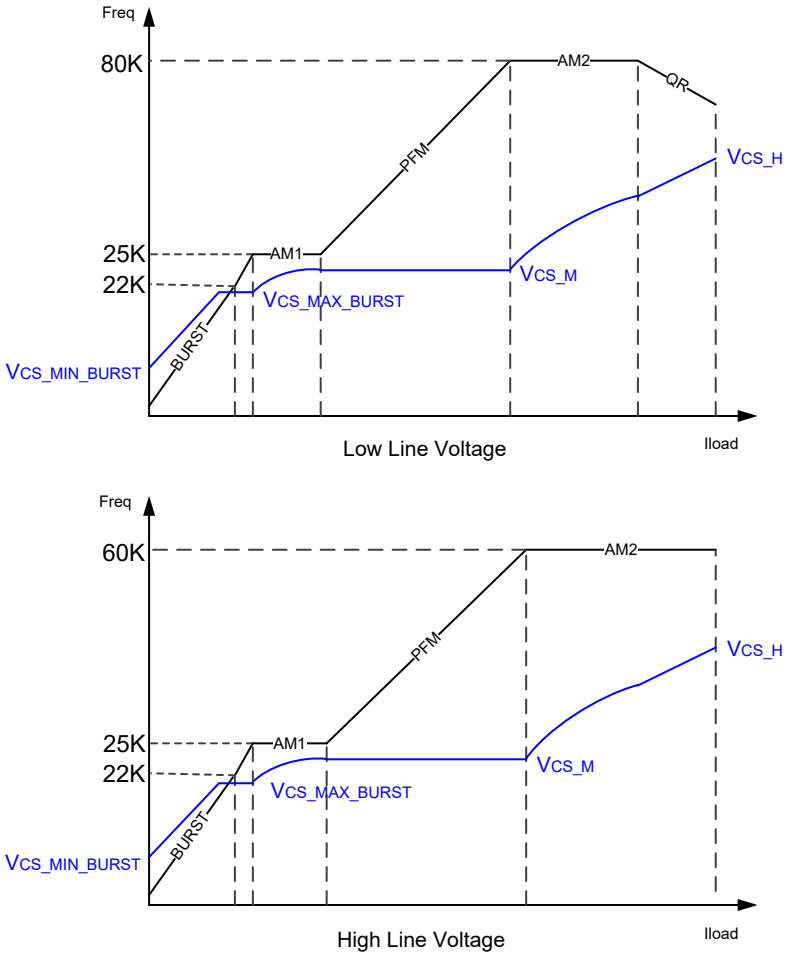

Figure 2. Multi-Mode Operation Diagram

© 2024 Copyright Diodes Incorporated. All Rights Reserved.

Operation Description (continued)

Burst Mode

To ensure a good system efficiency at light load, especially 10% of full load condition, the AP3190P operates in burst mode to get a lower switching power dissipation.

QR Mode

At low line and heavy load, if the t_{OFF} = 0, the AP3190P will operates in QR mode. QR is the abbreviation of Quasi-Resonant which is regarded as a soft switching technology. It means that the power MOSFET always turns on at the valley of the Drain-to-Source voltage (V_{DS}). Compared to traditional hard switching, QR switching-on can reduce the switching power loss of MOSFET and achieve good EMI behavior without additional BOM cost. The V_{DS} valley is detected by FB pin.

Overcurrent Protection (OCP)

The OCP section contains OCPL and Peak Load Protection.

The overcurrent protection circuit provides a relatively constant current limit across over the whole line voltage. As the output current of system reaches a defined set limit, the corresponding parameter will touch the internal overcurrent reference voltage ($V_{REF_CC_OCPL}$). If the overcurrent situation lasts continuously for 1030ms, an overcurrent protection circuit would be triggered and the system would enter into restart mode.

If the output current continues to rise up, the AP3190P would authorize a transient peak load with a highest OCP threshold ($V_{REF_CC_PEAKLOAD}$) for a period of 50ms. At the end of 50ms, the AP3190P will also enter into auto-restart status until the output current decrease below the peak load reference.

If the fault situation lasts less than the set-time 50ms, the IC will return to OCPL operation mode or CV regulation mode according to the load condition.

Figure 3 shows the secondary current waveforms.

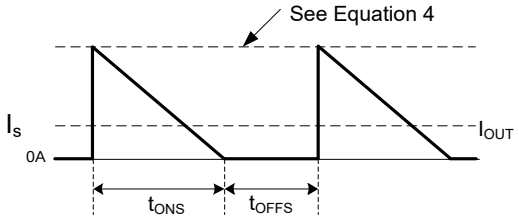

Figure 3. Secondary Current Waveform

In OCP operation, the AP3190P will keep a fixed produce of the V_{CS} and the proportion between the D_S's on-time t_{ONS} and its off-time t_{OFFS}. This fixed produce is called V_{REF_CC}:

$$V_{ref_cc} = V_{CS} \cdot \frac{t_{ONS}}{t_{ONS} + t_{OFFS}} \quad \text{..... (2)}$$

The relation between the overcurrent value I_{OCP} and secondary peak current I_{PKS} is given by:

$$I_{OCP} = \frac{1}{2} \times I_{PKS} \times \frac{t_{ONS}}{t_{ONS} + t_{OFFS}} \quad \text{..... (3)}$$

At the instant of D_S turn-on, the primary current transfers to the secondary at an amplitude of:

$$I_{PKS} = \frac{N_P}{N_S} \cdot I_{PK} \quad \text{..... (4)}$$

Thus the output overcurrent is given by:

$$I_{OCP} = \frac{1}{2} \cdot \frac{N_P}{N_S} \cdot \frac{1}{R_{CS}} \cdot V_{ref_cc} \quad \text{..... (5)}$$

© 2024 Copyright Diodes Incorporated. All Rights Reserved.

Operation Description (continued)

Leading Edge Blanking

When the power switch is turned on, a turn-on spike will occur on the sense-resistor. To avoid false-termination of the switching pulse, a 275ns leading-edge blanking (from power BJT or MOSFET on) is built in. During this blanking period, the current sense comparator is disabled and the gate driver can't be switched off.

Valley Turn-On

When the off time (t_{OFF}) is lower than t_{VAL-ON}, the AP3190P power system can work with valley turn-on. It can reduce BJT or MOSFET switching on power losses which is result from the equivalent output capacitance to achieve highest overall efficiency. At the same time, because of valley turn-on the switching frequency has the random jitter feature, which will be benefit for conductive EMI performance. And valley turn-on can also reduce the power switch turn-on spike current and then achieve a better radiated EMI performance.

Adjustable Line Compensation

Since there is a delay time from the CS pin voltage reaching the given V_{CS} reference to the power MOSFET turning off, the real primary peak current value always has a gap with the ideal value. The gap value changes with different input line voltage, which is caused by different current rising slope, results in different system constant current value.

In order to eliminate the constant current deviation due to line voltage, the adjustable line compensation is introduced to the AP3190P design. The negative voltage of FB pin which is linear to the line voltage is added up to V_{CS} reference by a certain proportion and creates an adjustable compensation voltage to clear up the primary current gap, so that the excellent line regulation of output current will be achieved.

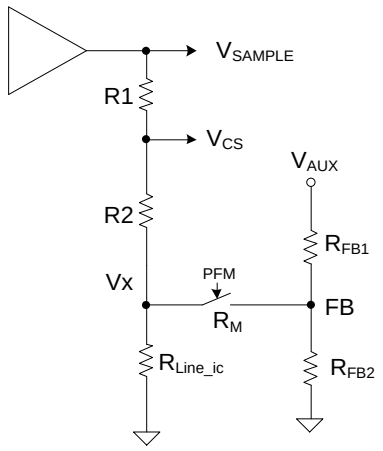

Figure 4. Adjustable Line Compensation Circuit

$$\Delta V_{CS} = -\frac{R_1}{R_1 + R_2} \cdot \frac{N_{AUX}}{N_P} \cdot \frac{R_{Line_ic}}{R_{LC} + R_M + R_{FB1}} \cdot V_{LINE} \quad \cdots\cdots\cdots (6)$$

Where:

R1 = 48kΩ, R2 = 288kΩ, R_M = 13Ω

So, the AP3190P can change the line compensation capability by adjusting the upper resistor at FB pin (R_{FB1}). Higher resistance means lower line compensation capability.

© 2024 Copyright Diodes Incorporated. All Rights Reserved.

Operation Description (continued)

Protection

The AP3190P has various built-in single-point fault protection features: For FB over voltage protection, VCC overvoltage protection and current sense open, the AP3190P will shut down if it detects fault for continuous 4 pulse. Output short circuit protection, current sense resistor short protection and over temperature protection will be described in detail below. The fault conditions to trigger these protections are different and all the protection modes to enter after the protections that are triggered are auto-recovery.

Short Circuit Protection (SCP)

Short Circuit Protection (SCP) detection principle is similar to the normal output voltage feedback detection by sensing FB pin voltage. When the detected FB pin voltage is below $V_{FB(SCP)}$ for a duration of about t_{SCP}, the SCP is triggered. Then the AP3190P enters hiccup mode that the IC immediately shuts down and then restarts, so that the VCC voltage changes between V_{TH_ST} and UVLO threshold until $V_{FB(SCP)}$ condition is removed.

As to the normal system startup, the time duration of FB pin voltage below $V_{FB(SCP)}$ should be less than T_{SCP} to avoid entering SCP mode. But for the output short condition or the output voltage below a certain level, the SCP mode should happen.

Brown In/Brown Out Protection

The AP3190P detects the bus voltage at each switching cycle through the minus voltage on FB pin during t_{ONP} period. When the VCC reaches V_{TH_ST} after power on, the AP3190P will output one switching pulse to check if the minus voltage on FB pin is lower than V_{FBNeg_H}. If yes, the system will start up normally. Otherwise, the AP3190P will stop outputting following pulses until the VCC drops below $V_{OPR(MIN)}$, and the system will repeat the above-described process.

The brown in protection only works at IC start up.

Once the IC start up normally, the AP3190P will change the protection reference from brown in (V_{FBNeg_H}) to brown out (V_{FBNeg_H}/3). Throughout the entire system operation process, the AP3190P detects the minus voltage on FB pin cycle by cycle. If the detected minus voltage on FB pin is higher than V_{FBNeg_H}/3 (-15mV) for 4 consecutive switching cycles, the AP3190P will shut down and enter auto recovery mode.

$$V_{FBNeg_H} = -\left(\frac{N_{AUX}}{N_P} \cdot V_{BUS} \cdot \frac{R_{LINE_IC}}{R_{LINE_IC} + R_{FB1}}\right)$$

CS Short Protection

The CS short protection reference (300mV) is a divider of V_{CS_H}, which is defined in datasheet.
The AP3190P detects the V_{CS} voltage 6.3μs after t_{ONP} beginning, if the voltage is lower than 300mV, the IC will enter CS short protection.
This protection only works at IC start up.

$$V_{CS} = I_{PK} \cdot R_{CS} = \frac{V_{BUS}}{L_P} \cdot T_{ONP} \cdot R_{CS}$$

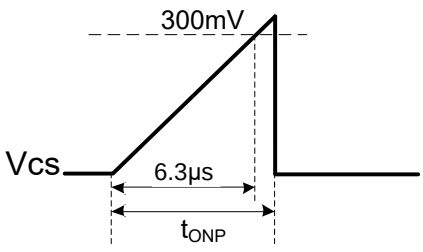

Figure 5. CS Short

Improper transformer design will leads to CS short protection & Brown in protection easily trigger.
So, if system design is proper, these two protections will not affect system's normal work.

© 2024 Copyright Diodes Incorporated. All Rights Reserved.

Operation Description (continued)

Over Temperature Protection (OTP)

External OTP

The AP3190P provides external over-temperature protection (OTP) by connecting a Negative-Temperature-Coefficient (NTC) resistor from OTP pin to GND. Internally, a 100μA current source is injected to the OTP pin, which generates a voltage proportional to the NTC resistance. At high ambient temperature, the NTC resistance becomes low, which results in a low voltage at the OTP pin. If the OTP pin voltage drops below an internally set threshold, then the OTP is triggered, and the AP3190P shuts down.

In the AP3190P, the external OTP has a built-in hysteresis by having two thresholds. The device will be shut down when the OTP pin voltage is less than 0.5V and will be recovered when the OTP pin voltage is higher than 0.75V.

During start-up and burst mode, the OTP function is disabled.

Internal OTP

If the IC junction temperature exceeds the threshold of +150°C, the AP3190P shuts down immediately and enters the hold mode. If the junction temperature decreases to hysteresis temperature of +110°C, the AP3190P can recover to normal operation. If not, the power system keeps the hold mode.

© 2024 Copyright Diodes Incorporated. All Rights Reserved.

Ordering Information

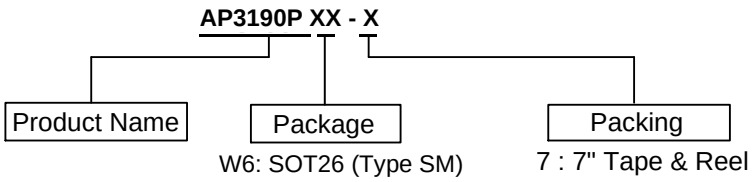

Orderable Part Number	Package	Marking ID	Packing	
			Qty.	Carrier
AP3190PW6-7	SOT26 (Type SM)	BP	3000	Tape & Reel

Marking Information

(Top View)

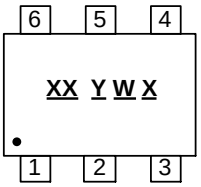

XX : Identification Code
Y : Year 0 to 9
W : Week : A to Z : 1 to 26 Week;
a to z : 27 to 52 Week; z Represents
52 and 53 Week
X : Internal Code

© 2024 Copyright Diodes Incorporated. All Rights Reserved.

Package Outline Dimensions

Please see http://www.diodes.com/package-outlines.html for the latest version.

SOT26 (Type SM)

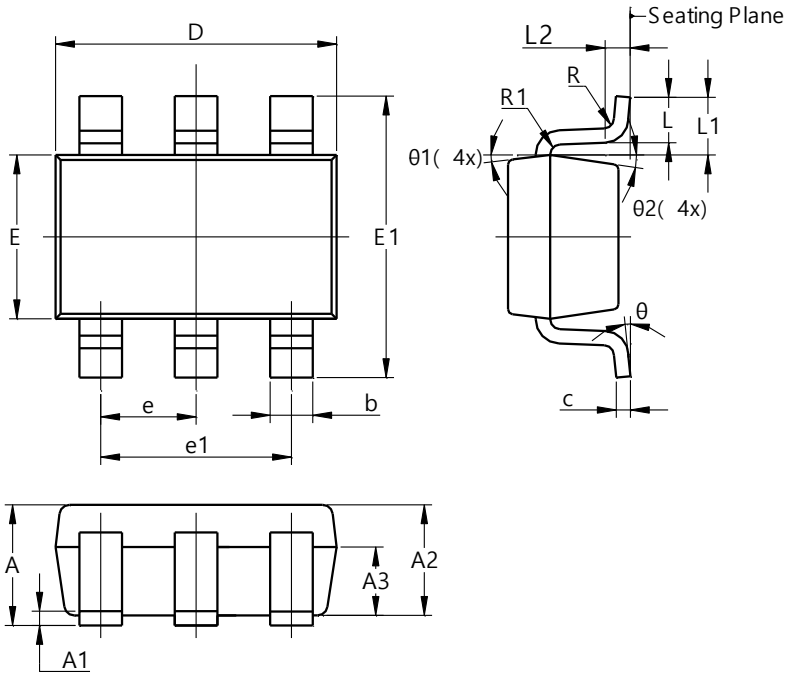

SOT26 (Type SM)			
Dim	**Min**	**Max**	**Typ**
A	--	1.45	--
A1	0.00	0.15	--
A2	0.90	1.30	1.10
A3	0.60	0.70	0.65
b	0.39	0.49	--
c	0.12	0.19	--
D	2.85	3.05	2.95
E	1.55	1.75	1.65
E1	2.60	3.00	2.80
e	0.85	1.05	0.95
e1	1.80	2.00	1.90
L	0.35	0.60	0.45
L1	0.59REF		
L2	0.25BSC		
R	0.05	--	--
R1	0.05	0.20	--
θ	0°	8°	--
θ1	8°	12°	10°
θ2	8°	12°	10°
All Dimensions in mm			

Suggested Pad Layout

Please see http://www.diodes.com/package-outlines.html for the latest version.

SOT26 (Type SM)

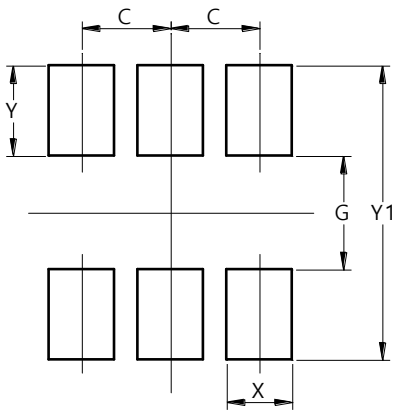

Dimensions	Value (in mm)
C	0.950
G	1.250
X	0.700
Y	0.975
Y1	3.200

Mechanical Data

- Moisture Sensitivity: Level 3 per JESD22-A113
- Terminals: Finish – Matte Tin Plated Leads, Solderable per JESD22-B102 e3
- Weight: 0.018 grams (Approximate)

© 2024 Copyright Diodes Incorporated. All Rights Reserved.

IMPORTANT NOTICE

1. DIODES INCORPORATED (Diodes) AND ITS SUBSIDIARIES MAKE NO WARRANTY OF ANY KIND, EXPRESS OR IMPLIED, WITH REGARDS TO ANY INFORMATION CONTAINED IN THIS DOCUMENT, INCLUDING, BUT NOT LIMITED TO, THE IMPLIED WARRANTIES OF MERCHANTABILITY, FITNESS FOR A PARTICULAR PURPOSE OR NON-INFRINGEMENT OF THIRD PARTY INTELLECTUAL PROPERTY RIGHTS (AND THEIR EQUIVALENTS UNDER THE LAWS OF ANY JURISDICTION).

2. The Information contained herein is for informational purpose only and is provided only to illustrate the operation of Diodes' products described herein and application examples. Diodes does not assume any liability arising out of the application or use of this document or any product described herein. This document is intended for skilled and technically trained engineering customers and users who design with Diodes' products. Diodes' products may be used to facilitate safety-related applications; however, in all instances customers and users are responsible for (a) selecting the appropriate Diodes products for their applications, (b) evaluating the suitability of Diodes' products for their intended applications, (c) ensuring their applications, which incorporate Diodes' products, comply the applicable legal and regulatory requirements as well as safety and functional-safety related standards, and (d) ensuring they design with appropriate safeguards (including testing, validation, quality control techniques, redundancy, malfunction prevention, and appropriate treatment for aging degradation) to minimize the risks associated with their applications.

3. Diodes assumes no liability for any application-related information, support, assistance or feedback that may be provided by Diodes from time to time. Any customer or user of this document or products described herein will assume all risks and liabilities associated with such use, and will hold Diodes and all companies whose products are represented herein or on Diodes' websites, harmless against all damages and liabilities.

4. Products described herein may be covered by one or more United States, international or foreign patents and pending patent applications. Product names and markings noted herein may also be covered by one or more United States, international or foreign trademarks and trademark applications. Diodes does not convey any license under any of its intellectual property rights or the rights of any third parties (including third parties whose products and services may be described in this document or on Diodes' website) under this document.

5. Diodes' products are provided subject to Diodes' Standard Terms and Conditions of Sale (https://www.diodes.com/about/company/terms-and-conditions/terms-and-conditions-of-sales/) or other applicable terms. This document does not alter or expand the applicable warranties provided by Diodes. Diodes does not warrant or accept any liability whatsoever in respect of any products purchased through unauthorized sales channel.

6. Diodes' products and technology may not be used for or incorporated into any products or systems whose manufacture, use or sale is prohibited under any applicable laws and regulations. Should customers or users use Diodes' products in contravention of any applicable laws or regulations, or for any unintended or unauthorized application, customers and users will (a) be solely responsible for any damages, losses or penalties arising in connection therewith or as a result thereof, and (b) indemnify and hold Diodes and its representatives and agents harmless against any and all claims, damages, expenses, and attorney fees arising out of, directly or indirectly, any claim relating to any noncompliance with the applicable laws and regulations, as well as any unintended or unauthorized application.

7. While efforts have been made to ensure the information contained in this document is accurate, complete and current, it may contain technical inaccuracies, omissions and typographical errors. Diodes does not warrant that information contained in this document is error-free and Diodes is under no obligation to update or otherwise correct this information. Notwithstanding the foregoing, Diodes reserves the right to make modifications, enhancements, improvements, corrections or other changes without further notice to this document and any product described herein. This document is written in English but may be translated into multiple languages for reference. Only the English version of this document is the final and determinative format released by Diodes.

8. Any unauthorized copying, modification, distribution, transmission, display or other use of this document (or any portion hereof) is prohibited. Diodes assumes no responsibility for any losses incurred by the customers or users or any third parties arising from any such unauthorized use.

9. This Notice may be periodically updated with the most recent version available at https://www.diodes.com/about/company/terms-and-conditions/important-notice

The Diodes logo is a registered trademark of Diodes Incorporated in the United States and other countries.
All other trademarks are the property of their respective owners.
© 2024 Diodes Incorporated. All Rights Reserved.

www.diodes.com

© 2024 Copyright Diodes Incorporated. All Rights Reserved.

ENTEGRECİ

Bu belge www.entegreci.com üzerinden sunulmaktadır.

Elektronik komponent tedarikinde Entegreci

Entegreci, Eskişehir merkezli, Türkiye geneline satış yapan bir elektronik komponent mağazasıdır. Entegreler (IC), mikrodenetleyiciler, transistörler, diyotlar, pasif elemanlar, konnektörler, modüller ve geliştirme kartları tek adetten seri üretim adetlerine kadar satılır. Ürün sayfalarında güncel stok durumunu, fiyatı ve datasheet bağlantısını bulabilirsiniz.

Parça koduyla arama

Üretici parça numarasını yazın; stok ve fiyatı hemen görün.

www.entegreci.com

Ürün kategorileri

Entegreden kapasitöre tüm elektronik komponent kategorileri.

Kategorilere göz atın

Üreticiler

Aradığınız üreticinin ürünlerini tek sayfada inceleyin.

Üreticileri görün

Toplu alım ve teklif

Listede olmayan ya da yüksek adetli parçalar için teklif isteyin.

Teklif isteyin

www.entegreci.com | **destek@entegreci.com** | **0850 305 90 34**

Entegreci is an online electronic components store based in Türkiye. Search by manufacturer part number to see stock, prices and datasheets for integrated circuits, microcontrollers, transistors, passive components and connectors, or request a quote for parts that are not listed.

Bu sayfa Entegreci tarafından eklenmiştir. Belgenin önceki sayfaları asıl yayıncısına aittir ve içeriği değiştirilmemiştir; en güncel sürüm için belgenin yayıncısına başvurun.