NEW PRODUCT

Description

The AP31251 is a current mode PWM controller which is optimized for high performance, low standby power and cost effective offline flyback converters.

The PWM switching frequency at normal operation is internally fixed (about 65kHz). In middle load, the IC will enter green mode to improve system efficiency with the help of frequency foldback. A minimum switching frequency (about 20kHz) is set to avoid the audible noise. In no load or light load, the IC will enter the burst mode to minimize standby power. Furthermore, the frequency dithering function is built-in to reduce EMI emission.

Internal slope compensation allows more stable Peak-Current Mode control over wide range of input voltage and load conditions. Internal line compensation ensures constant output power limit over entire universal line voltage range.

Comprehensive protection features are included, such as cycle-by-cycle current limit (OCP), V_{CC} Over Voltage Protection (VOVP), internal OTP, Over Load Protection (OLP) and pins' fault protection. The versatile latch functions can be implemented using a minimal number of external components.

Pin Assignments

(Top View)

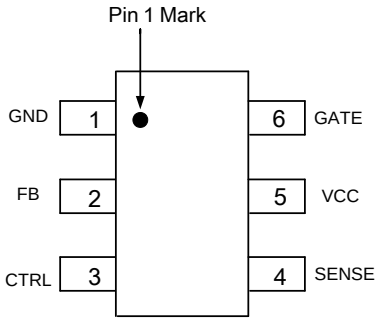

SOT26

Features

- Very Low Start-Up Current
- Current Mode Control
- Non-Audible-Noise Green-Mode Control
- Internal Slope Compensation
- Soft Start during Startup Process
- Frequency Fold Back for High Average Efficiency
- Secondary Winding Short Protection with FOCP
- Soft Switching (Soft Driver and Smart Jitter) for Reducing EMI
- V_{CC} Maintain Mode
- Useful Pin Fault Protection:
  SENSE Pin Floating
  CTRL Pin Short to Ground
  FB/Opto-Coupler Open/Short
- Comprehensive System Protection Feature:
  V_{CC} Over Voltage Protection (VOVP)
  Over Load Protection (OLP)
- Optional Latch Mode for VOVP, OLP and CTRL Pin Protection
- Mini Size Package of SOT26
- Pin to Pin Compatible with AP3105NA
- Moisture Sensitivity: MSL Level 3 per J-STD-020
- Terminals: Finish – Matte Sn Plated Leads, Solderable per M2003 JESD22-B102, Method 208 (e3)
- Weight: 0.016 grams (Approximate)
- **Totally Lead-Free & Fully RoHS Compliant (Notes 1 & 2)**
- **Halogen and Antimony Free. "Green" Device (Note 3)**
- **For automotive applications requiring specific change control (i.e. parts qualified to AEC-Q100/101/200, PPAP capable, and manufactured in IATF 16949 certified facilities), please contact us or your local Diodes representative. https://www.diodes.com/quality/product-definitions/**

Applications

- Switching AC-DC Adapter/Charger
- ATX/BTX Auxiliary Power
- Set-Top Box (STB) Power Supply
- Open Frame Switching Power Supply

Notes:
1. No purposely added lead. Fully EU Directive 2002/95/EC (RoHS), 2011/65/EU (RoHS 2) & 2015/863/EU (RoHS 3) compliant.
2. See https://www.diodes.com/quality/lead-free/ for more information about Diodes Incorporated's definitions of Halogen- and Antimony-free, "Green" and Lead-free.
3. Halogen- and Antimony-free "Green" products are defined as those which contain <900ppm bromine, <900ppm chlorine (<1500ppm total Br + Cl) and <1000ppm antimony compounds.

© Diodes Incorporated

NEW PRODUCT

Typical Applications Circuit

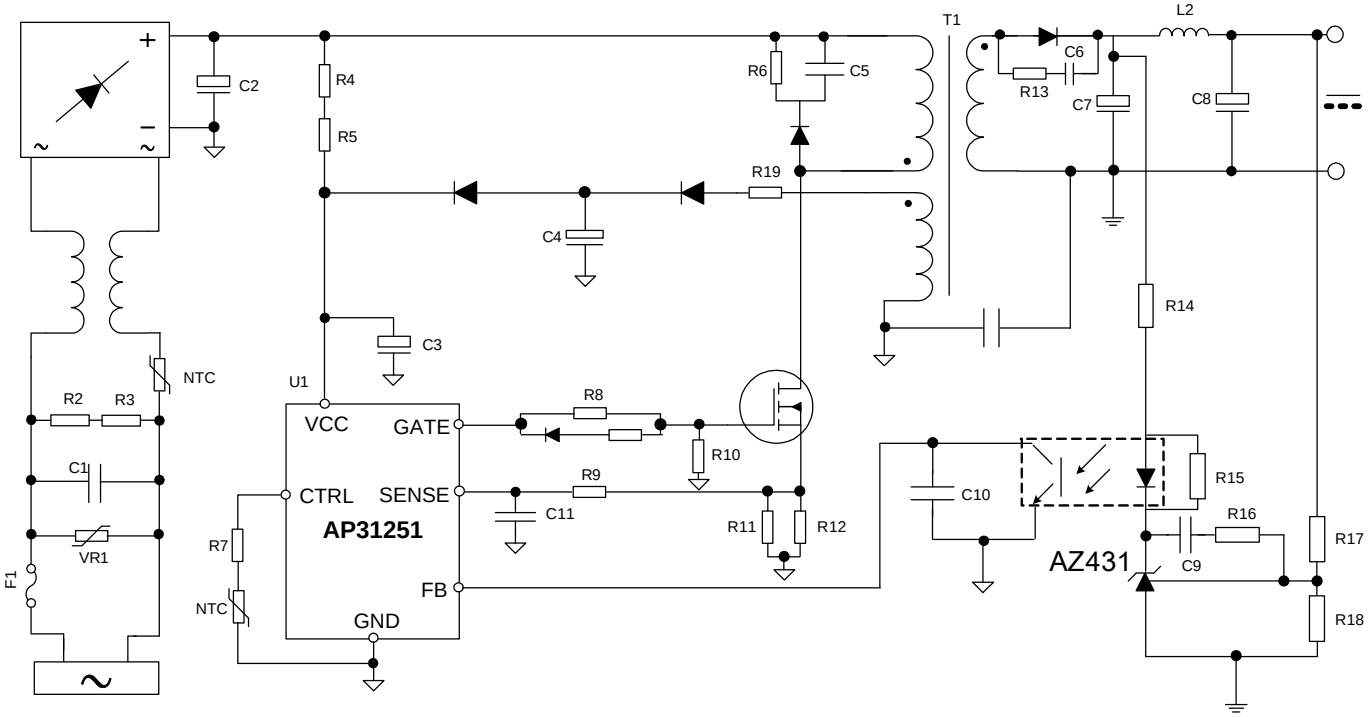

Pin Descriptions

Pin Number	Pin Name	Function
1	GND	Signal ground. Current return for driver and control circuits
2	FB	Feedback. Directly connected to the opto-coupler
3	CTRL	Latch trigger if this pin voltage drops below a threshold or over another threshold, leave CTRL pin open if this function is not needed. Connecting a NTC thermistor to GND can achieve OTP protection
4	SENSE	Current Sense
5	VCC	Supply voltage of driver and control circuits
6	GATE	Gate driver output

© Diodes Incorporated

NEW PRODUCT

Functional Block Diagram

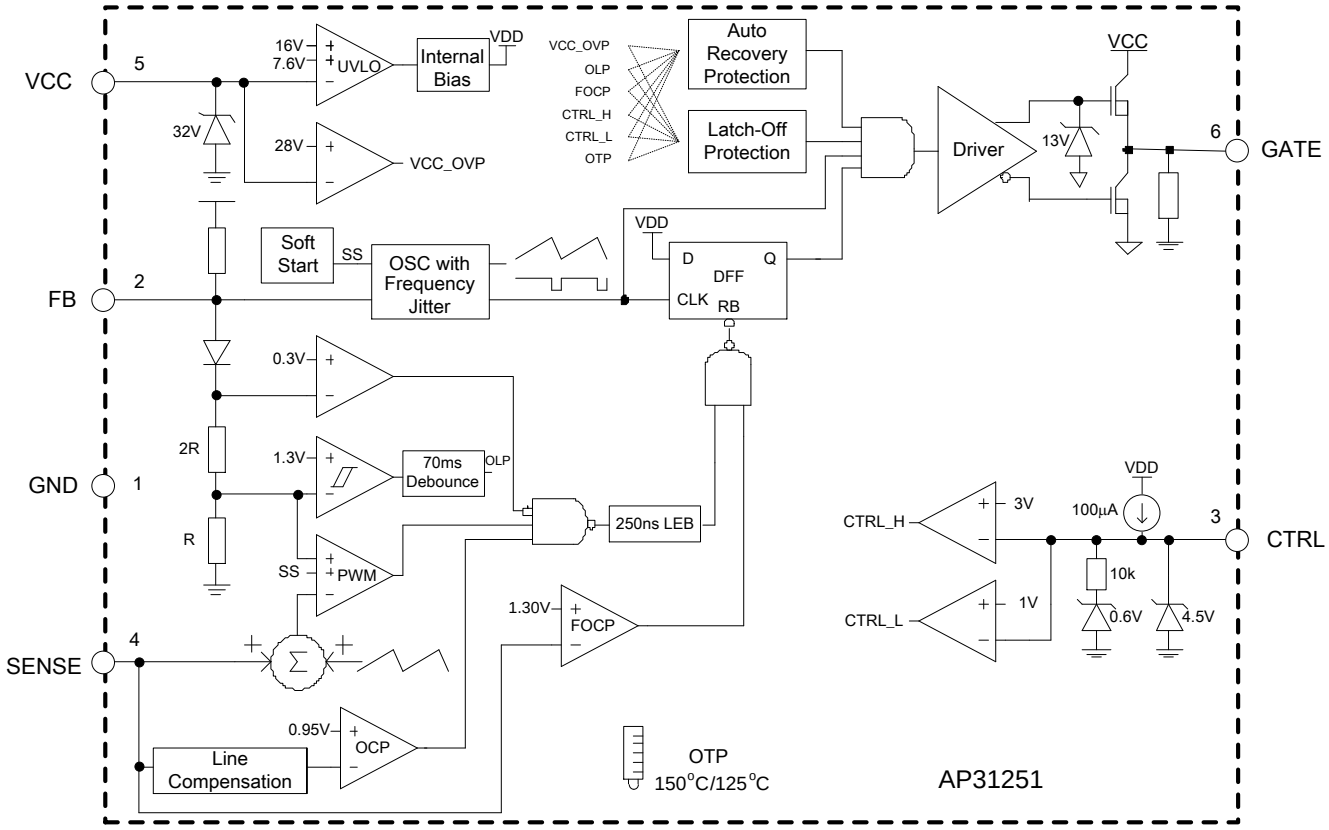

© Diodes Incorporated

NEW PRODUCT

Absolute Maximum Ratings (Notes 4 and 5)

Symbol	Parameter	Rating	Unit
V_{CC}	Power Supply Voltage	30	V
I_O	Gate Output Current	350	mA
V_{FB}, V_{SENSE}, V_{CTRL}	Input Voltage to FB, SENSE, CTRL Pins	-0.3 to 7	V
θ_{JA}	Thermal Resistance (Junction to Ambient)	250	°C/W
P_D	Power Dissipation at T_A < +25°C	500	mW
T_J	Operating Junction Temperature	-40 to +150	°C
T_{STG}	Storage Temperature Range	+150	°C
—	ESD (Human Body Model)	3000	V
—	ESD (Machine Model)	200	V

Notes: 4. Stresses greater than those listed under "*Absolute Maximum Ratings*" can cause permanent damage to the device. These are stress ratings only, and functional operation of the device at these or any other conditions beyond those indicated under "*Recommended Operating Conditions*" is not implied. Exposure to "*Absolute Maximum Ratings*" for extended periods can affect device reliability.

5. Rating values of FB/SENSE/CTRL/GATE pin refer to DC only. For small duty cycle pulse in less than 200ns in one period (typical 15.4μs), negative spike value is relaxed to -2V.

Recommended Operating Conditions

Symbol	Parameter	Min	Max	Unit
V_{CC}	Supply Voltage	10	25	V
T_A	Ambient Temperature	-40	+85	°C

© Diodes Incorporated

NEW PRODUCT

Electrical Characteristics (@T_A = +25°C, V_{CC} = 16V, unless otherwise specified.)

Symbol	Parameter	Condition	Min	Typ	Max	Unit
Supply Voltage (VCC Pin)						
$I_{STARTUP}$	Startup Current	—	—	1	10	μA
I_{CC}	Operating Supply Current	V_{FB} = 0V, C_L = 1nF	0.5	0.7	1	mA
		V_{FB} = 3V, C_L = 0nF	0.6	1.2	2.0	
$V_{UVLO(ON)}$	V_{CC} Under Voltage Lockout Enter	—	7.1	7.6	8.1	V
—	V_{CC} Maintain	—	8.6	9.1	9.6	V
$V_{UVLO(OFF)}$	V_{CC} Under Voltage Lockout Exit	—	14.5	15.8	16.5	V
—	V_{CC} OVP	—	27	28.5	30	V
—	V_{CC} Clamp	I_{CC} = 5mA	31	34	—	V
PWM Section/Oscillator Section						
—	Maximum Duty Cycle	—	70	75	80	%
—	Oscillation Frequency	—	60	65	70	kHz
—	Green Mode Frequency	—	20	—	30	kHz
—	Frequency Temperature Stability	-20°C to +125°C (Note 6)	—	—	5	%
—	Frequency Voltage Stability	V_{CC} = 12V to 25V	—	—	3	%
—	Frequency Dithering	—	±4	±6	±8	%
Current Sense Section (SENSE Pin)						
V_{CS}	Maximum SENSE Voltage	V_{FB} = 4.5V	0.9	0.95	1	V
—	FOCP Voltage	—	1.2	1.3	1.4	V
—	LEB Time of SENSE	V_{CC}=16V, V_{FB}=4V, V_{CS}=1.1V, C_L=1nF (Note 7)	150	250	350	ns
—	Delay to Output (Note 6)	—	—	100	—	ns
—	Soft-Start Time	—	3	5	8	ms
Feedback Input Section (FB Pin)						
—	Input Impedance	—	12	15	18	kΩ
—	Source Current	V_{FB} = 0V	-0.2	-0.27	-0.34	mA
—	Green Mode Threshold	—	—	2.1	—	V
—	Input Voltage for Zero Duty	—	1.3	1.55	1.8	V
Output Section (GATE Pin)						
—	Output Low Level	I_O = 20mA, V_{CC} = 12V	—	—	1	V
—	Output High Level	I_O = 20mA, V_{CC} = 12V	7.5	—	—	V
—	Output Clamping Voltage	—	10	12	14	V
—	Rising Time (Note 6)	C_L = 1nF, V_{CC} = 13V	—	200	300	ns
—	Falling Time (Note 6)	C_L = 1nF, V_{CC} = 13V	—	50	100	ns

Notes: 6. Guaranteed by design.
7. The Min. on time included LEB and delay to Output (100ns).

© Diodes Incorporated

NEW PRODUCT

Electrical Characteristics (continued) (@T_A = +25°C, V_{CC} = 16V, unless otherwise specified.)

Symbol	Parameter	Condition	Min	Typ	Max	Unit
Protection Section (CTRL Pin)						
—	Source Current	—	90	100	110	μA
—	Internal Reference Voltage	—	—	1.9	—	V
—	Low Threshold Trigger for Latch	—	0.94	1	1.06	V
—	High Threshold Trigger for Latch	—	2.85	3	3.15	V
—	Pull-Up Current	—	—	—	2	mA
Delay Time Section						
—	Delay of Short Circuit Protection	—	—	70	—	ms
—	Delay of Hiccup Protection	V_{CC} OVP	—	5	—	Cycles
Internal OTP Section						
—	OTP Enter	—	—	+150	—	°C
—	OTP Exit	—	—	+125	—	°C

© Diodes Incorporated

NEW PRODUCT

Performance Characteristics

Startup Voltage vs. Ambient Temperature

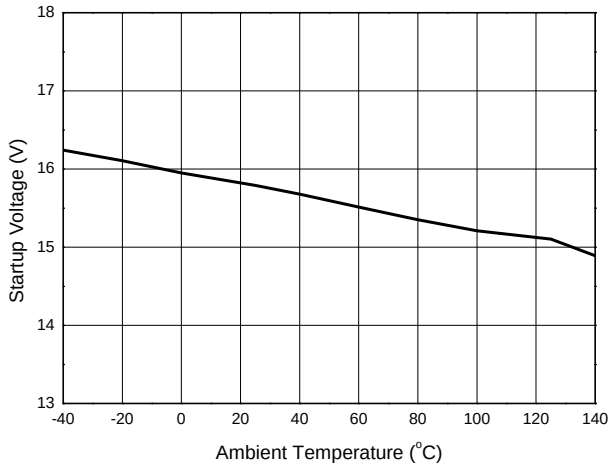

Shutdown Voltage vs. Ambient Temperature

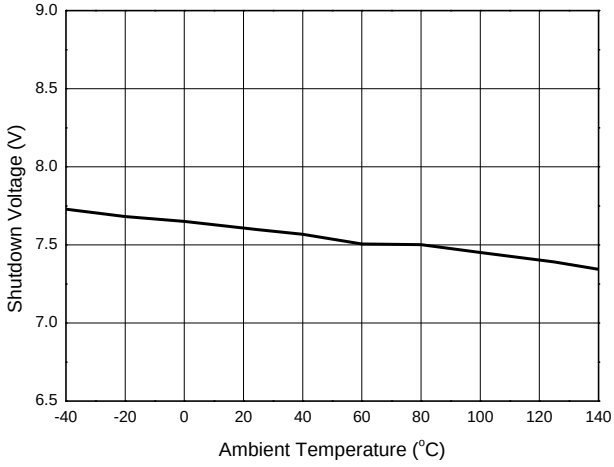

Startup Current vs. Ambient Temperature

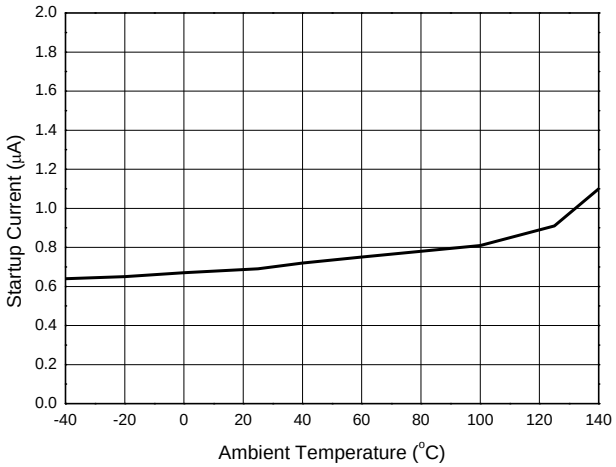

Operating Current vs. Ambient Temperature

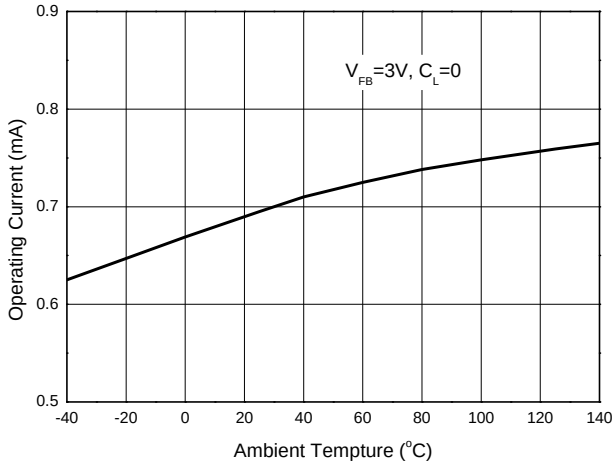

CTRL Utilization for Latch

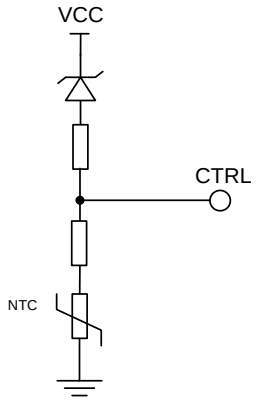

OVP and OTP

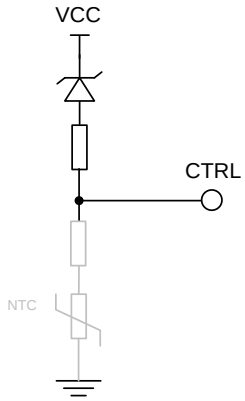

OVP

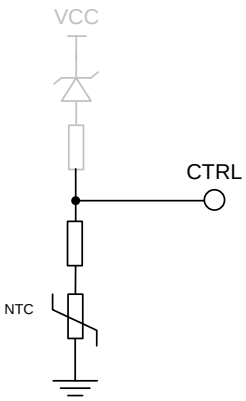

OTP

© Diodes Incorporated

NEW PRODUCT

Operation Description

The AP31251 is specifically designed for off-line AC-DC power supply used in LCD monitor, notebook adapter and battery charger applications. It offers a cost effective solution with a versatile protection function.

Start-up Current and UVLO

The start-up current of AP31251 is optimized to realize ultra low current (1μA typical) so that VCC capacitor can be charged more quickly. The direct benefit of low start-up current is the availability of using large start-up resistor, which minimizes the resistor power loss for high voltage AC input.

An UVLO comparator is included in AP31251 to detect the voltage on VCC pin. It ensures that AP31251 can draw adequate energy from hold-up capacitor during power-on. The turn-on threshold is 16V and the turn-off threshold is 7.6V.

Current Sense Comparator and PWM Latch

The AP31251 operates as a current mode controller, the output switch conduction is initiated by every oscillator cycle and is terminated when the peak inductor current reaches the threshold level established by the FB pin. The inductor current signal is converted to a voltage signal by inserting a reference sense resistor R_S. The inductor current under normal operating conditions is controlled by the voltage at FB pin. The relation between peak inductor current (I_{PK}) and V_{FB} is:

$$I_{PK} = (V_{FB} - 0.8) / 3R_S$$

Moreover, FOCP with 1.3V threshold is only about 100ns delay, which can avoid some catastrophic damages such as secondary rectifier short test. Few drive cycles can alleviate the destruction range and get better protection.

Leading-Edge Blanking

A narrow spike on the leading edge of the current waveform can usually be observed when the power MOSFET is turned on. A 250ns leading-edge blank is built-in to prevent the false-triggering caused by the turn-on spike. During this period, the current limit comparator is disabled and the gate driver cannot be switched off.

At the time of turning off the MOSFET, a negative undershoot (maybe larger than -0.3V) can occur on the SENSE pin. So it is strongly recommended to add a small RC filter or at least connect a resistor “R” on this pin to protect the IC (Shown as Figure 1).

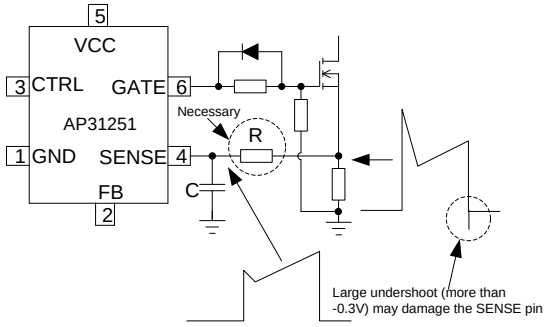

Figure 1

Built-In Slope Compensation

It is well known that a continuous current mode SMPS may become unstable when the duty cycle exceeds 50%. The built-in slope compensation can improve the stability, so there is no need for design engineer to spend much time on that.

FB Pin and Short Circuit Protection

This pin is normally connected to the opto-coupler and always paralleled with a capacitor for loop compensation. When the voltage at this pin is greater than 4.5V and lasts for about 70ms, the IC will enter the protection mode. For AP31251, the system will enter hiccup mode to wait the V_{CC} decreasing to low UVLO level, then the IC will try to restart until the failure removed. And when this voltage is less than 1.55V, the IC will stop the drive pulse immediately. Therefore, this feature can be used for short circuit protection, which makes the system immune from damage. Normally, output short makes the V_{FB} value to the maximum because the opto-coupler is cut off.

V_{CC} Maintain Mode

During light load or step load, V_{FB} will drop and be lower than 1.55V, thus the PWM drive signal will be stopped, and there is no more new energy transferred due to no switching. Therefore, the IC supply voltage may reduce to the shutdown threshold voltage and system may enter the unexpected restart mode. To avoid this, the AP31251 hold a so-called V_{CC} maintain mode which can supply energy to V_{CC}.

© Diodes Incorporated

NEW PRODUCT

Operation Description (Continued)

When V_{CC} decreases to a setting threshold, the V_{CC} maintain comparator will output some drive signal to make the system switch and provide a proper energy to VCC pin. The V_{CC} maintain function will cooperate with the PWM and burst mode loop which can make the output voltage variation be within the regulation. This mode is very useful for reducing startup resistor loss and achieving a better standby performance with a low value V_{CC} capacitor. The V_{CC} is not easy to touch the shutdown threshold during the startup process and step load. This will also simplify the system design. The minimum V_{CC} voltage is suggested to be designed a little higher than V_{CC} maintain threshold thus can achieve the best balance between the standby and step load performance.

System Protection and Pin Fault Protection

The AP31251 provides versatile system and pin fault protections. The OCP comparator realizes the cycle-by-cycle current limiting (OCP). In universal input line voltage, the IC realizes the constant over load protection (OLP). V_{CC} over voltage protection can be applied as the primary OVP or opto-coupler broken protection. The AP31251 also has pin fault connection protection including floating and short connection. The floating pin protection includes the SENSE, FB, etc. The short pin protection includes the CTRL pin short protection. When these pins are floated or CTRL pin is shorted to ground, PWM switching will be disabled, thus protecting the power system.

Latch Protection Function

For some applications, the system requires the latch protection function. The CTRL pin has two kinds of modes to trigger the latch protection: high level trigger and low level trigger. The low threshold is 1V and high threshold voltage is 3V. Some version will have only one mode. Once the latch protection is triggered, the IC will disable the output signal, and the bulk capacitor provides the energy to IC through the startup resistor to ensure the IC disable the output (latch mode). This mode will be not released until the AC input is shut off. So, the de-latch time is mainly depending on the HV startup bulk capacitor value. Therefore, if the system wants a short de-latch time, it is better for the startup resistor take power from the point before the rectifier bridge as illustrated in Figure 2.

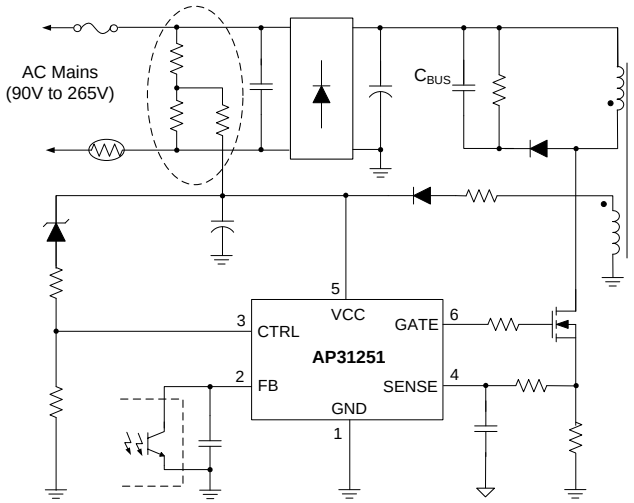

Figure 2

Internal OTP Protection Function

The AP31251 integrates an internal temperature sensor. It has a trigger window of +150°C enter and +125°C exit. The internal OTP protection mode is auto-recovery mode.

© Diodes Incorporated

NEW PRODUCT

Ordering Information

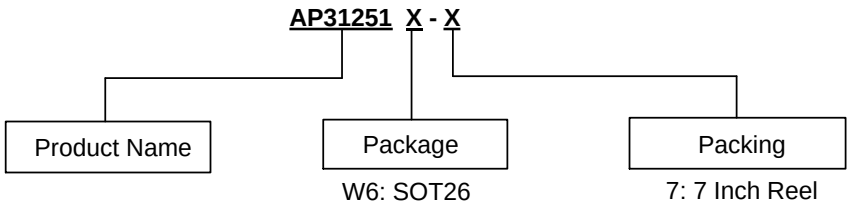

Package	Part Number	Marking ID	Packing
SOT26	AP31251W6-7	B2	3,000/7''Tape and Reel

Protection Functions

VOVP	OLP and SOCP	CTRL (Low)	CTRL (High)
Auto-Recoverable	Auto-Recoverable	Latch-Off	Auto-Recoverable

Marking Information

(Top View)

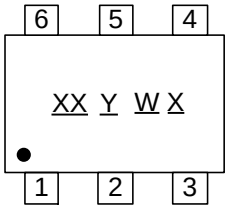

XX : Identification Code
Y : Year 0~9
W : Week : A~Z : 1~26 week;
a~z : 27~52 week; z represents
52 and 53 week
X : Internal Code

© Diodes Incorporated

NEW PRODUCT

Package Outline Dimensions (All dimensions in mm (inch).)

Please see http://www.diodes.com/package-outlines.html for the latest version.

(1) Package Type: SOT26

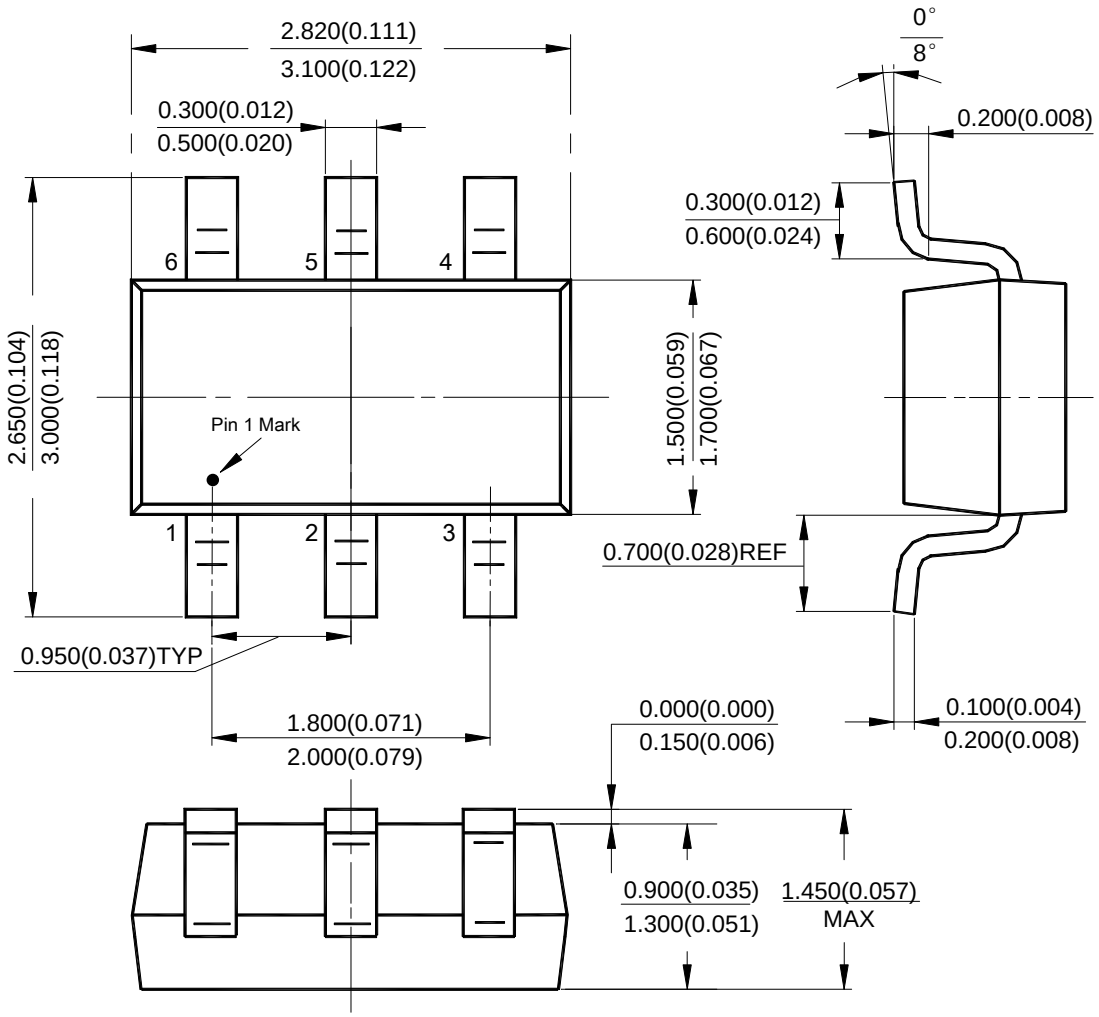

© Diodes Incorporated

NEW PRODUCT

Suggested Pad Layout

Please see http://www.diodes.com/package-outlines.html for the latest version.

(1) Package Type: SOT26

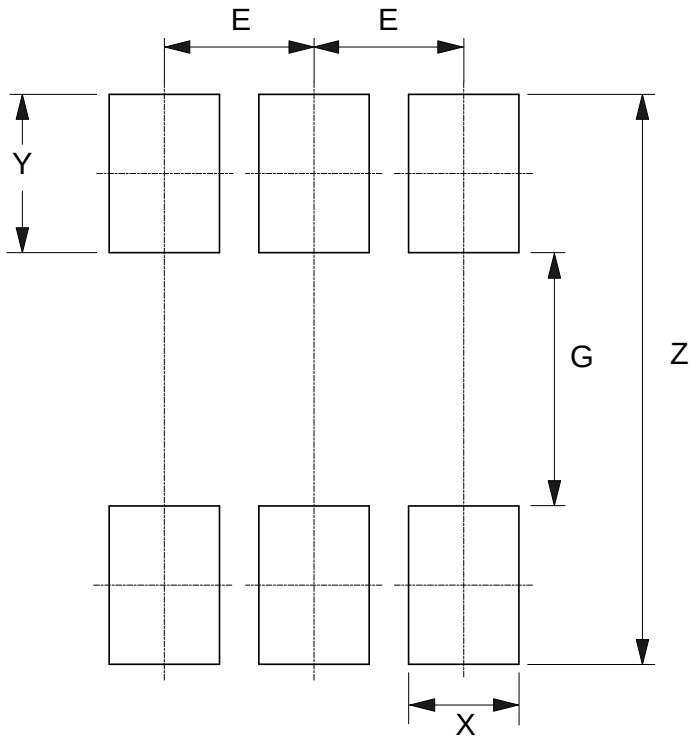

Dimensions	Z (mm)/(inch)	G (mm)/(inch)	X (mm)/(inch)	Y (mm)/(inch)	E (mm)/(inch)
Value	3.600/0.142	1.600/0.063	0.700/0.028	1.000/0.039	0.950/0.037

© Diodes Incorporated

NEW PRODUCT

IMPORTANT NOTICE

DIODES INCORPORATED MAKES NO WARRANTY OF ANY KIND, EXPRESS OR IMPLIED, WITH REGARDS TO THIS DOCUMENT, INCLUDING, BUT NOT LIMITED TO, THE IMPLIED WARRANTIES OF MERCHANTABILITY AND FITNESS FOR A PARTICULAR PURPOSE (AND THEIR EQUIVALENTS UNDER THE LAWS OF ANY JURISDICTION).

Diodes Incorporated and its subsidiaries reserve the right to make modifications, enhancements, improvements, corrections or other changes without further notice to this document and any product described herein. Diodes Incorporated does not assume any liability arising out of the application or use of this document or any product described herein; neither does Diodes Incorporated convey any license under its patent or trademark rights, nor the rights of others. Any Customer or user of this document or products described herein in such applications shall assume all risks of such use and will agree to hold Diodes Incorporated and all the companies whose products are represented on Diodes Incorporated website, harmless against all damages.

Diodes Incorporated does not warrant or accept any liability whatsoever in respect of any products purchased through unauthorized sales channel. Should Customers purchase or use Diodes Incorporated products for any unintended or unauthorized application, Customers shall indemnify and hold Diodes Incorporated and its representatives harmless against all claims, damages, expenses, and attorney fees arising out of, directly or indirectly, any claim of personal injury or death associated with such unintended or unauthorized application.

Products described herein may be covered by one or more United States, international or foreign patents pending. Product names and markings noted herein may also be covered by one or more United States, international or foreign trademarks.

This document is written in English but may be translated into multiple languages for reference. Only the English version of this document is the final and determinative format released by Diodes Incorporated.

LIFE SUPPORT

Diodes Incorporated products are specifically not authorized for use as critical components in life support devices or systems without the express written approval of the Chief Executive Officer of Diodes Incorporated. As used herein:

A. Life support devices or systems are devices or systems which:

1. are intended to implant into the body, or
2. support or sustain life and whose failure to perform when properly used in accordance with instructions for use provided in the labeling can be reasonably expected to result in significant injury to the user.

B. A critical component is any component in a life support device or system whose failure to perform can be reasonably expected to cause the failure of the life support device or to affect its safety or effectiveness.

Customers represent that they have all necessary expertise in the safety and regulatory ramifications of their life support devices or systems, and acknowledge and agree that they are solely responsible for all legal, regulatory and safety-related requirements concerning their products and any use of Diodes Incorporated products in such safety-critical, life support devices or systems, notwithstanding any devices- or systems-related information or support that may be provided by Diodes Incorporated. Further, Customers must fully indemnify Diodes Incorporated and its representatives against any damages arising out of the use of Diodes Incorporated products in such safety-critical, life support devices or systems.

Copyright © 2019, Diodes Incorporated

www.diodes.com

ENTEGRECİ

Bu belge www.entegreci.com üzerinden sunulmaktadır.

Elektronik komponent tedarikinde Entegreci

Entegreci, Eskişehir merkezli, Türkiye geneline satış yapan bir elektronik komponent mağazasıdır. Entegreler (IC), mikrodenetleyiciler, transistörler, diyotlar, pasif elemanlar, konnektörler, modüller ve geliştirme kartları tek adetten seri üretim adetlerine kadar satılır. Ürün sayfalarında güncel stok durumunu, fiyatı ve datasheet bağlantısını bulabilirsiniz.

Parça koduyla arama

Üretici parça numarasını yazın; stok ve fiyatı hemen görün.

www.entegreci.com

Ürün kategorileri

Entegreden kapasitöre tüm elektronik komponent kategorileri.

Kategorilere göz atın

Üreticiler

Aradığınız üreticinin ürünlerini tek sayfada inceleyin.

Üreticileri görün

Toplu alım ve teklif

Listede olmayan ya da yüksek adetli parçalar için teklif isteyin.

Teklif isteyin

www.entegreci.com | **destek@entegreci.com** | **0850 305 90 34**

Entegreci is an online electronic components store based in Türkiye. Search by manufacturer part number to see stock, prices and datasheets for integrated circuits, microcontrollers, transistors, passive components and connectors, or request a quote for parts that are not listed.

Bu sayfa Entegreci tarafından eklenmiştir. Belgenin önceki sayfaları asıl yayıncısına aittir ve içeriği değiştirilmemiştir; en güncel sürüm için belgenin yayıncısına başvurun.