Description

The AP2331 is a single channel current-limited integrated high-side power switcher optimized for hot-swap applications. The devices have fast short-circuit response time for improved overall system robustness and provide a complete protection solution for application subject to heavy capacitive loads and the prospect of short circuit. It offers reverse-current blocking, over-current, over-temperature and short-circuit protection, as well as controlled rise time and under-voltage lockout functionality.

The device is available in SOT23, SC59 and U-DFN2020-3 packages.

Features

- Input Voltage Range: 2.7V - 5.2V
- Fast Short-Circuit Response Time
- 0.4A Accurate Current Limiting
- 250mΩ On-Resistance
- Reverse-Current Blocking
- Built-In Soft-Start with 0.7ms Typical Turn-On Time
- Over-Current Protection
- Over-Voltage Protection
- Short-Circuit and Thermal Protection
- ESD Protection: 3KV HBM, 300V MM
- Ambient Temperature Range: -40°C to +85°C
- Available in “Green” Molding Compound (No Br, Sb)
- **Totally Lead-Free & Fully RoHS Compliant (Notes 1 & 2)**
- **Halogen and Antimony Free. “Green” Device (Note 3)**
- UL Recognized, File Number E322375
- IEC60950-1 CB Scheme Certified

Applications

- LCD TVs & Monitors
- Set-Top Boxes, Residential Gateways
- Laptops, Desktops, Servers
- Printers, Docking Stations, HUBs
- Smart Phones, e-Readers

Pin Assignments

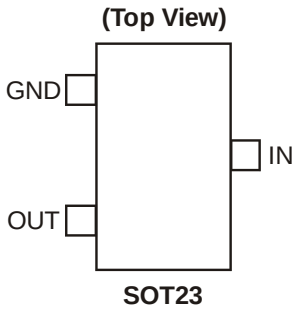

SOT23

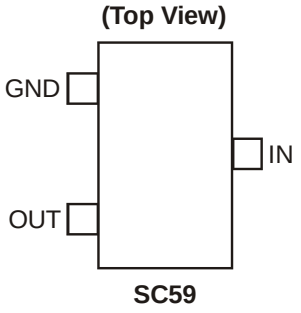

SC59

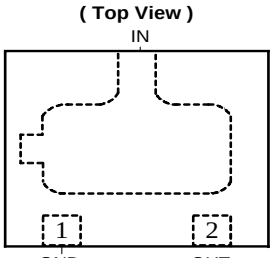

DFN2020-3

Notes:
1. No purposely added lead. Fully EU Directive 2002/95/EC (RoHS) & 2011/65/EU (RoHS 2) compliant.
2. See http://www.diodes.com/quality/lead_free.html for more information about Diodes Incorporated’s definitions of Halogen- and Antimony-free, "Green" and Lead-free.
3. Halogen- and Antimony-free "Green” products are defined as those which contain <900ppm bromine, <900ppm chlorine (<1500ppm total Br + Cl) and <1000ppm antimony compounds.

© Diodes Incorporated

Typical Application Circuit

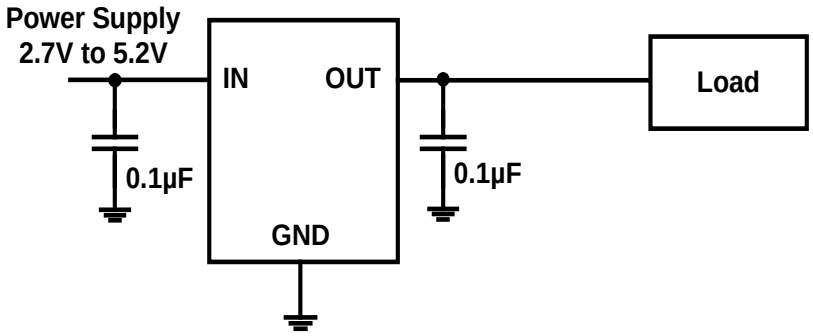

Pin Descriptions

Pin Name	Pin Number	Functionss
GND	1	GND
OUT	2	Switch Output Pin
IN	3	Voltage Input Pin

Absolute Maximum Ratings (@T_A = +25°C, unless otherwise specified.)

Symbol	Parameter	Ratings	Units
ESD HBM	Human Body Model ESD Protection	3	KV
ESD MM	Machine Model ESD Protection	300	V
V_{IN}	Input Voltage Relative to GND	6.5	V
V_{OUT}	Output Voltage Relative to GND	V_{IN} +0.3	V
I_{LOAD}	Maximum Continuous Load Current	Internal Limited	A
T_{JMAX}	Maximum Junction Temperature	150	°C
T_{ST}	Storage Temperature Range (Note 4)	-65 to +150	°C

Note: 4. UL Recognized Rating from -30°C to +70°C (Diodes qualified T_{ST} from -65°C to +150°C)

Recommended Operating Conditions (@T_A = +25°C, unless otherwise specified.)

Symbol	Parameter	Min	Max	Units
V_{IN}	Input Voltage Relative to GND	2.7	5.2	V
I_{OUT}	Output Current	0	0.2	A
T_A	Operating Ambient Temperature	-40	+85	°C

© Diodes Incorporated

Electrical Characteristics (@T_A = +25°C, VIN = +5V, unless otherwise specified.)

Symbol	Parameter	Test Conditions (Note 5)	Min	Typ	Max	Unit
V_{UVLO}	Input UVLO	V_{IN} rising	2.35		2.65	V
I_Q	Input quiescent current	Above UVLO, I_{OUT} = 0		85	125	µA
I_{REV}	Reverse leakage current	V_{IN} = 0V, V_{OUT} = 5V, I_{REV} at V_{IN}		0.01	0.10	µA
$R_{DS(ON)}$	Switch on-resistance	V_{IN} = 5V, I_{OUT} = 0.2A	100	250	350	mΩ
I_{LIMIT}	Over-load current limit	V_{IN} = 5V, V_{OUT} = 4V	0.3	0.4	0.5	A
I_{OS}	Short-circuit current	OUT shorted to ground	0.3	0.4	0.5	A
I_{ROCP}	Reverse-current trigger point	V_{IN} = 5.0V, V_{OUT} = 5.2V		0.20	0.25	A
T_{TRIG}	Deglitch time from reverse current trigger to MOSFET turn off	(Note 6)	0.5	0.7	1.0	ms
V_{OVP}	Output over-voltage trip point	(Note 7)	5.3		5.6	V
T_{OVP}	Debounce time from output over-voltage to MOSFET turn off			15		µs
V_{REC}	Recovery after turn-off from ROCP and OVP			101%		V_{IN}
T_{ON}	Output turn-on time (Note 8)	C_L = 0.1µF, R_{LOAD} = 20Ω (UVLO to 90% $V_{OUT-NOM}$)		0.7		ms
T_{SHDN}	Thermal shutdown threshold	V_{IN} = 2.7V to 5.2V		150		°C
T_{HYS}	Thermal shutdown hysteresis			20		°C
θ_{JA}	Thermal Resistance Junction-to-Ambient (Note 9)	SOT23		215		°C/W
		SC59		255		°C/W
		U-DFN2020-3		180		°C/W

Notes:
5. Pulse-testing techniques maintain junction temperature close to ambient temperature; thermal effects must be taken into account separately.
6. When reverse current triggers at I_{ROCP} = 0.20A, the reverse current is continuously clamped at I_{ROCP} for 0.7ms deglitch time until MOSFET is turned off.
7. During output over-voltage protection, the output draws approximately 60µA current.
8. Since the output turn-on slew rate is dependent on input supply slew rate, this limit is only applicable for input supply slew rate between V_{IN}/0.2ms to V_{IN}/1ms.
9. Device mounted on FR-4 substrate PCB, 2oz copper, with minimum recommended pad layout.

© Diodes Incorporated

Typical Performance Characteristics

UVLO Increasing



1ms/div

UVLO Decreasing



5ms/div

Over-Load Current Limit

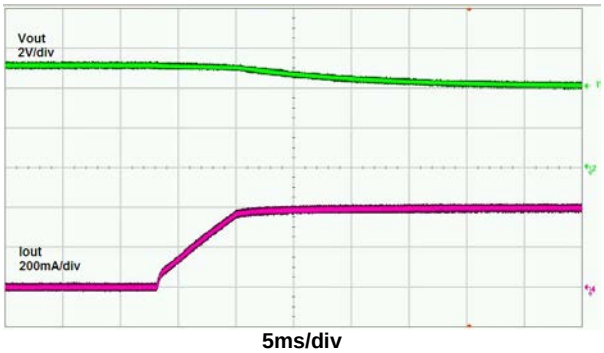

5ms/div

Short-Circuit Current Limit

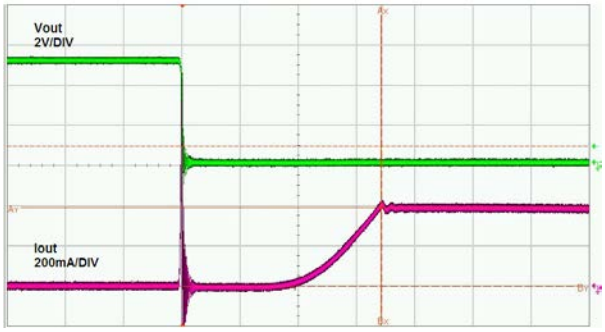

100µs/div

Deglitch Time from Reverse-Current Trigger to MOSFET Turn-Off

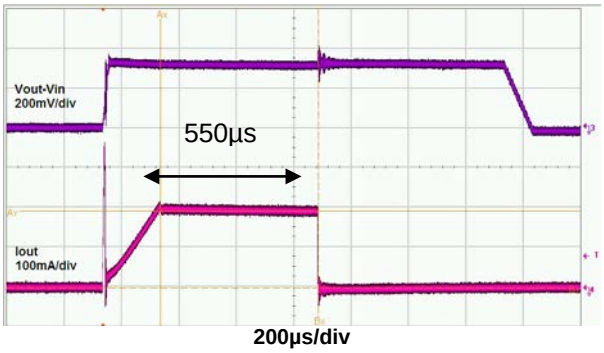

200µs/div

Reverse-Current Limit

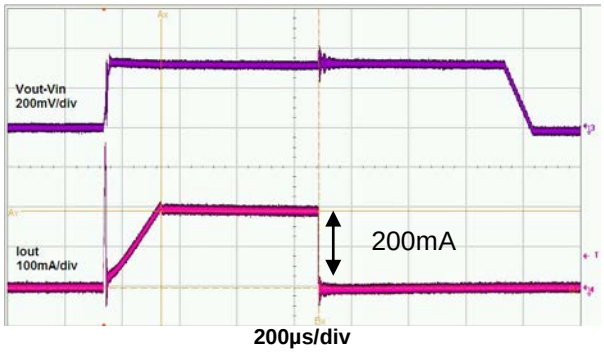

200µs/div

© Diodes Incorporated

Typical Performance Characteristics (cont.)

Output Over-Voltage Trip Point

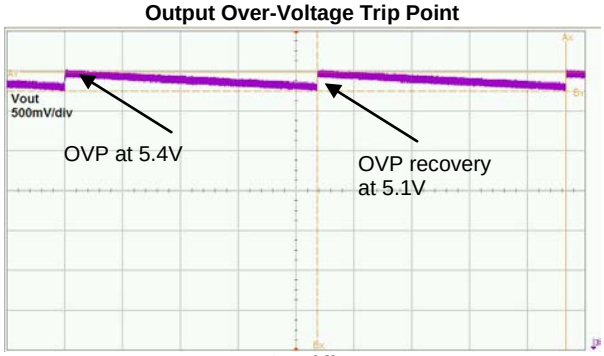

10ms/div

Output Turn-On Time

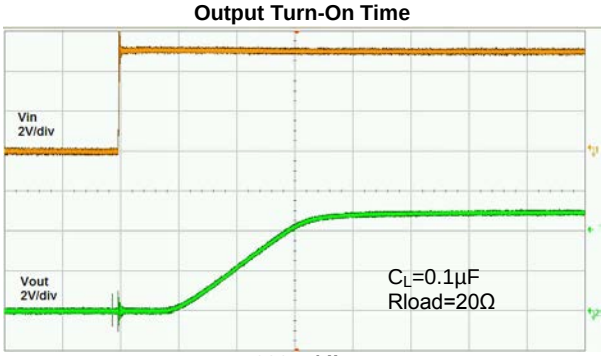

200µs/div

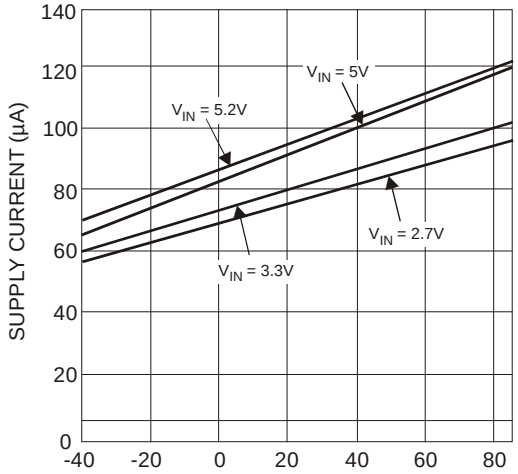

Fig. 1 Quiescent Supply Current vs. Ambient Temperature

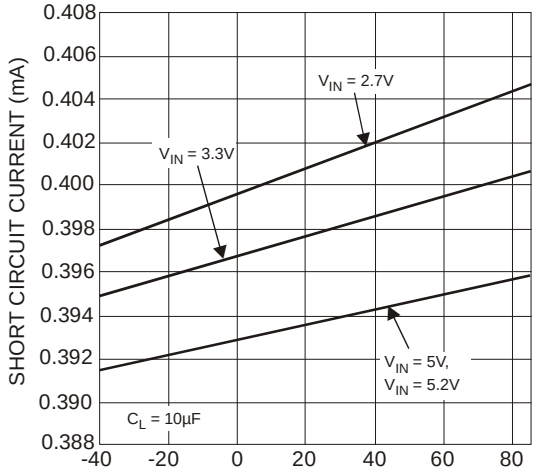

Fig. 2 Short Circuit Current Limit vs. Ambient Temperature

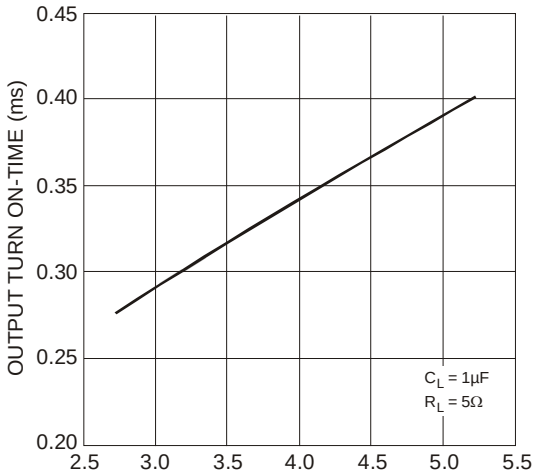

Fig. 3 Output Turn On-Time vs. Input Voltage

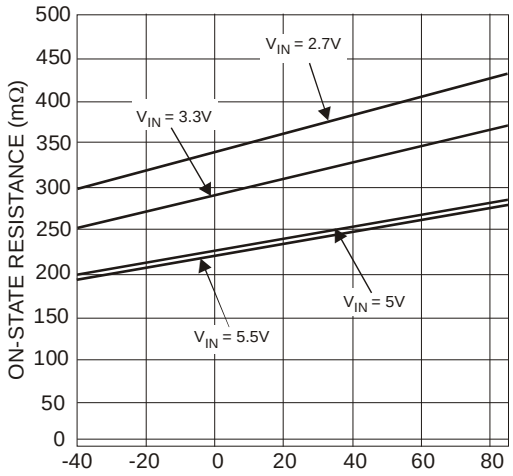

Fig. 4 Switch On-Resistance vs. Ambient Temperature

© Diodes Incorporated

Typical Performance Characteristics (cont.)

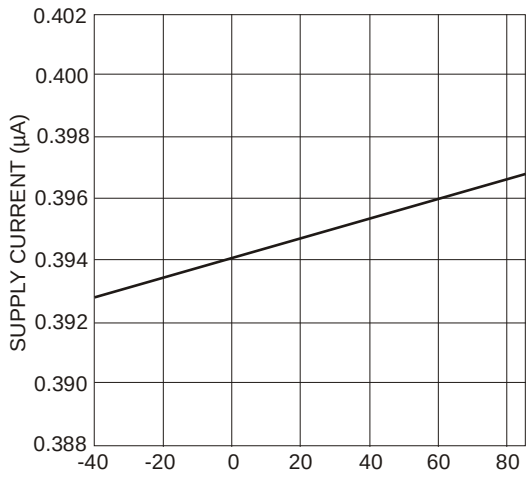

Fig. 5 Current Limit Trip Threshold vs. Ambient Temperature

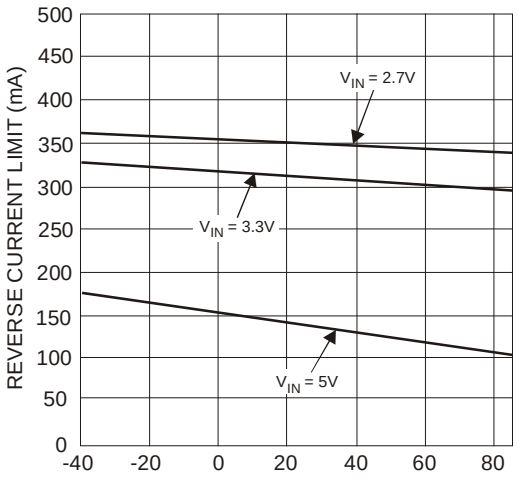

Fig. 6 Reverse Current Limit vs. Ambient Temperature

© Diodes Incorporated

Application information

Under-Voltage Lockout (UVLO)

Under-voltage lockout function (UVLO) guarantees that the internal power switch is initially off during start-up. The UVLO functions only when the power supply has reached at least 2.5V (TYP). Whenever the input voltage falls below approximately 2.5V, the power switch is turned off. This facilitates the design of hot-insertion systems where it is not possible to turn off the power switch before input power is removed.

Over-Current and Short-Circuit Protection

An internal sensing FET is employed to check for over current conditions. Unlike current-sense resistors, sense FETs do not increase the series resistance of the current path. When an over current condition is detected, the device maintains a constant output current and reduces the output voltage accordingly. Complete shutdown occurs only if the fault stays long enough to activate thermal limiting.

The different overload conditions and the corresponding response of the AP2331 are outlined below:

S.NO	Conditions	Explanation	Behavior of the AP2331
1	Short-circuit condition at start-up	Output is shorted before input voltage is applied or before the part is powered up.	The IC senses the short circuit and immediately clamps output current to a certain safe level namely I_{LIMIT}
2	Short-circuit or Over current condition	Short-Circuit or Overload condition that occurs when the part is powered up and above UVLO.	At the instance the overload occurs, higher current may flow for a very short period of time before the current limit function can react. After the current limit function has tripped (reached the over-current trip threshold), the device switches into current limiting mode and the current is clamped at I_{LIMIT}.
3	Gradual increase from nominal operating current to I_{LIMIT}	Load increases gradually until the current-limit threshold.	The current rises until I_{LIMIT}. Once the threshold has been reached, the device switches into its current limiting mode and is clamped at I_{LIMIT}.

Reverse-Current Protection

The USB specification does not allow an output device to source current back into the USB port. In a normal MOSFET switch, current will flow in reverse direction (from the output side to the input side) when the output side voltage is higher than the input side. A reverse current limit feature is implemented in the AP2331 to limit such back currents. Reverse current limit is always active in AP2331. Reverse current is limited at IROCP level and when the fault exists for more than 700µs, output device is disabled and shut down. This is called the *"Deglitch time from reverse current trigger to MOSFET turn off."* Recovery from IROCP occurs when the output voltage falls to 101% of input voltage.

Over-Voltage Protection

The device has an ***output over-voltage*** protection that triggers when the output voltage reaches 5.3V (MIN). When this fault condition stays on for longer than 15µs, (This is called the "Debounce time from output over voltage to MOSFET turn off") output device is disabled and shut down. Recovery from ROVP occurs when the output voltage falls to 101% of input voltage.

Thermal Protection

Thermal protection prevents the IC from damage when the die temperature exceeds safe margins. This mainly occurs when heavy-overload or short-circuit faults are present for extended periods of time. The AP2331 implements a thermal sensing to monitor the operating junction temperature of the power distribution switch. Once the die temperature rises to approximately +150°C, the Thermal protection feature gets activated as follows: The internal thermal sense circuitry turns the power switch off thus preventing the power switch from damage. Hysteresis in the thermal sense circuit allows the device to cool down to approximately +20°C before the output is turned back on. This built-in thermal hysteresis feature is an excellent feature, as it avoids undesirable oscillations of the thermal protection circuit. The switch continues to cycle in this manner until the load fault is removed, resulting in a pulsed output.

Discharge Function

When input voltage falls below UVLO, the discharge function is active. The output capacitor is discharged through an internal NMOS that has a discharge resistance of 800Ω. Hence, the output voltage drops down to zero. The time taken for discharge is dependent on the RC time constant of the resistance and the output capacitor. Discharge time is calculated when UVLO falling threshold is reached to output voltage reaching 300mV.

© Diodes Incorporated

NEW PRODUCT

Application information (cont.)

Power Dissipation and Junction Temperature

The low on-resistance of the internal MOSFET allows the small surface-mount packages to pass large current. Using the maximum operating ambient temperature (T_A) and $R_{DS(ON)}$, the power dissipation can be calculated by:

$$P_D = R_{DS(ON)} \times I^2$$

Finally, calculate the junction temperature:

$$T_J = P_D \times R_{\theta JA} + T_A$$

Where:

T_A= Ambient Temperature °C

$R_{\theta JA}$ = Thermal Resistance

P_D = Total Power Dissipation

Ordering Information

AP 2331 X - 7

Package	Packing
SA : SOT23 **W : SC59** **FJ : DFN2020**	7 : Tape & Reel

Part Number	Package Code	Packaging (Note 10)	7" Tape and Reel	
			Quantity	Part Number Suffix
AP2331SA-7	SA	SOT23	3000/Tape & Reel	-7
AP2331W-7	W	SC59	3000/Tape & Reel	-7
AP2331FJ-7	FJ	U-DFN2020-3	3000/Tape & Reel	-7

Note: 10. Pad layout as shown on Diodes Inc. suggested pad layout document AP02001, which can be found on our website at http://www.diodes.com/datasheets/ap02001.pdf.

Marking Information

(1) SOT23

(Top View)

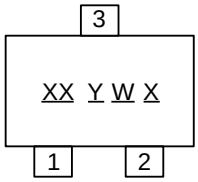

XX : Identification code
Y : Year 0~9
W : Week : A~Z : 1~26 week; a~z : 27~52 week; z represents 52 and 53 week
X : A~Z : Internal code

Device	Package	Identification Code
AP2331SA-7	SOT23	KJ

(2) SC59

(Top View)

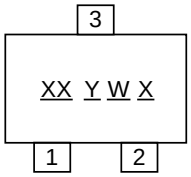

XX : Identification code
Y : Year 0~9
W : Week : A~Z : 1~26 week; a~z : 27~52 week; z represents 52 and 53 week
X : A~Z : Internal code

Device	Package	Identification Code
AP2331W-7	SC59	KN

© Diodes Incorporated

NEW PRODUCT

Marking Information

(3) U-DFN2020-3

(Top View)

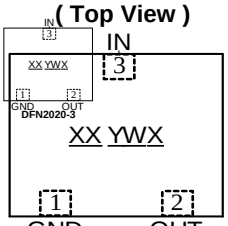

XX : Identification code
Y : Year 0~9
W : Week : A~Z : 1~26 week;
a~z : 27~52 week; z represents
52 and 53 week
X : A~Z : Internal code

DFN2020-3

Device	Package	Identification Code
AP2331FJ-7	U-DFN2020-3	FJ

Package Information

Please see AP02002 at http://www.diodes.com/datasheets/ap02002.pdf for the latest version.

(1) SOT23

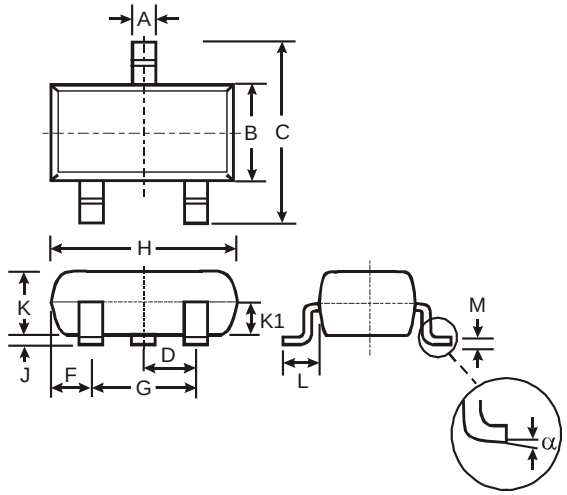

SOT23			
Dim	**Min**	**Max**	**Typ**
A	0.37	0.51	0.40
B	1.20	1.40	1.30
C	2.30	2.50	2.40
D	0.89	1.03	0.915
F	0.45	0.60	0.535
G	1.78	2.05	1.83
H	2.80	3.00	2.90
J	0.013	0.10	0.05
K	0.903	1.10	1.00
K1	-	-	0.400
L	0.45	0.61	0.55
M	0.085	0.18	0.11
α	0°	8°	-
All Dimensions in mm			

(2) SC59

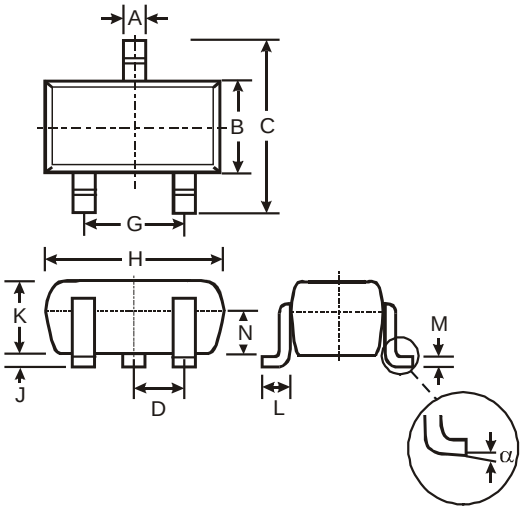

SC59			
Dim	**Min**	**Max**	**Typ**
A	0.35	0.50	0.38
B	1.50	1.70	1.60
C	2.70	3.00	2.80
D	-	-	0.95
G	-	-	1.90
H	2.90	3.10	3.00
J	0.013	0.10	0.05
K	1.00	1.30	1.10
L	0.35	0.55	0.40
M	0.10	0.20	0.15
N	0.70	0.80	0.75
α	0°	8°	-
All Dimensions in mm			

© Diodes Incorporated

NEW PRODUCT

Package Information (cont.)

Please see AP02002 at http://www.diodes.com/datasheets/ap02002.pdf for the latest version.

(3) U-DFN2020-3

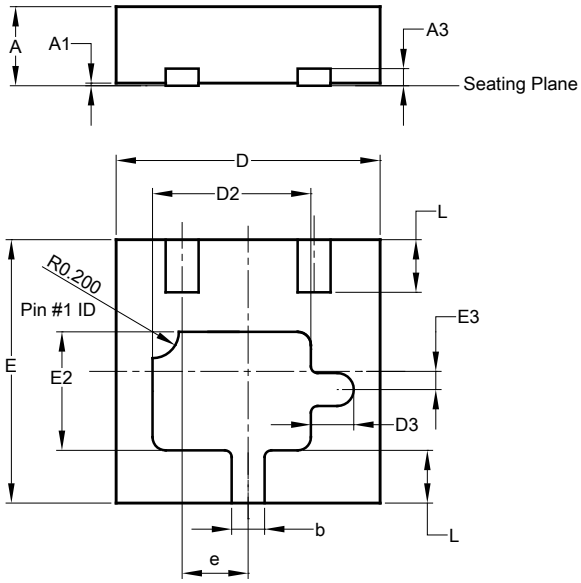

U-DFN2020-3			
Dim	**Min**	**Max**	**Typ**
A	0.57	0.63	0.60
A1	0	0.05	0.02
A3	-	-	0.152
b	0.20	0.30	0.25
D	1.950	2.075	2.00
D2	1.10	1.30	1.20
D3	0.325 REF		
e	-	-	0.50
E	1.950	2.075	2.00
E2	0.80	1.00	0.90
E3	0.138 REF		
L	0.35	0.45	0.40
All Dimensions in mm			

Suggested Pad Layout

Please see AP02002 at http://www.diodes.com/datasheets/ap02002.pdf for the latest version.

(1) SOT23

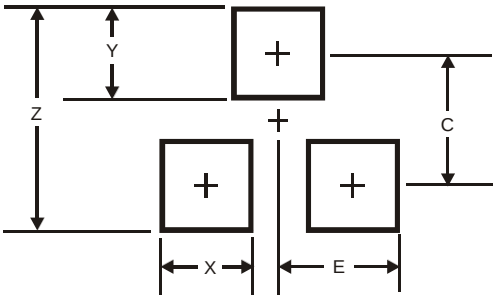

Dimensions	Value (in mm)
Z	3.4
X	0.8
Y	1.0
C	2.4
E	1.35

(2) SC59

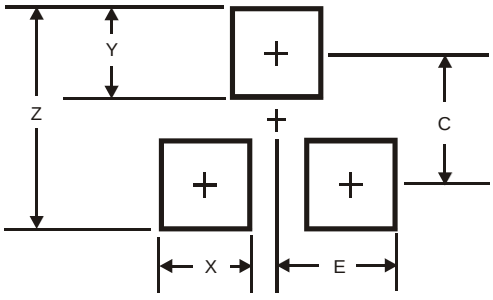

Dimensions	Value (in mm)
Z	**3.4**
X	**0.8**
Y	**1**
C	**2.4**
E	**1.35**

© Diodes Incorporated

NEW PRODUCT

Suggested Pad Layout (cont.)

Please see AP02002 at http://www.diodes.com/datasheets/ap02002.pdf for the latest version.

(3) U-DFN2020-3

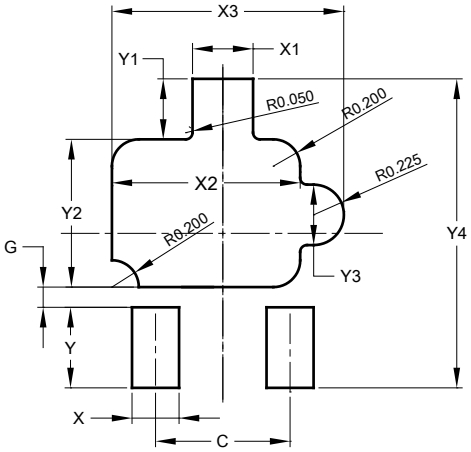

Dimensions	Value (in mm)
C	1.000
G	0.150
X	0.350
X1	0.450
X2	1.400
X3	1.724
Y	0.600
Y1	0.450
Y2	1.100
Y3	0.450
Y4	2.300

© Diodes Incorporated

NEW PRODUCT

IMPORTANT NOTICE

DIODES INCORPORATED MAKES NO WARRANTY OF ANY KIND, EXPRESS OR IMPLIED, WITH REGARDS TO THIS DOCUMENT, INCLUDING, BUT NOT LIMITED TO, THE IMPLIED WARRANTIES OF MERCHANTABILITY AND FITNESS FOR A PARTICULAR PURPOSE (AND THEIR EQUIVALENTS UNDER THE LAWS OF ANY JURISDICTION).

Diodes Incorporated and its subsidiaries reserve the right to make modifications, enhancements, improvements, corrections or other changes without further notice to this document and any product described herein. Diodes Incorporated does not assume any liability arising out of the application or use of this document or any product described herein; neither does Diodes Incorporated convey any license under its patent or trademark rights, nor the rights of others. Any Customer or user of this document or products described herein in such applications shall assume all risks of such use and will agree to hold Diodes Incorporated and all the companies whose products are represented on Diodes Incorporated website, harmless against all damages.

Diodes Incorporated does not warrant or accept any liability whatsoever in respect of any products purchased through unauthorized sales channel. Should Customers purchase or use Diodes Incorporated products for any unintended or unauthorized application, Customers shall indemnify and hold Diodes Incorporated and its representatives harmless against all claims, damages, expenses, and attorney fees arising out of, directly or indirectly, any claim of personal injury or death associated with such unintended or unauthorized application.

Products described herein may be covered by one or more United States, international or foreign patents pending. Product names and markings noted herein may also be covered by one or more United States, international or foreign trademarks.

This document is written in English but may be translated into multiple languages for reference. Only the English version of this document is the final and determinative format released by Diodes Incorporated.

LIFE SUPPORT

Diodes Incorporated products are specifically not authorized for use as critical components in life support devices or systems without the express written approval of the Chief Executive Officer of Diodes Incorporated. As used herein:

A. Life support devices or systems are devices or systems which:

1. are intended to implant into the body, or
2. support or sustain life and whose failure to perform when properly used in accordance with instructions for use provided in the labeling can be reasonably expected to result in significant injury to the user.

B. A critical component is any component in a life support device or system whose failure to perform can be reasonably expected to cause the failure of the life support device or to affect its safety or effectiveness.

Customers represent that they have all necessary expertise in the safety and regulatory ramifications of their life support devices or systems, and acknowledge and agree that they are solely responsible for all legal, regulatory and safety-related requirements concerning their products and any use of Diodes Incorporated products in such safety-critical, life support devices or systems, notwithstanding any devices- or systems-related information or support that may be provided by Diodes Incorporated. Further, Customers must fully indemnify Diodes Incorporated and its representatives against any damages arising out of the use of Diodes Incorporated products in such safety-critical, life support devices or systems.

Copyright © 2014, Diodes Incorporated

www.diodes.com

ENTEGRECİ

Bu belge www.entegreci.com üzerinden sunulmaktadır.

Elektronik komponent tedarikinde Entegreci

Entegreci, Eskişehir merkezli, Türkiye geneline satış yapan bir elektronik komponent mağazasıdır. Entegreler (IC), mikrodenetleyiciler, transistörler, diyotlar, pasif elemanlar, konnektörler, modüller ve geliştirme kartları tek adetten seri üretim adetlerine kadar satılır. Ürün sayfalarında güncel stok durumunu, fiyatı ve datasheet bağlantısını bulabilirsiniz.

Parça koduyla arama

Üretici parça numarasını yazın; stok ve fiyatı hemen görün.

www.entegreci.com

Ürün kategorileri

Entegreden kapasitöre tüm elektronik komponent kategorileri.

Kategorilere göz atın

Üreticiler

Aradığınız üreticinin ürünlerini tek sayfada inceleyin.

Üreticileri görün

Toplu alım ve teklif

Listede olmayan ya da yüksek adetli parçalar için teklif isteyin.

Teklif isteyin

www.entegreci.com | **destek@entegreci.com** | **0850 305 90 34**

Entegreci is an online electronic components store based in Türkiye. Search by manufacturer part number to see stock, prices and datasheets for integrated circuits, microcontrollers, transistors, passive components and connectors, or request a quote for parts that are not listed.

Bu sayfa Entegreci tarafından eklenmiştir. Belgenin önceki sayfaları asıl yayıncısına aittir ve içeriği değiştirilmemiştir; en güncel sürüm için belgenin yayıncısına başvurun.